HEAPS ARBORICULTURE

TREE • PLANNING • DEVELOPMENT SPECIALISTS

EST 1995

Arboricultural Impact Assessment
Method Statement & Tree Protection Plan
(to BS:5837 2012)

25 Christchurch Gardens, Reading
RG2 7AH

Prepared for Mr T Bird

Prepared by Trevor Heaps BSc, MICFor, RC. Arbor. A

Date: 19th October 2026

Ref: TH 6718

Institute of Chartered Foresters

Heaps Arboriculture Limited, Crofters, Upper Pennington, Hampshire SO41 8LB

T +44 (0) 7957 763 533 **E** hello@heapsarboriculture.co.uk

VAT Registration No.: 278444271 UTR: 9809312966 Company Registration: 09069765

www.heapsarboriculture.co.uk

AA Registered CONSULTANT trees.org.uk

Summary

It is proposed to add a vertical extension to the rear of the property and then to also extend the existing outbuilding.

No significant vegetation will need to be removed to facilitate these works.

Some basic tree protection measures and working methodology (in accordance with BS 5837:2012) will ensure the retained and third-party trees are not detrimentally affected during works.

The relationship between the proposal and trees is sustainable and will not result in any unreasonable pressure to carry out inappropriate tree works.

If the proposal is implemented in accordance with the recommendations laid out in this report, neither the trees or wider landscape will be adversely affected.

This is an arboriculturally defensible scheme and there are no (arboricultural) reasons why planning consent should not be granted.

It is considered that sufficient information has been provided to demonstrate that the proposed development is capable of being implemented without causing unacceptable harm to retained trees.

Should the Local Planning Authority require any additional arboricultural information, it is considered that this can appropriately be secured by planning condition, allowing the tree protection measures to be refined where necessary and the Arboricultural Method Statement to be updated and re-approved prior to the commencement of development.

This approach recognises that, during the early stages of the planning process, certain details—such as the precise routing of underground services, foundation design, or other engineering specifications—may not yet have been finalised and often require input from engineers or other specialists beyond the scope of arboricultural consultancy.

It is standard practice for a final Arboricultural Method Statement to be prepared following the grant of planning permission, incorporating the detailed construction information available at that stage and submitted to the Local Planning Authority for approval where required by planning condition.

© Heaps Arboriculture is the trading name of Trevor Heaps Arboricultural Consultancy Ltd.

Contents

1.0 Introduction 1

2.0 Instruction 1

3.0 Drawings provided. 1

4.0 Report context 1

5.0 Statutory tree protection 2

6.0 Ecological constraints 3

7.0 The site 3

8.0 The soil and topography 3

9.0 Arboricultural Impact Assessment (AIA) and Tree Protection Methods 3

10.0 Conclusions 6

11.0 The Arboricultural Method Statement (AMS) 6

12.0 Arboricultural supervision 8

13.0 Signature 9

Appendix 1 - Professional résumé 10

Appendix 2 - Tree data schedule 12

Appendix 3 - Tree data schedule explanatory notes 14

Appendix 4a – Specifications for generic tree protective measures 16

Appendix 5 – General precautions and further information 24

Appendix 6 - Procedure to follow in case of damage to retained trees 26

Appendix 7 - Induction form for all site personnel 27

Appendix 8 - Site inspection record 28

Appendix 9 - Tree Protection Plan/s ..... End of Report

© Heaps Arboriculture is the trading name of Trevor Heaps Arboricultural Consultancy Ltd.

1.0 Introduction

1.1 I am Trevor Heaps, Director of Trevor Heaps Arboricultural Consultancy Ltd. I hold a First-Class Honours Degree in Arboriculture; I am a Chartered Arboriculturist and a professional member of the Institute of Chartered Foresters; and I am also a Registered Consultant with the Arboricultural Association. Further information about my qualifications and experience is provided in Appendix 1.

1.2 Contact details:

Who	Name	Organisation	Details
Arboricultural Consultant	Trevor Heaps	Heaps Arboriculture, Crofters, Wainsford Road, Upper Pennington, SO41 8LB	Tel: 07957 763 533 trevor@trevorheaps.co.uk
Client	Mr T Bird		
Reading Borough Council - LPA	Tree Officer	Civic Offices, Bridge St, Reading RG1 2LU	Tel: 0118 937 3787 Website: http://www.reading.gov.uk/

2.0 Instruction

2.1 We are to survey all significant trees that could be affected by the proposed works.

2.2 We are then to prepare a report to appraise the effect these works will have on any nearby trees and the surrounding landscape.

2.3 We are then to set out recommendations for the protection of the trees during development - in accordance with British Standard 5837:2012 'Trees in relation to design, demolition and construction – Recommendations' (BS5837).

3.0 Drawings provided.

3.1 Site Block Plan – Ref. CCG25:001 Rev – Dated July 2026

4.0 Report context

4.1 The site was surveyed by Trevor Heaps on the 16th October 2026.

4.2 The trees were surveyed from within the site at ground level. No climbed inspections were carried out and no root/soil samples were taken for analysis.

© Heaps Arboriculture is the trading name of Trevor Heaps Arboricultural Consultancy Ltd.

4.3 The trees were inspected based on the Visual Tree Assessment (VTA) developed by Mattheck & Breloer (The Body Language of Trees, 1994).

4.4 Tree heights, crown spreads and stem diameters were measured with a clinometer, a Disto laser measure and a diameter measuring tape respectively.

4.5 Small trees and shrubs (with stem diameters less than 75mm) were not surveyed.

4.6 This report is based on the information provided (i.e. site plans, proposed drawings, scales, measurements etc.) and observations during the site visit.

4.7 This report will support a planning application and/or an application to discharge a tree-related condition, and its purpose is to assist and inform the planning process.

4.8 This report does not set out the detailed, working specifications of tree protection measures and engineering / design features, but provides sufficient detail to demonstrate the feasibility of the scheme in principle.

4.9 The report does not assess the potential influence of trees upon load-bearing soils beneath existing and proposed structures (resulting from water abstraction by trees on shrinkable soils).

5.0 Statutory tree protection

5.1 It is not clear from the Council's website, whether the trees within and adjacent to this site are covered by a Tree Preservation Order (TPO) or growing within a Conservation Area, and so it is advisable to make further inquiries before carrying out any tree works (unless the works are approved by virtue of this report being approved as part of a planning permission – but see 5.2).

5.2 Even if approved by way of this report, the Council's consent IS required for works on trees subject to a TPO / within a Conservation Area if:

- Development under a planning permission has not been commenced within the relevant time limit (i.e. the permission has 'expired');
- Only outline planning permission has been granted; or
- It is not necessary to carry out works on protected trees to implement a full planning permission.

© Heaps Arboriculture is the trading name of Trevor Heaps Arboricultural Consultancy Ltd.

6.0 Ecological constraints

6.1 The Wildlife and Countryside Act 1981 (as amended by the Countryside and Rights of Way Act 2000) provides statutory protection to birds, bats and other species that inhabit trees.

6.2 In addition to any tree matters considered in this report, these protected animals could impose significant constraints on the use and timing of access to the site.

7.0 The site

7.1 This property is situated within a leafy, residential part of Reading.

8.0 The soil and topography

8.1 The soils at this site were determined using information provided by the British Geological Survey and observations during the site visit.

8.2 The site is level with no adverse features, and the soil texture is London Clay Formation-Clay, silt and sand

8.3 Given the information above, the soil has the potential of becoming compacted (which is harmful to tree roots).

9.0 Arboricultural Impact Assessment (AIA) and Tree Protection Methods

9.1 The following section describes the potential effects the construction works will have on the subject trees. Mitigation measures are recommended, and this information should be read in conjunction with the supporting Tree Protection Plan (TPP).

9.2 Further information on the subject trees is provided in Appendices 2 & 3.

9.3 Physical damage to stems of retained trees

9.3.1 There is a risk that the crowns and stems of some of the retained trees could be accidentally damaged during development.

9.3.2 To minimise this risk, protective fencing will be erected in front of their stems and, where space allows, along their canopy extents.

© Heaps Arboriculture is the trading name of Trevor Heaps Arboricultural Consultancy Ltd.

9.4 Soil compaction around retained trees

9.4.1 Soil compaction can be caused by various construction-related activities such as storage or materials and the use of heavy machinery (or even heavier than normal pedestrian access during works). It is harmful to tree roots because it reduces gaseous exchange and the availability of water and nutrients.

9.4.2 To avoid the soil becoming unnecessarily compacted, all vulnerable areas will be separated from the working area by protective fencing or will be covered with ground protection.

9.4.3 The existing hard surfaces will provide ample protection for any roots growing beneath and so do not need reinforcing.

9.5 Foundations within RPA of retained trees

9.5.1 The excavations required for the new foundations will result in various (minor) incursions into the RPAs of Lime T5 and Laurel H6 (shown with orange shading on the TPP)

9.5.2 Section 5.3.1 (a) of BS 5837:2012 recommends that, if operations (in this case, excavations) are proposed within a tree's RPA then, the project arboriculturist should demonstrate that it can remain viable and that the area lost to encroachment can be compensated for elsewhere, contiguous with its RPA.

9.5.3 An RPA (shown as a dashed magenta circle around each tree) is an estimation of the minimum root system needed to sustain the condition of a tree (if all roots outside it were to be severed); it is not a measure of a tree's entire rooting system.

9.5.4 It is commonly accepted, within the arboricultural industry, that the RPA represents about a third of a tree's actual rooting system and, consequently, whilst the RPA is particularly important to ensure that there are no adverse effects on stability, if an encroachment does not significantly reduce the overall assimilative function of the root system, it is unlikely to cause harm.

9.5.5 Therefore, although there are incursions into the trees' RPAs (minimum root system to sustain them); the percentage of actual rooting systems affected is much less. Furthermore, it is possible to off-set these incursions within soft areas contiguous with their RPAs (within the surrounding parts of the garden and within the neighbouring gardens).

9.5.6 In terms of viability, research has shown that healthy trees of most species can withstand the loss of some roots (to a maximum of about 20% of the rooting area) with no long-term detrimental impact (Helliwell & Fordham 1992). None of the rooting areas affected are close to 20%.

© Heaps Arboriculture is the trading name of Trevor Heaps Arboricultural Consultancy Ltd.

9.5.7 The trees are healthy, and methodology has been provided in the appendices to minimise root disturbance.

9.5.8 So long as the methodology is followed, and the vulnerable parts of the trees' RPAs are protected during construction, they will not be adversely affected.

9.6 Potential conflict with low branches of retained trees

9.6.1 The overhanging lower lateral branches of Lime T5 are potentially vulnerable to damage during construction.

9.6.2 To reduce the risk of accidental damage to acceptable levels, the overhanging branches will be crown lifted to improve clearance (see appendix 2 for more specific details).

9.6.3 The proposed pruning is minor, targeted and in line with the applicant's common law rights. The pruning will not affect the health or appearance of the tree.

9.7 Underground services

9.7.1 The proposals will be designed in such a way as to either connect directly to existing underground services (with no further excavations) or be connected to existing services using a route outside the RPAs of trees shown retained.

9.7.2 If existing services within RPAs require upgrading, care shall be taken to minimise disturbance and where practicable, trenchless techniques employed; only as a last resort should open excavations be considered. Where existing services within RPAs are deemed not satisfactory for any further use, they should be left in situ rather than being excavated or removed.

9.7.3 If, for whatever reason, the proposed services need to be moved (and incursions into RPAs are unavoidable), then the installation works will be carried out under full arboricultural supervision and will, at the very least, comply with the methods and guidelines detailed in the document 'Street Works UK: Publications Volume 4 - Guidelines for the Planning, Installation and Maintenance of Utility Apparatus in Proximity to Trees': https://streetworks.org.uk/resources/publications/

© Heaps Arboriculture is the trading name of Trevor Heaps Arboricultural Consultancy Ltd.

9.8 Post Development Pressure

9.8.1 Leaves are likely to be blown onto the roof and guttering during the autumn (as they already will be).

9.8.2 To minimise any inconvenience this may cause, mesh or bristle filters will be fitted to the guttering, and the downpipes will be fitted with easily cleanable traps.

9.8.3 In the future, should any problems arise with the encroaching branches affecting the roof and guttering, the overhanging branches can be trimmed back.

10.0 Conclusions

10.1 No significant vegetation will need to be removed to facilitate these works.

10.2 The retained / third-party trees will be protected using up-to-date methodology and guidance provided by the current British Standards (BS 5837:2012). To this end, a site-specific AMS and TPP have been provided. These are found in Section 11 and Appendix 9 respectively.

10.3 Provided the recommendations laid out in this report are followed, the proposals will not detrimentally affect the trees or the character / appearance of the local area.

10.4 The trees do not cause any significant conflicts in terms of construction activities, nor will any significant issues of post-development pressure be likely to emerge that could not be managed with routine, minor tree maintenance.

11.0 The Arboricultural Method Statement (AMS)

11.1 Effective tree protection relies on following a logical sequence of events and arboricultural supervision. This AMS lays down the methodology for all construction works that may influence significant trees and recommendations for arboricultural supervision are provided in Section 12.

11.2 It is essential that this AMS is observed and adhered to. Therefore, a copy of this AMS must be issued to the building contractor to be integrated into their work schedule and must also be permanently made available on-site for the duration of development.

11.3 This AMS should be read in conjunction with the supporting Tree Protection Plan (TPP), which is found in Appendix 9.

© Heaps Arboriculture is the trading name of Trevor Heaps Arboricultural Consultancy Ltd.

11.4 At this site, operations are to occur in the following sequence (refer to Appendix 4 for further details on underlined methodology; which are listed in alphabetical order):

1. Carry out tree work operations highlighted yellow in the tree data schedule (Appendix 2). All tree works are to be carried out by a competent and experienced arborist to current British Standards (see Appendix 5.9 for assistance finding a suitable arborist).

2. Erect protective fencing along the position(s) shown by the dashed red line/s on the TPP.

3. Lay ground protection and/or retain suitably hard-wearing existing hard surfaces within the area(s) shown by the diagonal blue lines on the TPP.

4. Retain all existing hard surfaces as shown by the sandy coloured squares on the TPP.

5. Provide a photographic record of all tree protection to arboricultural consultant – this will be forwarded to and approved by the Council's Arboricultural Officer and must demonstrate that all aspects of tree and ground protection measures have been implemented in accordance with this Arboricultural Report. The tree protection measures shall be retained until completion of all works permitted.

6. Working from on top of existing hard surfaces and/or suitable ground protection, excavate traditional strip foundation trenches (methodology to be followed where orange shading is shown).

7. Commence construction.

8. Remove tree protection when all construction activity has ended.

9. Carry out landscaping works.

© Heaps Arboriculture is the trading name of Trevor Heaps Arboricultural Consultancy Ltd.

12.0 Arboricultural supervision

12.1 A suitably qualified arboriculturist will provide on-going supervision during construction. The occasions when supervision is required are outlined in Table 2. If the LPA wish to see further supervision, this matter can be dealt with by amending the report and/or by condition.

Table 2: Indicative arboricultural supervision requirements

Supervision details	Required (Y / N)	When	Details	Nature	Sign off
~~Meeting with tree contractors~~	~~N~~	~~Prior to protective measures being installed~~	~~To ensure tree work instructions are clear and understood.~~	~~Informal meeting~~	~~No follow up required~~
~~Pre-commencement site meeting~~	~~N~~	~~Prior to any site activity~~	~~To ensure contractors are briefed & understand the AMS & TPP. A site supervisor will be appointed to oversee tree protection & the reporting of any damage to trees or deviation from the AMS - to the project arboriculturist / LPA~~	~~Informal and open discussions. Induction form signed by attendees~~	~~Details of meeting to be sent to LPA within 5 days~~
Protective measure check	Y	Prior to any site activity	To ensure that protective measures are fit-for-purposed and correctly positioned.	Photos to be provided to consultant	Details of to be sent to LPA within 5 days
~~On-going supervision~~	~~N~~	~~Every 2 weeks during construction~~	~~To ensure that the protective measures have not been moved and continue to be fit-for-purpose.~~	~~Site meeting with a site monitoring report to be prepared~~	~~Details of to be sent to LPA within 5 days~~
~~Supervision of excavation works near trees~~	~~N~~	~~During construction~~	~~To supervise key stages of works near trees (insert which / when)~~	~~Site meeting with a site monitoring report to be prepared~~	~~Details of to be sent to LPA within 5 days~~
~~Meeting with landscape contractors~~	~~N~~	~~After construction~~	~~To provide advice on tree / shrub selection (if not conditioned)~~	~~Informal meeting~~	~~No follow up required~~

12.2 A site inspection record (see Appendix 8) will be prepared after each visit and will state the condition of tree protection measures and outline any required remedial action (and timescales).

12.3 To demonstrate compliance, and to help the LPA discharge relevant planning conditions, all site monitoring reports will be forwarded to the LPAs arboricultural officer within 5 working days of the visit.

12.4 NOTE: It is the applicant's responsibility to arrange meeting dates with the arboriculturist.

© Heaps Arboriculture is the trading name of Trevor Heaps Arboricultural Consultancy Ltd.

13.0 Signature

This report represents a true and factual account of the potential arboricultural impacts, and makes recommendations for appropriate protective measures, at the subject property.

Signed

.....

Trevor Heaps

Chartered Arboriculturist

BSc, MICFor, RC. Arbor. A

Dated

20th October 2026

© Heaps Arboriculture is the trading name of Trevor Heaps Arboricultural Consultancy Ltd.

Appendix 1 - Professional résumé

I am Trevor Heaps, Director of Trevor Heaps Arboricultural Consultancy Ltd.

I hold a First-Class Honours Degree and a Foundation Degree in Arboriculture. I am a Chartered Arboriculturist and a professional member of the Institute of Chartered Foresters (MICFor). I am also a Registered Consultant with the Arboricultural Association (R.C.Arbor.A).

I have worked within the arboricultural industry since 1995 and have extensive experience as a tree surgeon (arborist), tree officer, Tree Preservation Order (TPO) officer and arboricultural consultant.

Professional training and continuing professional development

- Standards and Development Day – AI in Arboriculture (AA Registered Consultants) – June 2026
- Standards and Development Day – Arboricultural Consultancy, Joint Mitigation Protocol, Professional Development and Tree Pests & Diseases – June 2025
- Standards and Development Day – Tree Decay Assessment (AA Registered Consultants) – June 2024
- Standards and Development Day – Tree Morphophysiology (AA Registered Consultants) – June 2023
- Registered Consultants' CPD Day – Subsidence Workshop (AA) – February 2023
- Standards and Development Day – including presentation by Duncan Slater (AA Registered Consultants) – June 2022
- National Tree Officers Conference – November 2019
- The Hollow Tree – Arboriculture – July 2018
- Aspiring Registered Consultants Day (AA) – May 2018
- Arboriculture and Bats: Scoping Surveys for Arborists (BCT & AA) – October 2017
- Tree Science Day – Tree Decay Organisms – June 2016
- Oak Processionary Moth (OPM) Training (FC) – May 2016
- Green Blue Urban Conference – Trees and Hard Surfaces – February 2016

© Heaps Arboriculture is the trading name of Trevor Heaps Arboricultural Consultancy Ltd.

- Visual Tree Assessment Workshop (AA) – October 2015
- Trees and the Law (Dr Charles Mynors) – June 2015
- Mortgage (Home Buyers) Report Writing (LANTRA / CAS) – February 2015
- Tree Preservation Orders – Effective Application (LANTRA / CAS) – November 2014
- Professional Tree Inspection, three-day course (LANTRA / AA) – July 2014
- Arboricultural Consultancy Course (AA) – May 2014
- Further Down the Subsidence Trail (AA) – April 2013
- Getting to Grips with Subsidence (AA) – November 2012
- BS 5837:2012 and New Tree Preservation Order Regulations (AA) – May 2012
- BS 3998:2010 – Tree Work Recommendations – January 2012
- Interpreting PiCUS Sonic Tomographs and Electrical Impedance Tomography – September 2010
- Quantified Tree Risk Assessment (QTRA) Workshop – September 2006

Professional organisation abbreviations

AA - Arboricultural Association
BCT – Bat Conservation Trust
CAS – Consulting Arborist Society
FC – Forestry Commission
ICF – Institute of Chartered Foresters

© Heaps Arboriculture is the trading name of Trevor Heaps Arboricultural Consultancy Ltd.

Appendix 2 - Tree data schedule

Ref	Name	Age	DBH (mm)	Hgt. (m)	Can. hgt. (m)	Can N (m)	Can E (m)	Can S (m)	Can W (m)	Physio cond.	Struct cond.	Life Exp.	Ret. Cat.	Comments	Rec's (proposed works are highlighted)
T1	Tilia X europaea (Common Lime)	M	850	22	3.5	9	9	7	7	Normal	Normal	40+	A2	Growing on third-party land (dbh estimated).	
T2	Acer pseudoplatanus (Sycamore)	EM	100	7	3	2	2	2	2	Normal	Normal	40+	C2	Growing on third-party land (dbh estimated).	
T3	Fraxinus excelsior (Ash)	EM	100	7	3	2	2	2	2	Normal	Normal	40+	C2	Growing on third-party land (dbh estimated).	
H4	Prunus laurocerasus (Cherry Laurel)	EM	100	4	1.5	1	1	1	1	Normal	Normal	40+	C2	Growing on third-party land (dbh estimated). Clipped boundary hedge.	
T5	Tilia X europaea (Common Lime)	M	500	12	3	3.8	3.8	3.8	3.8	Normal	Normal	40+	A2	Growing on third-party land (dbh estimated). Crown reduced in past.	Crown lift overhanging branches to 5m by tip-reducing low hanging branches. Only cuts of 75mm or below to be made
H6	Prunus laurocerasus (Cherry Laurel)	EM	100	3	0.5	1	1	1	1	Normal	Normal	40+	C2	Growing on third-party land (dbh estimated). Clipped boundary hedge.	
T7	Taxus baccata (Yew)	EM	150	4	1	4	1.5	4	4	Normal	Normal	40+	B2	Growing on third-party land (dbh estimated).	
T8	Tilia X europaea (Common Lime)	M	850	22	3.5	4	4	4	4	Normal	Normal	40+	A2	Growing on third-party land (dbh estimated).	

© Heaps Arboriculture is the trading name of Trevor Heaps Arboricultural Consultancy Ltd.

Ref	Name	Age	DBH (mm)	Hgt. (m)	Can. hgt. (m)	Can N (m)	Can E (m)	Can S (m)	Can W (m)	Physio cond.	Struct cond.	Life Exp.	Ret. Cat.	Comments	Rec's (proposed works are highlighted)
T9	Taxus baccata (Yew)	EM	150	4	1	4	1.5	4	4	Normal	Normal	40+	B2	Growing on third-party land (dbh estimated).	
T10	Taxus baccata (Yew)	M	200	8	1	2.5	2.5	1.5	2.5	Normal	Normal	40+	B2	Growing on third-party land (dbh estimated).	

© Heaps Arboriculture is the trading name of Trevor Heaps Arboricultural Consultancy Ltd.

Appendix 3 - Tree data schedule explanatory notes

This section explains the terms used in the **Tree data schedule** (Appendix 2).

Ref: Each item of vegetation has its own unique number, prefixed by a letter such that:

T1=Tree **S2**=Shrub or stump **G3**=Group **H4**=Hedge **W5**=Woodland

Species: Latin (and common names in brackets) are given.

Age:

- **Y - Young -** Usually less than 10 years' old
- **SM - Semi-mature -** Significant future growth to be expected, both in height and crown spread (typically below 30% of life expectancy)
- **EM - Early-mature -** Full height almost attained. Significant growth may be expected in terms of crown spread (typically 30-60% of life expectancy)
- **M - Mature -** Full height attained. Crown spread will increase but growth increments will be slight (typically 60% or more of life expectancy)
- **V - Veteran -** A level of maturity whereby significant management may be required to keep the tree in a safe condition
- **OM – Over-mature -** As for veteran except management is not considered worthwhile

DBH (mm): Stem diameter, measured in mm, taken at 1.5m above ground level where possible.

Hgt. (m): Height: Measured from ground level to the top of the crown in metres.

Can Hgt. (m): Crown height: Measured from ground level to the lowest tips of the main crown begins in metres. Where the crown is unbalanced it is measured on the side deemed to be most relevant. This is usually the side facing the area of anticipated development.

Can N, S, E, W: - Canopy extents
Approximate radial crown spread measured to the four cardinal points (for individual trees only)

Physio cond.: Indicates the physiological condition of the tree as one of the following categories:

- **Normal -** Healthy tree with no symptoms of significant disease
- **Fair -** Tree with early signs of disease, small defects, decreased life expectancy, or evidence of less-than-average vigour for the species
- **Poor -** Significant disease present, limited life expectancy, or with very low vigour for the species and evidence of physiological stress
- **Very poor -** Tree is in advanced stages of physiological failure and is dying
- **Dead -** No leaves or signs of life

© Heaps Arboriculture is the trading name of Trevor Heaps Arboricultural Consultancy Ltd.

Struct cond.: Indicates the structural condition of the tree as one of the following categories:

- **Normal** - No significant structural defects noted
- **Fair** - Some structural defects noted but remedial action not required at present
- **Poor** - Significant defects noted resulting in a tree that requires regular monitoring or remedial action
- **Very poor** - Major defects noted that compromise the safety of the tree. Remedial works or tree removal is likely to be required.
- **Dead** - No leaves or signs of life

Life Exp.: The estimated number of years before the tree may require removal (<10), (10 – 20), (20 – 40), or (40+).

Ret. Cat.: - Retention category: BS5837:2012 Category where:

- **U = Trees unsuitable for retention**. Trees in such a condition that cannot realistically be retained as living trees in the context of the current land use for longer than 10 years. These trees are shown on the tree plans with red centres.

- **A = Trees of high quality**. Trees of high quality with an estimated remaining life expectancy of at least 40 years. These trees are shown on the tree plans with green centres.

- **B = Trees of moderate quality**. Trees of moderate quality with an estimated remaining life expectancy of at least 20 years. These trees are shown on the tree plans with blue centres.

- **C = Trees of low quality.** Trees of low quality with an estimated remaining life expectancy of at least 10 years, or young trees with a stem diameter below 150mm. These trees are shown on the tree plans with grey centres.

Trees of notable quality are graded as Category A or Category B. These trees are sometimes divided further into sub-categories:

- Sub-category 1 is allocated where it has been assessed that the tree has mainly arboricultural qualities.
- Sub-category 2 is allocated where it is assessed that the tree has mainly landscape qualities.
- Subcategory 3 is allocated where it is assessed that the tree has mainly cultural qualities, including conservation.

Trees may be allocated more than one sub-category. All sub-categories carry equal weight, with for example an A3 tree being of the same importance and priority as an A1 tree.

Comments: Tree form and pruning history are also recorded along with an account of any significant defects.

Rec's - Recommendations: Usually based on any defects observed and intended to ensure that the tree is in an acceptable condition.

© Heaps Arboriculture is the trading name of Trevor Heaps Arboricultural Consultancy Ltd.

Appendix 4a – Specifications for generic tree protective measures

Ground Protection

The following *italicised* text is based on an extract from British Standard 5837:2012 - Trees in relation to design, demolition and construction– Recommendations.

Temporary ground protection should be able to support any traffic entering or using the site without being distorted or causing compaction of underlying soil and might comprise one of the following:

a) for pedestrian-movements only, a single thickness of scaffold boards placed either on top of a driven scaffold frame, to form a suspended walkway, or on top of a compression-resistant layer (e.g. 100 mm depth of woodchip), laid onto a geotextile membrane;

b) for pedestrian-operated plant up to a gross weight of 2 t, proprietary, inter-linked ground protection boards placed on top of a compression-resistant layer (e.g. 150 mm depth of woodchip), laid onto a geotextile membrane;

c) for wheeled or tracked construction traffic exceeding 2 t gross weight, an alternative system (e.g. proprietary systems or pre-cast reinforced concrete slabs) to an engineering specification designed in conjunction with arboricultural advice, to accommodate the likely loading to which it will be subjected.

The location of the temporary ground protection is shown on the tree protection plan and detailed within the arboricultural method statement.

In all cases, the objective will be to avoid the unnecessary compaction of soil (which can arise from a single passage of a heavy vehicle, especially in wet conditions) so that tree root functions remain unimpaired.

All ground protection is to be maintained in good order, so it is fit for purpose throughout development. The ground protection will not be altered in any way, or prematurely removed without prior consent of the project arboriculturist or the LPA arboricultural officer.

© Heaps Arboriculture is the trading name of Trevor Heaps Arboricultural Consultancy Ltd.

Figure 1: An example of ground protection on work areas within a RPA (BS 5837:2005).

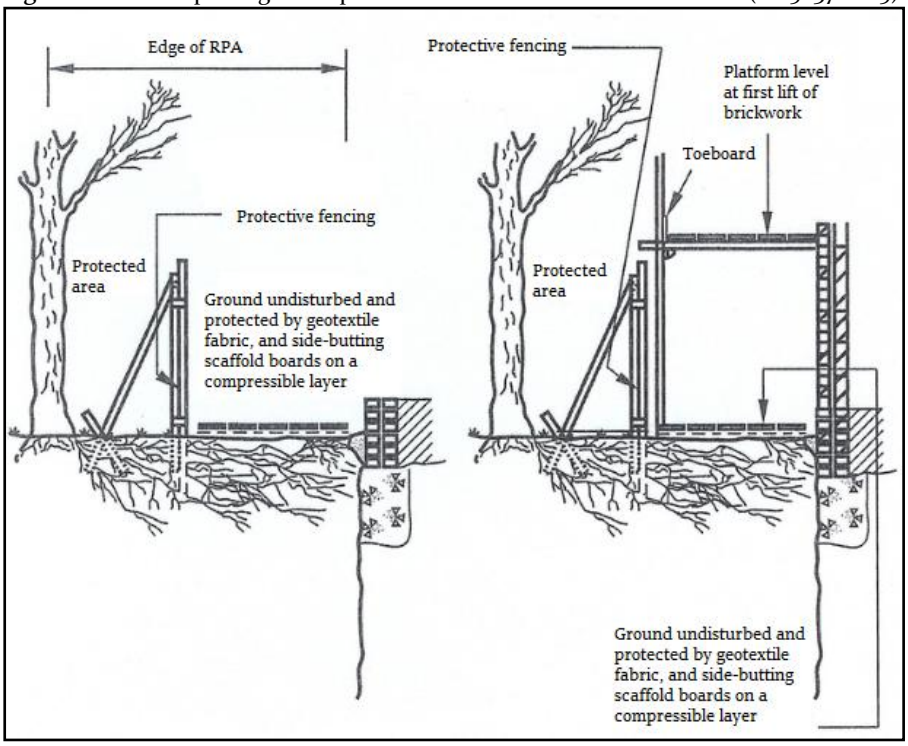

Photo 1. Scaffold boards placed on woodchip

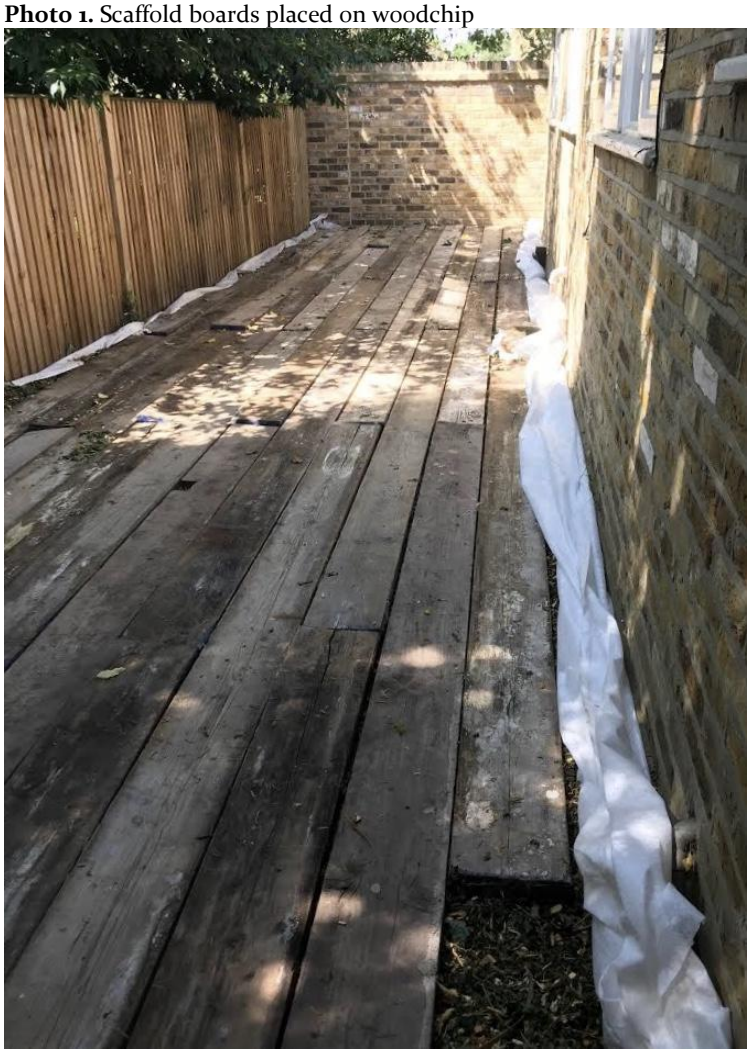

© Heaps Arboriculture is the trading name of Trevor Heaps Arboricultural Consultancy Ltd.

Photo 2. An example of heavy-duty ground protection.

Photo 2 Scaffold framework supporting wooden boards

© Heaps Arboriculture is the trading name of Trevor Heaps Arboricultural Consultancy Ltd.

Protective fencing

The following is based on an extract from British Standard 5837:2012 - Trees in relation to design, demolition and construction– Recommendations.

The framework support (shown in Figure 2 and photo 1) is the usual method of support for 'Heras' fencing. Some variations are possible if site conditions are appropriate; i.e. support by wooden posts (75mm x 75mm x 2.75m) dug or concreted into the ground (dry mix concrete contained within a plastic bag), or if there is no pressure for access, a lighter form of netting on stakes.

Figure 2: Default specification for protective barrier (BS 5837:2012)

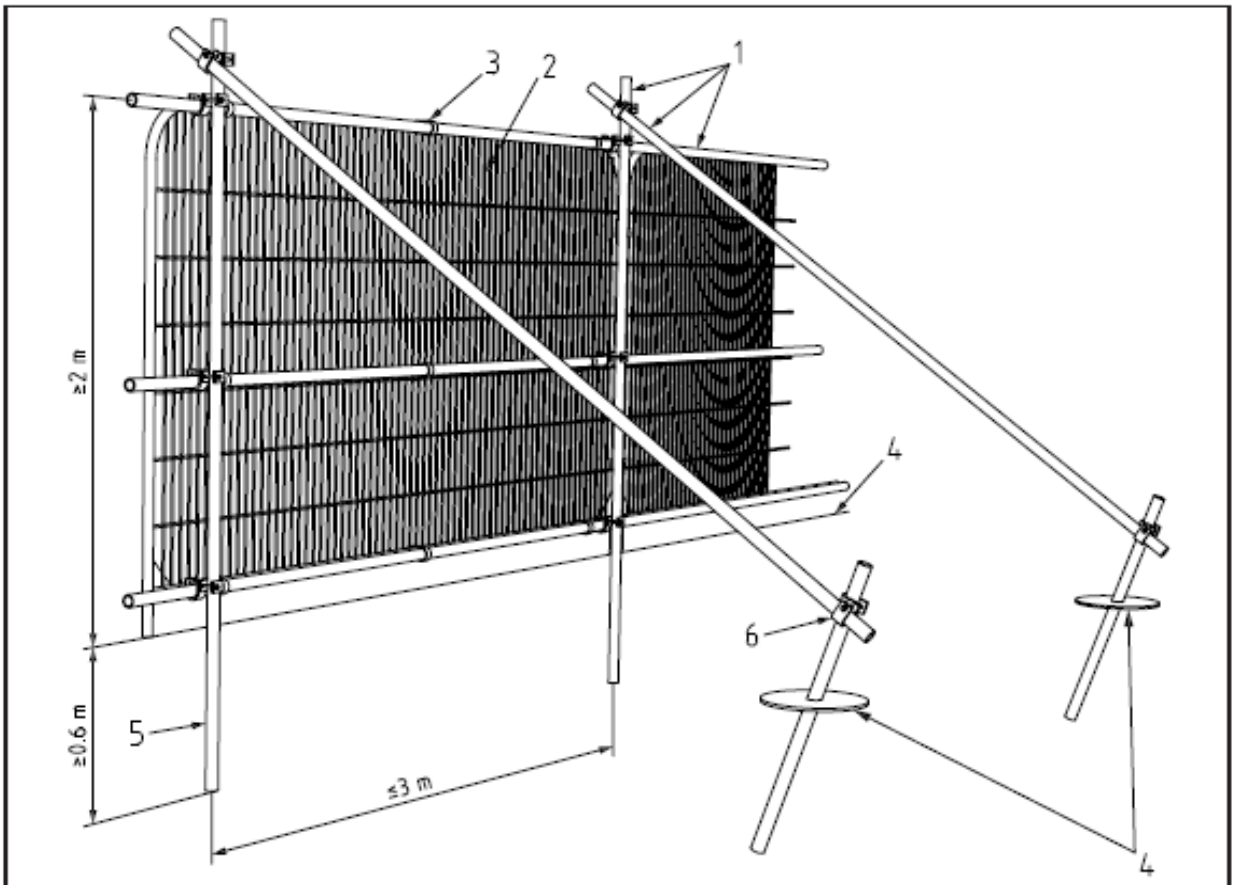

Key

1 Standard scaffold poles
2 Heavy gauge 2 m tall galvanized tube and welded mesh infill panels
3 Panels secured to uprights and cross-members with wire ties
4 Ground level
5 Uprights driven into the ground until secure (minimum depth 0.6 m)
6 Standard scaffold clamps

© Heaps Arboriculture is the trading name of Trevor Heaps Arboricultural Consultancy Ltd.

Photo 1: A worked example of the default specification for protective barrier (BS 837:2012)

Durable, all-weather signs are to be attached to the fencing (an example sign is provided below). These shall be printed, laminated and attached at regular intervals along the fencing.

Once erected, the protective fencing is to be regarded as sacrosanct and there is to be no access into the area protected by it - the construction exclusion zone (CEZ).

The protective fencing is to be maintained in good order, so it is fit for purpose throughout the construction process. The fencing will not be altered in any way, or prematurely removed without prior consent of the project arboriculturist and/or (if necessary) the LPA arboricultural officer.

Where specified in the AMS, the tree(s) stem/s shall be boxed off with wooden ply boards or wrapped in hessian and chestnut pale fencing / trunk protection (see example below). This will help avoid any direct damage to tree stems from passing machinery (see photo 2).

© Heaps Arboriculture is the trading name of Trevor Heaps Arboricultural Consultancy Ltd.

Photo 2: Trees protected by hessian & chestnut pale fencing / limbs protected by wooden boxing

Photo 2. https://greengridsystems.com/products/trunk-protecta

© Heaps Arboriculture is the trading name of Trevor Heaps Arboricultural Consultancy Ltd.

TREE PROTECTION FENCING

KEEP OUT

This fencing must not be removed

or altered in any way without prior consultation with the project arboriculturist!

Please report any damage to trees and/or fencing to the site manager or the project arboriculturist

Trevor Heaps

07957 763 53

© Heaps Arboriculture is the trading name of Trevor Heaps Arboricultural Consultancy Ltd.

Soft landscaping within or close to the Root Protection Areas (RPAs) of retained trees

The following precautions are necessary to avoid damage to trees (where activities are to take place within their RPAs):

- Ground levels will not be changed;
- Soil must be of good quality and free of contaminants and other foreign objects potentially injurious to tree roots. The topsoil must satisfy the requirements of BS 3882:2015 – Specification for topsoil.
- No heavy machinery will be operated within the RPAs of retained trees during the installation of soft landscaping;
- Unwanted vegetation shall be removed manually or by using systemic herbicide that will not damage tree roots;
- No fuels or chemicals shall be used or stored within these areas; and
- No irrigation or drainage pipes shall be installed within the RPAs

© Heaps Arboriculture is the trading name of Trevor Heaps Arboricultural Consultancy Ltd.

Appendix 5 – General precautions and further information

Figure 4: Common problems for trees on development sites
(http://www.leics.gov.uk/highway_req_development_part7_appendix_f)

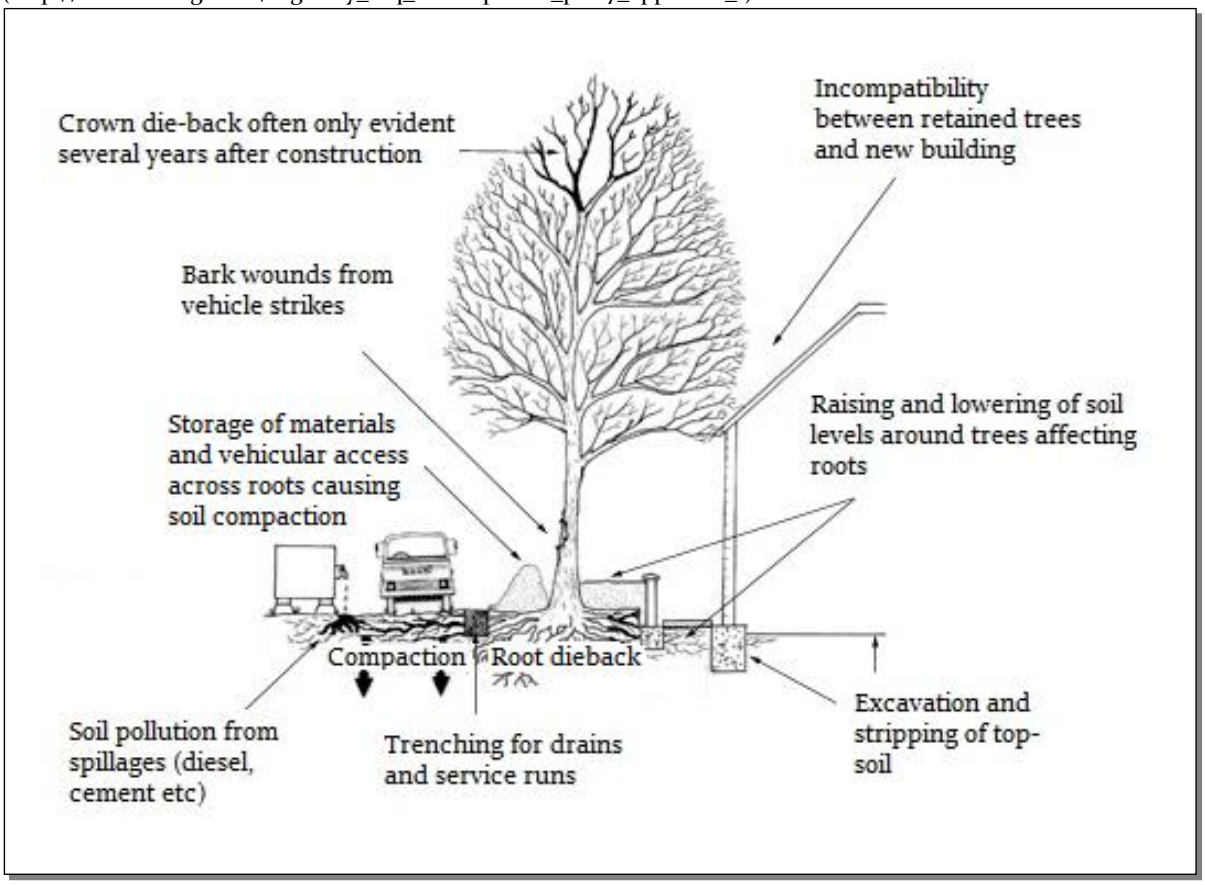

5.1 Services and drainage: Surface run-off water shall be sent to existing drains and/or soakaways located outside the RPAs of retained tree(s). If trenching is required within the RPA of retained trees to provide routes for services, this work shall be undertaken using mole boring and / or hand digging (under arboricultural supervision).

5.2 Storage of materials: No materials or spoil are to be stored within areas protected by protective fencing and/or ground protection. The same applies for existing hard surfaces that are being used as ground protection.

5.3 Spillages: If any cement residues fall within root protection areas, it shall be swept up, bagged and removed from site – it shall <u>not</u> be washed away with water.

5.4 Demolition: Where any existing structures are to be demolished, they will be done so inwardly (away from root protection areas / retained soil).

© Heaps Arboriculture is the trading name of Trevor Heaps Arboricultural Consultancy Ltd.

5.5 Levels: There is to be no alteration of ground levels within the area protected by protective fencing and/or ground protection, unless previously specified and agreed upon. The same applies for existing hard surfaces that are being used as ground protection.

5.6 Fires: No fires are to be lit within 20 metres of the stems of retained trees.

5.7 Above ground damage to trees: Care must be taken in planning the location and operation of machinery to avoid above ground damage to trees. BS5837 (2012) Section 6.2.4.1 states '*Planning of site operations should take sufficient account of wide loads, tall loads and plant with booms, jibs and counterweights (including drilling rigs) in order that they can operate without contacting retained trees. Such contact can result in serious damage to trees and might make their safe retention impossible. Consequently, any transit or traverse of plant in proximity to trees should be conducted under the supervision of a banksman, to ensure that adequate clearance of trees is always maintained. Access facilitation pruning should be undertaken where necessary to maintain this clearance.*

5.8 Remedial works and soil improvement: Exposed soils are easily compacted resulting in loss of water and gaseous exchange; this can lead to root death (and subsequently tree death).

5.8.1 To relieve ground compaction, which may have resulted from the use of vehicles or by the storage of materials, the soils should be broken up to allow air to penetrate and for the soil structure to be restored. There are various methods to achieve this, such as: auguring the soil by hand / fork or pneumatic excavation (e.g. with an air spade); both should be combined with soil structure improvements (see 5.8.2).

5.8.2 The soil structure can be improved by incorporating a compost or mulch within the topsoil, of 75-100mm in depth. This can be spread over the surface and gently forked into the soil. If bark chip is used as mulch, NPK fertilizer should be added to counteract the nitrogen depletion of the soil. There is also the option of adding mycorrhizal fungal which may also improve root function.

5.9 Choosing an arborist: When appointing a tree works contractor, please only use properly qualified and experienced companies who comply with current British Standards (3998) and always check that they carry Public Liability Insurance within a minimum of £2,000,000 cover, and the relevant Employers Liability Insurance. A list of contractors approved by the Arboricultural Association can be found at www.trees.org.uk or by calling 01242 522 152.

© Heaps Arboriculture is the trading name of Trevor Heaps Arboricultural Consultancy Ltd.

Appendix 6 - Procedure to follow in case of damage to retained trees

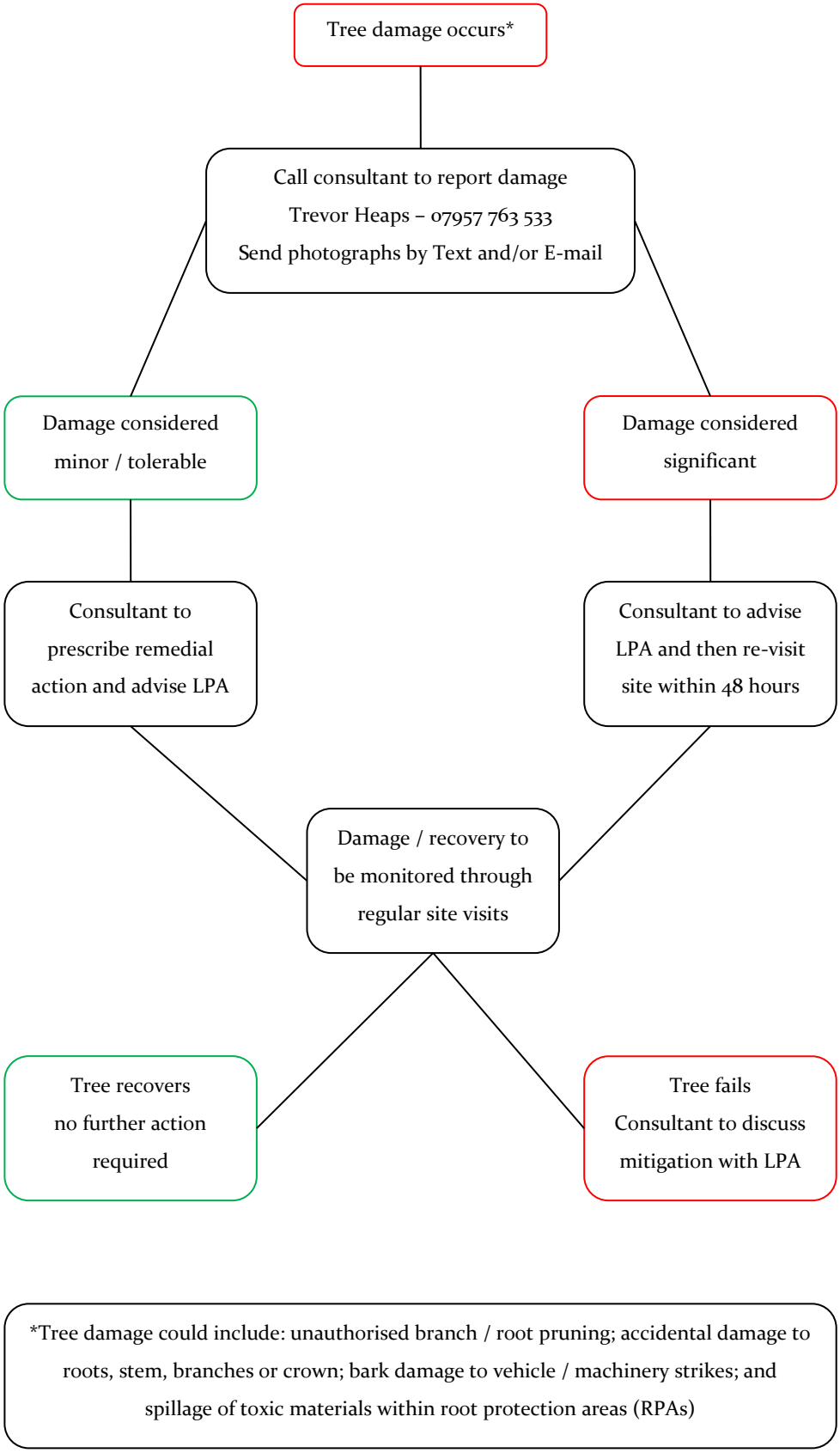

*Tree damage could include: unauthorised branch / root pruning; accidental damage to roots, stem, branches or crown; bark damage to vehicle / machinery strikes; and spillage of toxic materials within root protection areas (RPAs)

© Heaps Arboriculture is the trading name of Trevor Heaps Arboricultural Consultancy Ltd.

Appendix 7 - Induction form for all site personnel

Site name: .....

App. No.: .....

Appointed Site Supervisor: .....

- I have had explained to me by the Site Manager the key implications of the Arboricultural Method Statement relating to the development at the above site.
- I am aware that trees have shallow roots and any excavation works beneath the canopy could cause irreparable damage.
- I am aware that the tree protective fencing / ground protection must remain in its original position and must not be moved without the approval of the appointed Arboricultural Consultant.
- I understand that certain operations must be supervised by the appointed Arboricultural Consultant and that these must not start until the consultant is present and has given approval.
- I confirm that I will bring any concerns about potential damage to trees to the attention of the Site Manager.
- I am aware that I must not cause damage to any of the retained trees on or adjacent to the site. Damage may be caused by direct means (i.e. physical damage caused to roots or the trunk/branches of the tree) or by indirect means (e.g. by fire or toxic materials entering the rooting environment of the tree).

Print Name: .....

Sign Name: .....

Date: .....

© Heaps Arboriculture is the trading name of Trevor Heaps Arboricultural Consultancy Ltd.

Appendix 8 - Site inspection record

Date: Time: ..... Site:	Planning reference: .....

Those present in addition to project arboriculturist:

Client / Agent: .....

Project / Site manager: .....

LPA arboricultural officer: .....

Other (specify): .....

	Yes	No	Notes
Tree protection measures located in accordance with TPP?			
Any disturbance within construction exclusion zone?			
Any materials stored within construction exclusion zone?			
Any evidence of damage to tree roots, stems or canopies?			
Any works programmed before next planned site visit that may affect retained trees? (if yes, provide details below)			

Additional site visit required to ensure compliance with required action? (Y / N)
Proposed visit date:

Signed: Date:

© Heaps Arboriculture is the trading name of Trevor Heaps Arboricultural Consultancy Ltd.

Appendix 9: Tree Protection Plan

At this site, operations are to occur in the following sequence:

1. Carry out tree work operations highlighted yellow in the tree data schedule (Appendix 2). All tree works are to be carried out by a competent and experienced arborist to current British Standards (see Appendix 5.9 for assistance finding a suitable arborist).

2. Erect protective fencing along the position(s) shown by the dashed red line/s on the TPP.

3. Lay ground protection and/or retain suitably hard-wearing existing hard surfaces within the area(s) shown by the diagonal blue lines on the TPP.

4. Retain all existing hard surfaces as shown by the sandy coloured squares on the TPP.

5. Provide a photographic record of all tree protection to arboricultural consultant - this will be forwarded to and approved by the Council's Arboricultural Officer and must demonstrate that all aspects of tree and ground protection measures have been implemented in accordance with this Arboricultural Report. The tree protection measures shall be retained until completion of all works permitted.

6. Working from on top of existing hard surfaces and/or suitable ground protection, excavate traditional strip foundation trenches (methodology to be followed where orange shading is shown).

7. Commence construction.

8. Remove tree protection when all construction activity has ended.

9. Carry out landscaping works.

Some seemingly innocuous construction-related activities can cause damage to tree roots and can also result in chemicals leaching into the soil.

All materials will be stored away from the RPAs of retained trees or, if this is not possible, will be stored upon existing hard surfaces and/or suitable ground protection.

All cement / mortar mixing will take place away from the RPAs of retained trees and will be contained within a 'tuff tray' or a bunded area.

Note: The point of a tree protection plan is to avoid soil compaction occurring. If more space is needed, the fencing can be shifted back as long as the ground protection covers the area exposed. Any changes to the tree protection should however be discussed with the consultant or tree officer.

Temporary ground protection should be able to support any traffic entering or using the site without being distorted or causing compaction of underlying soil and might comprise one of the following:

1. For pedestrian-movements only, a single thickness of scaffold boards placed either on top of a driven scaffold frame, to form a suspended walkway, or on top of a compression-resistant layer (e.g. 100 mm depth of woodchip), laid onto a geotextile membrane;

2. For pedestrian-operated plant up to a gross weight of 2 t, proprietary, inter-linked ground protection boards placed on top of a compression-resistant layer (e.g. 150 mm depth of woodchip), laid onto a geotextile membrane;

3. For wheeled or tracked construction traffic exceeding 2 t gross weight, an alternative system (e.g. proprietary systems or pre-cast reinforced concrete slabs) to an engineering specification designed in conjunction with arboricultural advice, to accommodate the likely loading to which it will be subjected.

NOTE: If ground protection is to be laid near areas to be excavated, sheet piling should be used to shore up the sides of the excavations prior to being used (by pedestrians or machinery)

Default specification for protective fencing

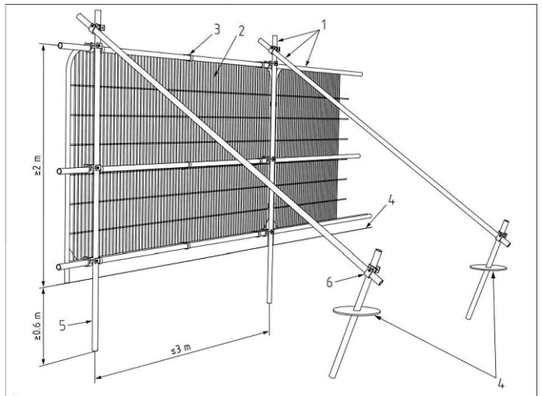

Key
1 Standard scaffold poles
2 Heavy gauge 2 m tall galvanized tube and welded mesh infill panels
3 Panels secured to uprights and cross-members with wire ties
4 Ground level
5 Uprights driven into the ground until secure (minimum depth 0.6 m)
6 Standard scaffold clamps

NOTE: It might be possible to move the protective fencing slightly to provide more working / storage / office space, but this will need to be confirmed with the arboricultural consultant first. IF agreeable, suitable ground protection (details provided in the appendices) will need to be laid over the exposed RPAs.

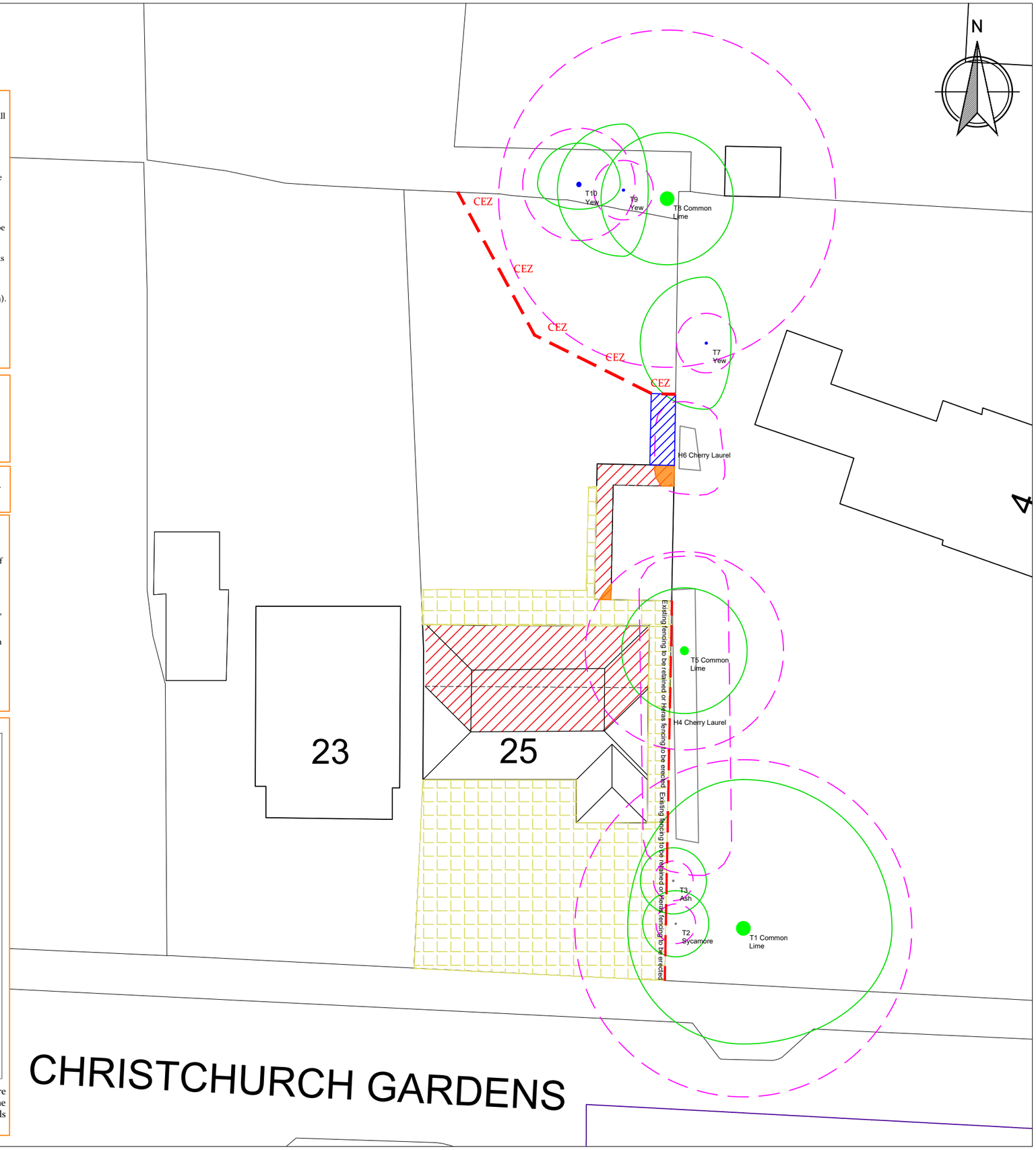

Plan Legend

- Tree/s to be retained
- Tree/s to be removed
- Category A Tree
- Category B Tree
- Category C Tree
- Category U Tree
- Root Protection Area (RPA) If amended, the original is a dotted blue circle
- Protective fencing
- Stem boxed in with wooden plyboards to avoid accidental damage
- CEZ — Construction & storage exclusion zone
- Existing hard surface
- Ground protection or existing hard surface to remain
- RPA Incursion. See supporting report / plan notes
- Existing hard surface during construction. 'No-dig', permeable surface after
- 'No-dig', permeable surface constructed before work begins
- Ground protection during construction. 'No-dig', permeable surface after
- 'No-dig', permeable surface constructed at landscaping stage
- Location of proposed service trench
- Suggested tree planting locations

Plan Ref: .....

Scale: 1:250 @ A3 (0 – 5m – 10m)

Site Address: 25 Christchurch Gardens
Reading RG2 7AH

Client: Mr T Bird
Drawing No: TH/A3/6718/TPP

Date: 19/10/2026

Trevor Heaps
Arboricultural Consultancy Ltd
07957 763 533
trevor@trevorheaps.co.uk
www.trevorheaps.co.uk

End of Report