STONE & BRICK
SOLUTIONS
REPORTS AND ASSESSMENTS

ENVIRONMENTAL NOISE SURVEY

81 London Street
Reading, RG1 4QA

25/04/2026

105 Eade road London N4 1TJ
Email info@stone-brick.co.uk

REPORT No: 81LR220426RG14QA **Date:** 22-23 April 2026

CLIENT PROJECT REFERENCE
81 London Street, Reading, RG1 4QA

ENVIRONMENTAL NOISE SURVEY

PREPARED FOR:

81 London Street, Reading, RG1 4QA

PREPARED BY:

Mr Salih K. Hassan

Senior Acoustic Consultant
BSc, BEng (Hons), MSc, MIOA, MIEE, LDip, MSLL, MTCEA, MCIBSE, CEng.
IOA Registration No. 30878
IEE Registration No. 16695640
MCIBSE No 5628
Engineering Council No. 510932

CHECKED BY

Dr Haydar Aygun (PhD, MSc, BSc, FIOA, MASA**)**
Associate Professor of Acoustics and Ventilation
Fellow Member of the Institute of Acoustics
Member of the Acoustical Society of America

Signed: Salih K Hassan **Date:** 25/04/2026

Contents

1. Summary 3
2. Introduction 4
2.1. Proposal 4
2.2. Reason for Assessment 4
2.3. Assessment Standards & Justification 4
2.3.1 BS8233 (2014) Guidance 4
2.4. Measurements 4
2.5. Sound Insulation and Noise Impact Assessment 4
2.6. Site & Measurement Location 5
3. Environmental Noise Survey 5
3.1. Source under Investigation 5
3.2. Weather Conditions 5
3.3. Measurement Equipment 5
3.4. Measurement Results 5
3.5. Observation 7
3.6. Uncertainty 8
4. BS8233:2014 Noise Assessment 8
4.1. Criteria 8
4.2. External Noise Analysis 8
4.3. Internal Noise Levels 8
4.4. Daytime Internal Noise Levels 8
4.5. Night-time Internal Noise Levels 9
4.6. External Amenity Noise Levels 9
5. Vibration 9
6. Sound Insulation Scheme 9
6.1. Sound Insulation Assessment for floors and party walls 9
7. Overheating 11
8. Conclusion 11
9. References 13
10. Appendixes 13
10.1. Appendix A: Equipment details 13
10.2 Appendix B: Calibration Details and measurement set-up 13
10.3 Appendix C: Third Floor Flat 1 14
10.4 Appendix D: Third Floor Flat 2 17
10.5 Appendix E: Building Regulations Approved Document E 20
10.6 Appendix F: Acoustics terminology 20
10.7 Appendix G: Plans for proposed flats 22

1. Summary

An environmental noise impact assessment was carried out at the premises at 81 London Street, Reading, RG1 4QA, started on Wednesday 22nd April 2026 and finished on Thursday 23rd April 2026 in order to determine internal noise levels of the proposed flats. A BS8233 noise assessment was carried out at the site. All worst-case situations were considered for this assessment.

A rigorous calculation method that is given in BS8233 and based on measured environmental noise levels, was used to determine interior noise levels in the proposed flats. In accordance with BS8233:2014 guidance, the results shown in table below shows that;

- The day internal noise levels in living rooms are within the desirable category of 35dB(A) $L_{Aeq,16hr}$.
- The night internal noise levels in bedrooms are in the desirable category of 30dBA $L_{Aeq,8hr}$.
- The maximum individual noise events in bedrooms do not exceed 45dB(A) L_{AFmax} of the desirable category.

A summary of internal noise levels of the proposed flats is given in table below.

3rd Floor Flat-1 (100.22m²)				
Internal Space	**Noise Parameter**	**Internal Noise Level**	**BS8233 Limit**	**Within Desirable Limit (BS8233)**
L/D/K (22.45m²)	Daytime $L_{Aeq,16hr}$	26	35	**Yes**
Master Bedroom (15.5m²)	Night-time $L_{Aeq,8hr}$	25	30	**Yes**
Master Bedroom (15.5m²)	Night-time L_{AFmax}	40	45	**Yes**
3rd Floor Flat-2 (106.25m²)				
Internal Space	**Noise Parameter**	**Internal Noise Level**	**BS8233 Limit**	**Within Desirable Limit (BS8233)**
L/D/K (22.45m²)	Daytime $L_{Aeq,16hr}$	26	35	**Yes**
Master Bedroom (16.68m²)	Night-time $L_{Aeq,8hr}$	24	30	**Yes**
Master Bedroom (16.68m²)	Night-time L_{AFmax}	40	45	**Yes**
L/D/K means Living/ Dining/Kitchen Area				

The results given in Table above demonstrate that the predicted indoor ambient noise levels, $L_{Aeq,16hr}$ for day, $L_{Aeq,8hr}$ for night and L_{AFmax} for night in the proposed flats do not exceed the guideline values that are set in Table 4 of BS8233:2014.

We can confirm that the predicted internal ambient noise levels are within the standards set out in BS8233:2014 guidance.

Also, we can confirm that there were not any structural borne noise and vibration from the noise sources nearby the site.

2. Introduction

2.1. Proposal

An environmental noise survey was carried out to assess noise levels at 81 London Street, Reading, RG1 4QA, started on Wednesday 22nd April 2026 and finished on Thursday 23rd April 2026. This noise survey was prepared to support an outline application for *change of use of the third floor from office space to residential, the creation of two 3-bedrooms flats* with access secured, and all other matters reserved. The site has three floors including a ground floor. The site is located on London Street.

2.2. Reason for Assessment

A noise assessment is required to specify mitigation measures to ensure environmental noise levels do not exceed guideline internal/external noise levels, as listed in BS8233:2014.

2.3. Assessment Standards & Justification

2.3.1 BS8233 (2014) Guidance

BS8233:2014 Soun Insulation and Noise Reduction for Buildings Guidance contain useful advice relevant to the planning and design of new development, including new noise-sensitive development such as housing. BS8233 advocates a systematic approach to acoustic design as follows: i) assess the site, identify significant existing and potential noise sources, measure or estimate noise levels, and evaluate layout options. ii) Determine design noise levels for spaces in and around the building(s); iii) Determine sound insulation of the building envelope, including the ventilation strategy; iv) Identify internal sound insulation requirements; v) Identify and design appropriate noise control measures; and vi) Establish quality control and ensure good quality workmanship.

Section 5 of BS8233:2014 contains guidance on the sequence of stages to be followed in the planning and early acoustic design of a new development. Section 5.4 of BS8233:2014 outlines a general approach to determining appropriate noise control measures including the following suggested steps (which may be iterative): i. Check the feasibility of reducing noise levels and/or relocating noise sources. ii. Consider options for planning the site or building layout. iii. Consider the orientation of proposed building(s). iv. Select construction types and methods for meeting building performance requirements. v. Examine the effects of noise control measures on the requirements for ventilation, fire regulation, health and safety, cost, construction, design and management etc. vi. Assess the viability of alternative solutions. The designer should then decide which of the following options could be applied to reduce noise levels: i. Quietening or removing the source of noise. ii. Attenuating the sound on its path to the receiver. iii. Obstructing the sound path between source and receiver. iv. Improving the sound insulation of the building envelope. v. Using agreements to manage noise.

2.4. Measurements

Environmental noise survey was undertaken at the site in order to assess environmental noise emissions. The sound level meter was positioned at minimum 1 metre away from the front window of third floor.

2.5. Sound Insulation and Noise Impact Assessment

2.5.1 Sound Insulation Assessment

The Building Regulations Approved Document E require a minimum sound insulation value of 43 dB ($D_{nTw} + C_{tr}$ dB) for floors, stairs, and walls, and 64 dB ($L_{nT,w}$ dB) for floor, and stairs of dwelling-houses and flats formed by material change of use (See Appendix E). The outcome

summarised in Table 1 was achieved by using assumed standard construction details as specified in Appendix C, and Appendix D for the building façade.

Table 1: Noise Assessment Outcome

	3rd Floor Flat-1 (100.22m²)			
Internal Space	**Noise Parameter**	**Internal Noise Level**	**BS8233 Limit**	**Within Desirable Limit (BS8233)**
L/D/K (22.45m²)	Daytime $L_{Aeq,16hr}$	26	35	**Yes**
Master Bedroom (15.5m²)	Night-time $L_{Aeq,8hr}$	25	30	**Yes**
Master Bedroom (15.5m²)	Night-time L_{AFmax}	40	45	**Yes**
	3rd Floor Flat-2 (106.25m²)			
Internal Space	**Noise Parameter**	**Internal Noise Level**	**BS8233 Limit**	**Within Desirable Limit (BS8233)**
L/D/K (22.45m²)	Daytime $L_{Aeq,16hr}$	26	35	**Yes**
Master Bedroom (16.68m²)	Night-time $L_{Aeq,8hr}$	24	30	**Yes**
Master Bedroom (16.68m²)	Night-time L_{AFmax}	40	45	**Yes**
L/D/K means Living/ Dining/Kitchen Area				

2.6. Site & Measurement Location

The site is located in city centre, in a mixture of commercial and residential area on London Street which is a busy road with a mixture of retail, commercial and multiple cafes/restaurants lining the street on both sides. Noise levels were measured 1metre away from the third-floor front window of the site.

3. Environmental Noise Survey

3.1. Source under Investigation

The noise source identified on-site was road traffic noise from London Street and East Street, pedestrian noise, shoppers' noise, and customers' noise from commercial businesses nearby the site. Road traffic noise from London Street was dominant noise source during measurement.

3.2. Weather Conditions

Weather conditions were noted to be 6 degrees Celsius with clear sunny skies at the beginning of the measurements with a light wind, which was less than 5m/s, and 7 degrees Celsius at the end of the measurements with a mostly cloudy sky and a wind, which was less than 4m/s. These weather conditions were checked against and confirmed using the Meteorology Office mobile application available on smart phone technology.

3.3. Measurement Equipment

Measurement equipment that was used for the survey complies with accuracy requirements for common environmental noise measurement standards. The noise monitoring equipment was calibrated before and after the measurements. No significant drift was recorded. A detailed equipment list is given in **Appendix A** with calibration information in **Appendix B.**

3.4. Measurement Results

Daytime noise level: The results from the measurements taken at the site, 16-hour noise level (dB $L_{Aeq,16hr}$) are summarised in the Table 2 and graphically in Figure 1. The measured spectral

data (dB $L_{eq,16hr}$) for the daytime is used to give a broadband noise level that is equal to dB $L_{Aeq,16hr}$.

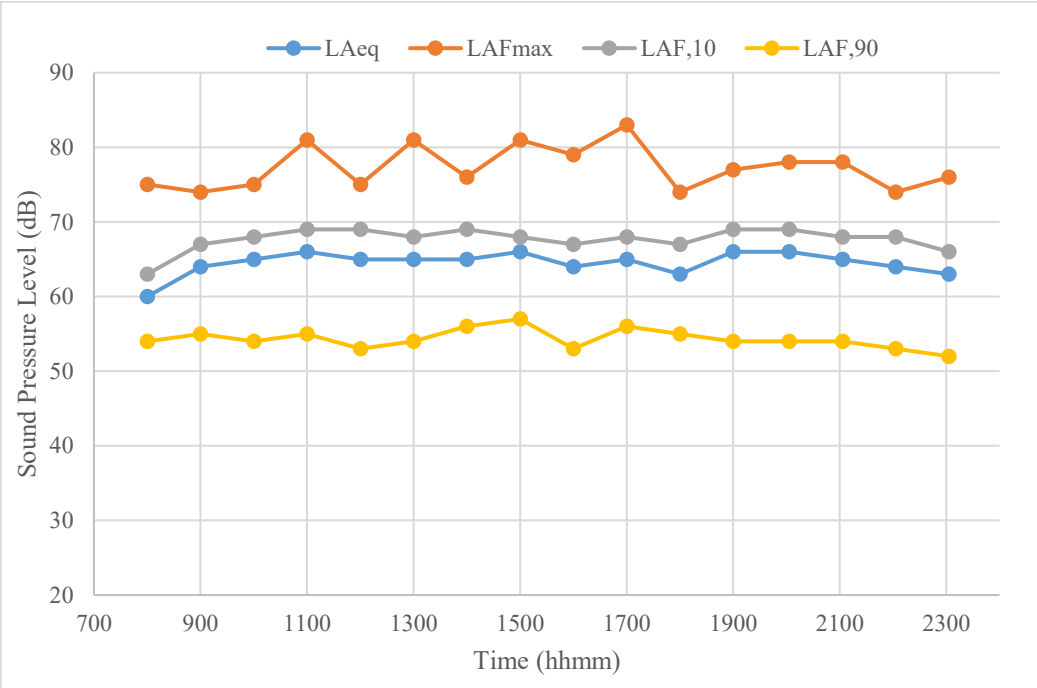

Figure 1: A graphical comparison of the noise indices at the site for the daytime 16-hours on.

Table 2a: Daytime 16-hour Noise Level (dB $L_{Aeq,16hr}$) *at the site*

#	Starting Time	Finishing Time	$L_{Aeq,1hr}$ (dB)	$L_{Amax,\ 1hr}$(dB)	$L_{A10,1hr}$ (dB)	$L_{A90,1hr}$ (dB)
1	07:00	08:00	60	75	63	54
2	08:00	09:00	64	74	67	55
3	09:00	10:00	65	75	68	54
4	10:00	11:00	66	81	69	55
5	11:00	12:00	65	75	69	53
6	12:00	13:00	65	81	68	54
7	13:00	14:00	65	76	69	56
8	14:00	15:00	66	81	68	57
9	15:00	16:00	64	79	67	53
10	16:00	17:00	65	83	68	56
11	17:00	18:00	63	74	67	55
12	18:00	19:00	66	77	69	54
13	19:05	20:05	66	78	69	54
14	20:05	21:05	65	78	68	54
15	21:05	22:05	64	74	68	53
16	22:05	23:05	63	76	66	52
Average Levels			**64**	**78**	**68**	**54**

Octave band noise spectra *dB* L_{eq} that were measured at the site are given in Table 2b.

Table 2b: Day time 16 hours octave band spectra, dB $\boldsymbol{L_{eq}}$.

#	125 Hz	250 Hz	500 Hz	1000 Hz	2000 Hz
1-16	57	55	55	57	52

Octave band maximum noise spectra *dB* L_{Max} that were measured at the site are given in Table 2c.

Table 2c: Day time 16 hours octave band maximum noise spectra, dB $\boldsymbol{L_{Max}}$.

#	125 Hz	250 Hz	500 Hz	1000 Hz	2000 Hz
1-16	73	71	72	71	67

Night-time noise level: The results from the measurements taken at the site, 8-hour noise level (dB L_{Aeq}) are summarised in the Table 3. The measured spectral data for the night-time is used to give a broadband noise level that is equal to dB L_{Aeq}. But night-time noise levels are not higher than day-time noise levels. Therefore, for worst-case scenario, daytime noise levels are used to predict internal noise levels in bedrooms.

Table 3a: Night-time Noise Level (dB L_{Aeq}) *at the site.*

#	Starting Time	Finishing Time	$L_{Aeq,1hr}$(dB)	$L_{Amax,1hr}$(dB)	$L_{A10,1hr}$(dB)	$L_{A90,1hr}$(dB)
1	23:05	00: 05	63	78	66	54
2	00: 05	01: 05	64	74	67	57
3	01: 05	02: 05	61	76	63	53
4	02: 05	03: 05	61	71	64	54
5	03: 05	04: 05	60	79	63	51
6	04: 05	05: 05	59	69	63	50
7	05: 05	06: 05	57	62	60	49
8	06: 05	07: 05	61	71	65	55
Average Levels			**61**	**75**	**64**	**54**

Octave band noise spectra *dB* L_{eq} that were measured at the site are given in Table 3b.

Table 3b: Night-time 8 hours octave band spectra, dB $\boldsymbol{L_{eq}}$.

#	125 Hz	250 Hz	500 Hz	1000 Hz	2000 Hz
1-8	56	53	54	54	50

Octave band maximum noise spectra *dB* L_{Max} measured at the site are given in Table 3c.

Table 3c: Night-time 8 hours octave band maximum noise spectra, dB $\boldsymbol{L_{Max}}$.

#	125 Hz	250 Hz	500 Hz	1000 Hz	2000 Hz
1-8	72	68	69	66	65

3.5. Observation

Noise level measurements were carried out at the site as shown in Tables 2-3. Observations and detailed notes were made of the significant noise sources, which contribute to each of the measured levels.

Road Traffic Noise: Road traffic noise from London Street and East Street was audible at the monitoring location and it was subjectively loud during the measurement. It was dominant noise source.

Site Sound Sources: The site was closed for business and there were not any sound sources at the site during measurements.

People Noise: Noise from pedestrian, shoppers, and customers from commercial businesses

nearby the site was audible at measurement location and was subjectively loud during the measurement.

Neighbourhood Sound Source: Noise from nearby shops was audible at measurement location but it was not subjectively loud during measurement.

Airplane noise: Noise from airplanes was not audible at measurement location.

Car-park Noise: Noise from cars parking on the roadside of London Road and at the car park at the rear of the site was audible at measurement location and it was not subjectively loud during measurement.

3.6. Uncertainty

The conclusion of this environmental noise survey is based on the noise monitoring undertaken at the site. The levels of uncertainty in the data and calculations are low given the robust measurements undertaken in noise monitoring and the confidence in the data statistical analysis.

4. BS8233:2014 Noise Assessment

4.1. Criteria

For desirable internal and external noise levels to be maintained, the assessment criteria are given in BS8233:2014 as:

- 35dB $L_{Aeq,16hr}$ within living rooms (07:00 – 23:00).
- 30dB $L_{Aeq,8hr}$ within bedrooms (23:00 – 07:00).
- 45dB L_{Amax} should not be regularly exceeded within bedrooms (23:00 – 07:00).
- <55dB $L_{Aeq,16hr}$ within external amenity spaces.

4.2. External Noise Analysis

Measured noise levels are shown in Tables 2-3, and they are characterised by environmental noise climate, which is dominated by road traffic noise, noise from shops including food and entertainment areas, by noise from public and shoppers using London Street.

4.3. Internal Noise Levels

Internal noise levels were calculated in order to demonstrate that the proposed conversion of *existing third floor of the site to two 3-bedrooms flats* can achieve suitable internal noise levels inside rooms, when the suggested appropriate glazing, ventilation systems, walls and ceiling/roof systems are used. In order to describe the likely internal exposure to environmental noise at the site, it is suggested using data from BS8233:2014 on standard construction materials. This will include all elements of the exposed living room and bedroom façades closest to the noise sources. A summary of assumed standard construction details is provided within Appendix C, and Appendix D.

4.4. Daytime Internal Noise Levels

The desirable limit of BS8233:2014 suggests a guideline of 35dB $L_{Aeq,16hr}$ for resting conditions, and up to 40dB considered acceptable for necessary developments. Considering the insulation with 12.8SC/16/16.8SC Double Glazing unit, *hit and miss trickle ventilation*, wall, and roof/ceiling, daytime environmental noise internally would be reduced from 63dB $L_{Aeq,16hr}$ to interior levels of 26dB $L_{Aeq,16hr}$ (Third Floor Flat-1, 100.22m^2), and 26dB $L_{Aeq,16hr}$ (Third Floor Flat-2, 106.25m^2). *The assumed standard of construction would place the internal levels in dining/living/kitchen areas as below 35dB. Therefore, daytime internal levels in dining/living areas are within the desirable category.*

4.5. Night-time Internal Noise Levels

BS8233:2014 suggests a desirable guideline of 30dB $L_{Aeq,8hr}$ for sleeping conditions, with an acceptable limit of 35dB $L_{Aeq,8hr}$. Individual noise events (Measured with fast time-weighted Maximum) should not normally exceed 45dB L_{AFmax} (as in BS8233:2014).

Considering the insulation with 12.8SC/16/16.8SC Double Glazing unit, *hit and miss trickle ventilation*, wall, and roof/ceiling, night-time environmental noise in bedrooms would be reduced from 63dB $L_{Aeq,8hr}$ to interior levels of 25dB $L_{Aeq,8hr}$ (Third Floor Flat-1, 100.22m^2), and 24dB $L_{Aeq,8hr}$ (Third Floor Flat-2, 106.25m^2).

Maximum individual noise events would be reduced from 78dB L_{AFmax} to internal levels of 40dB L_{AFmax} (Third Floor Flat-1, 100.22m^2), and 40dB L_{AFmax} (Third Floor Flat-2, 106.25m^2).

The assumed standard of construction would place the internal continuous levels in bedrooms as below 30dB $L_{Aeq,8hr}$ and maximum noise level as below 45dB L_{AFmax}. Therefore, night-time internal noise levels in bedrooms are in the desirable category.

4.6. External Amenity Noise Levels

BS8233:2014 provides a desirable guideline of 50dB $L_{Aeq,16hr}$ for external amenity spaces and an acceptable guideline of 55dB $L_{Aeq,16hr}$ for noisier environments. There is not any external amenity space at the site. *Therefore, external noise level in external amenity space is not determined.*

5. Vibration

In addition to the control of airborne noise transfer, it is essential to consider the transfer of noise as vibration to the proposed dwellings. It is also important to consider the transmission of vibration from the roads to the building façade.
During the site visit, a subjective analysis of the ground-borne vibration was conducted. Hard ground/surfaces and the existing walls around the building were inspected. Based on subjective assessment, no vibration from the noise sources and vibration sources (London Street and nearby mechanical units of shops) was detected at the site. There were not any structural borne noise and vibration from the noise sources at the site.

6. Sound Insulation Scheme

The recommended minimum requirements in terms of glazing and ventilation are given in Table 4. This is to ensure desirable internal noise levels are achieved. Detailed specifications could be found in Appendix C, and Appendix D.

Table 4: Façade Specifications

Internal Space	**Glazing**		**Ventilation**	
	Minimum Performance R_w+C_{tr}	Suggested Specification	Minimum Performance, $D_{nT,w}+C_{tr}$ (open)	Suggested Specification
Living Rooms	51	12.8SC/16/16.8SC Double Glazing	**32**	Hit & Miss Trickle, Ventilators
Bedrooms	51	12.8SC/16/16.8SC Double Glazing	**32**	Hit & Miss Trickle, Ventilators

6.1. Sound Insulation Assessment for floors and party walls

Sound insulation performance of the proposed flats is given in Appendix C, and Appendix D.

<u>The internal floors between second floor and third floor flats</u>: Approved Document E condition states that "The scheme shall achieve a minimum airborne sound insulation value of 43 dB (D_{nTw} + C_{tr} dB) for all floors, stairs, and walls, and an impact sound insulation value of 64 dB ($L_{nT,w}$ dB) for all floors and stairs. For a ground floor where there is neither an appreciable noise source nor a noise-sensitive occupant below the floor, the floor is only of interest if it could contribute to flanking transmission. **A higher standard of sound insulation may be required between spaces used for normal domestic purposes and communal or non-domestic purposes**".

To control the transfer of noise from the second floor of the site to third floor flats, existing ceiling and a platform floor given in Figure 2 is suggested. In addition to existing floor, a new platform floor with absorbent material should be used (See Approved Document E, page 61 section 4.31/4.32/4.33/4.34 for details). A minimum of two 15mm layers of board material fixed together with joints staggered, minimum total mas per unit are 25kg/m^2. The floating layer should be laid loose on a resilient layer. The resilient layer should be mineral wool, minimum thickness 50mm, density 80 to 120kg/m^2. Proposed new ceiling scheme in Figure 2 will reduce noise level significantly and satisfy the required minimum sound insulation value of 43dB that is set by Approved Document E.

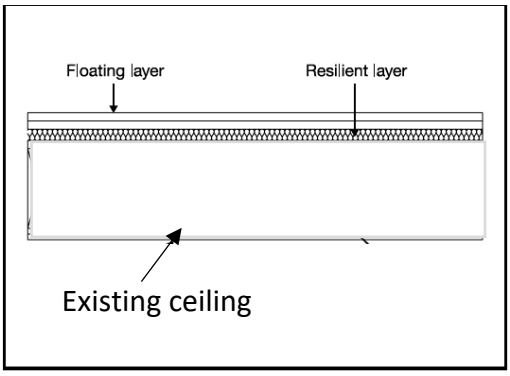

Figure 2: Suggested new ceiling scheme for additional sound insulation for the floor between second floor of the site and third floor flats, and a platform floor with absorbent material. ***(Approved Document E, page 61 section 4.31/4.32/4.33/4.34 for details).***

<u>The party walls</u>: Approved Document E condition states that "The scheme shall achieve a minimum airborne sound insulation value of 43dB (D_{nTw} + C_{tr} dB) for all floors, stairs, and walls, and an impact sound insulation value of 64dB ($L_{nT,w}$ dB) for all floors and stairs".

To control the transfer of noise between party walls, a sound insulation scheme given in Figure 3 is suggested to achieve a minimum airborne sound insulation value of 43dB (D_{nTw} + C_{tr} dB).

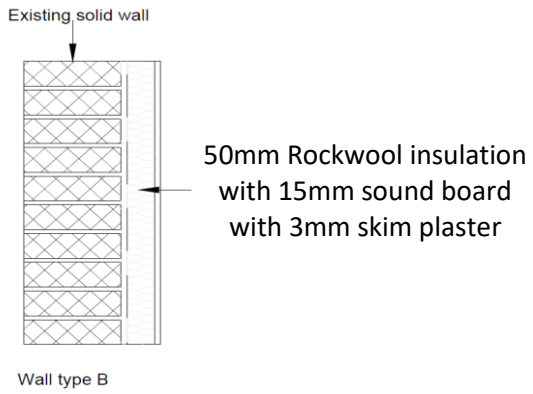

Figure 3: Upgrade of insulation to Party Wall.

<u>The external walls of the flats</u>: Approved Document E condition states that "The scheme shall achieve a minimum airborne sound insulation value of 43dB (D_{nTw} + C_{tr} dB) for all floors, stairs, and walls, and an impact sound insulation value of 64dB ($L_{nT,w}$ dB) for all floors and stairs".

To control the transfer of noise through party walls *from outside to proposed flats*, a sound insulation scheme given in Figure 4 is suggested to achieve an airborne sound insulation value higher than 43dB (D_{nTw} + C_{tr} dB). Proposed party wall scheme in Figure 4 will reduce noise level significantly and satisfy the required minimum sound insulation value of 43dB that is set by Approved Document E.

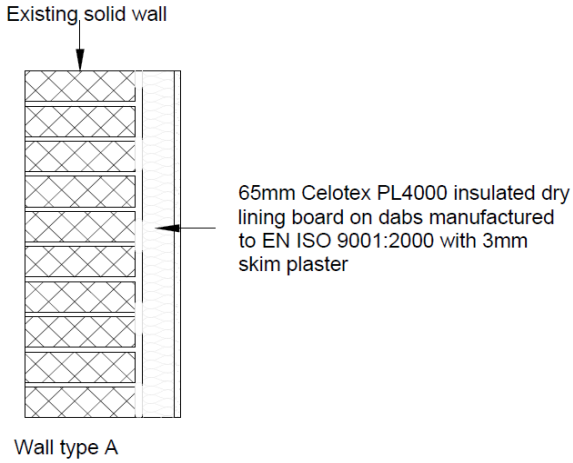

Figure 4: Upgrade of insulation to external walls of the flats.

Following approval and implementation of the scheme, a test shall be undertaken to demonstrate that the attenuation measures carried out as part of the approved scheme are effective and achieve the specified criteria. All works, which form part of the approved scheme, shall be completed before the use commences

7. Overheating

Trickle vents in windows will be used to prevent overheating, and condensation build up in kitchen/living area by allowing constant circulation of air. Passive ventilation leverages natural wind and thermal buoyancy to circulate air to and from an indoor space. Passive ventilation will be used to regulate indoor air temperature as well as bringing fresh air into the room and removing stale air from the room (see Table 4, Appendix C, and Appendix D for more details). Solar reflective window films may be integrated into the glazing strategy to prevent overheating from UV rays. These window films are capable of rejecting up to 90 % of UV rays, providing a robust thermal barrier against solar gain without compromising the transmission of natural visible light.

8. Conclusion

An environmental noise survey was undertaken at the site in order to determine internal noise levels of proposed flats. A BS8233 noise assessment was carried out at the site. All worst-case situations were considered for this assessment.

A rigorous calculation method that is given in BS8233 and based on measured environmental noise levels was used to determine interior noise levels in the proposed flats.

In accordance with BS8233:2014 guidance:

- The daytime internal noise levels in living room are within the desirable category of 35dB(A) $L_{Aeq,16hr}$.

- The night-time internal noise levels in bedrooms are in the desirable category of 30dBA $L_{Aeq,8hr}$.
- The maximum individual noise events in bedrooms do not exceed 45dB(A) L_{AFmax} of the desirable category.

The results given in Table 1 demonstrate that the predicted indoor ambient noise levels, $L_{Aeq,16hr}$ for day, $L_{Aeq,8hr}$ for night and L_{AFmax} for night in the proposed flats do not exceed the guideline values that are set in Table 4 of BS8233:2014.

We can confirm that the predicted internal ambient noise levels are within the standards set out in BS8233:2014 guidance.

Also, we can confirm that there were not any structural borne noise and vibration from the noise sources nearby the site.

9. References

- BS 8233:2014 “Guidance on sound insulation and noise reduction for buildings”.
- Approved Document E, the building regulation 2010. HM Government.

10. Appendixes

10.1. Appendix A: Equipment details

Description of the Equipment used for measurements

Equipment	Description	Quantity	Serial No
Norsonic SLM	Type 1 sound level meter, NOR140	1	1402815
Norsonic	½ inch microphone	1	1225
Norsonic	Preamplifier	1	1209
Norsonic Calibrator	Class 1 Calibrator (114 dB)	1	Nor-1251-32544

10.2. Appendix B: Calibration Details and measurement set-up

Noise monitoring location at the site on London Street

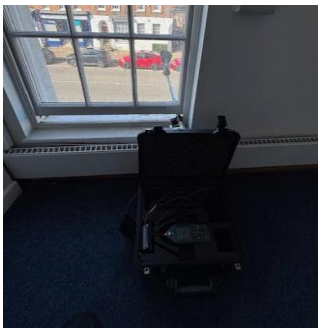

Calibration Details				
Calibrator Ref Level (dB)	**Level Before (dB)**	**Deviation Before (dB)**	**Level After (dB)**	**Deviation After (dB)**
114	114.00	0.00	113.9	-0.10

10.3 Appendix C: Third Floor Flat 1

BS8233:2014 Specification Calculations / Construction Details,
Day - Lounge/ Dinning/Kitchen (22.45m^2), Third Floor Flat 1 (100.22m^2)

Room Properties		Sound Insulation Properties					
Room Width (m)	3.1	**Frequency, Hz**	**125**	**250**	**500**	**1k**	**2k**
Room Depth (m)	7.24	Wall, $R_{w,Ctr}$ (dB)	40	44	45	51	56
Room Height (m)	2.8	Ceiling, $R_{w,Ctr}$ (dB)	28	34	40	45	49
Glazed Area (m^2)	2	Glazing, $R_{w,Ctr}$ (dB)	27	32	43	46	48
Is dwelling on top floor?	Yes	Vents, $D_{new,Ctr}$ (dB)	37	36	35	36	34

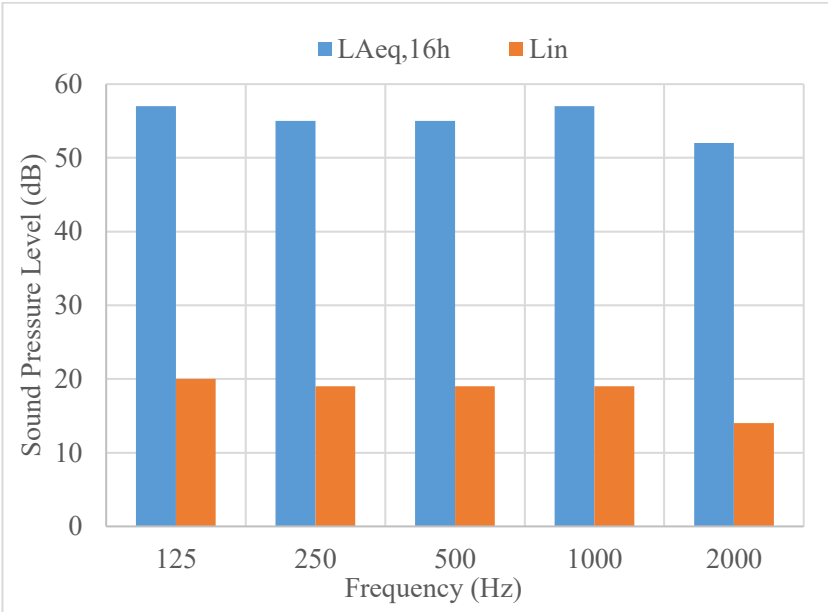

External Level **63 dB** L_{Aeq}

Internal Level **26dB** L_{Aeq}

Insertion Loss **37dB** L_{Aeq}

Sound Insulation Requirement			
Minimum Sound Insulation Requirement			**Suitable Systems**
Glazing	**51**	dB $R_{w+}C_{tr}$	12.8SC/16/16.8SC Double Glazing
Ventilation	**32**	dB $D_{new+}C_{tr}$	Hit & miss trickle vent Titan Trimvent XS13 4400EA

	Transmission coefficients				
Frequency, Hz	**125**	**250**	**500**	**1k**	**2k**
Vents	6.89162E-06	8.67604E-06	1.09225E-05	8.67604E-06	1.37506E-05
Glazing	6.89162E-05	2.17932E-05	1.7311E-06	8.67604E-07	5.47421E-07
Wall	9.6546E-05	3.84357E-05	3.05305E-05	7.66892E-06	2.42513E-06
Ceiling	0.001584893	0.000398107	0.0001	3.16228E-05	1.25893E-05
External, L_{eq} (dB)A	57	55	55	57	52
Internal L_{Aeq} (dB)A	20	19	19	19	14

Calculations are conducted in accordance with BS8233: 2014 rigorous calculation method:

$$L_{eq,2}=L_{eq,ff}+10\log\left(\frac{A_0}{S}10^{\frac{-D}{10}}+\frac{S_{wi}}{S}10^{\frac{-R_{wi}}{10}}+\frac{S_{ew}}{S}10^{\frac{-R_{ew}}{10}}+\frac{S_{rr}}{S}10^{\frac{-R_{rr}}{10}}\right)+10\log\left(\frac{S}{A}\right)+3$$

BS8233: 2014 Specification Calculation Summary
Night – Master-bedroom (15.50m^2), Third Floor Flat 1 (100.22m^2)

Room Properties		Sound Insulation Properties					
Room Width (m)	3.6	**Frequency, Hz**	**125**	**250**	**500**	**1k**	**2k**
Room Depth (m)	4.3	Wall, $R_{w,Ctr}$ (dB)	40	44	45	51	56
Room Height (m)	2.6	Ceiling, $R_{w,Ctr}$ (dB)	28	34	40	45	49
Glazed Area (m^2)	2	Glazing, $R_{w,Ctr}$ (dB)	27	32	43	46	48
Is dwelling on top floor?	Yes	Vents, $D_{new,Ctr}$ (dB)	37	36	35	36	34

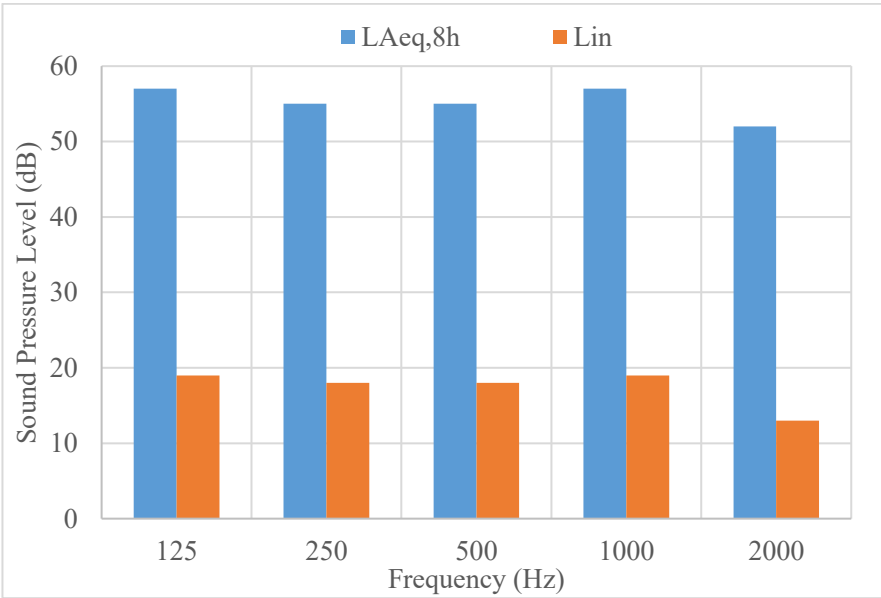

External Level **63dB** L_{Aeq}

Internal Level **25dB** L_{Aeq}

Insertion Loss **38dB** L_{Aeq}

Sound Insulation Requirement			
Minimum Sound Insulation Requirement			**Suitable Systems**
Glazing	**51**	dB $R_{w+}C_{tr}$	12.8SC/16/16.8SC Double Glazing
Ventilation	**32**	dB $D_{new+}C_{tr}$	Hit & miss trickle vent Titan Trimvent XS13 4400EA

	Transmission coefficients				
Frequency, Hz	**125**	**250**	**500**	**1k**	2k
Vents	9.02017E-06	1.13557E-05	1.4296E-05	1.13557E-05	1.79976E-05
Glazing	0.000180403	5.70486E-05	4.53153E-06	2.27115E-06	1.433E-06
Wall	9.09584E-05	3.62112E-05	2.87636E-05	7.22508E-06	2.28477E-06
Ceiling	0.001584893	0.000398107	0.0001	3.16228E-05	1.25893E-05
External Level (dB)A	57	55	55	57	52
Internal Level (dB)A	19	18	18	19	13

Calculations are conducted in accordance with BS8233: 2014 rigorous calculation method:

$$L_{eq,2}=L_{eq,ff}+10\log\left(\frac{A_0}{S}10^{\frac{-D}{10}}+\frac{S_{wi}}{S}10^{\frac{-R_{wi}}{10}}+\frac{S_{ew}}{S}10^{\frac{-R_{ew}}{10}}+\frac{S_{rr}}{S}10^{\frac{-R_{rr}}{10}}\right)+10\log\left(\frac{S}{A}\right)+3$$

BS8233: 2014 Specification Calculation Summary
Maximum Levels, Master Bedroom (15.50m^2), Third Floor Flat 1 (100.22m^2)

Room Properties		Sound Insulation Properties					
Room Width (m)	3.6	**Frequency, Hz**	**125**	**250**	**500**	**1k**	**2k**
Room Depth (m)	4.3	Wall, $R_{w,Ctr}$ (dB)	40	44	45	51	56
Room Height (m)	2.6	Ceiling, $R_{w,Ctr}$ (dB)	28	34	40	45	49
Glazed Area (m^2)	2	Glazing, $R_{w,Ctr}$ (dB)	27	32	43	46	48
Is dwelling on top floor?	Yes	Vents, $D_{new,Ctr}$ (dB)	37	36	35	36	34

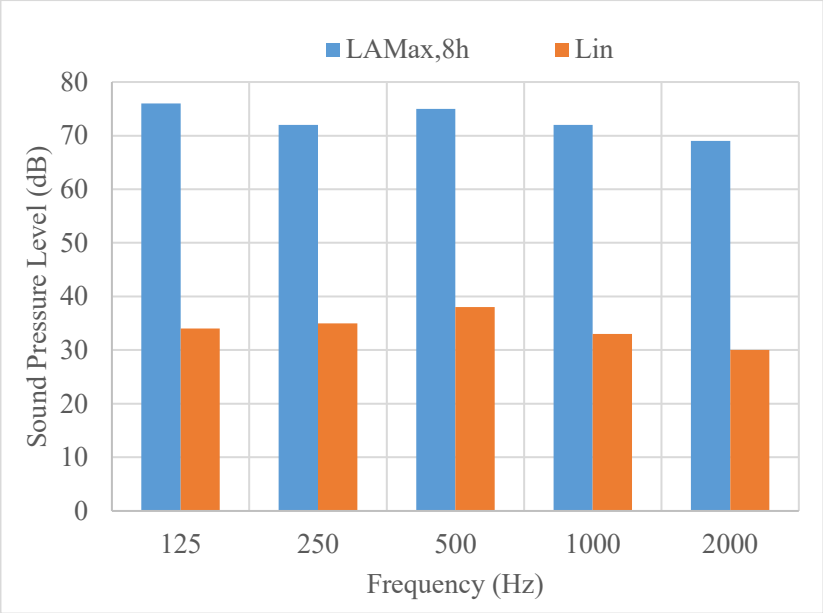

External Level **78dB** L_{AMax}

Internal Level **40B** L_{AMax}

Insertion Loss **38dB** L_{AMax}

Sound Insulation Requirement			
Minimum Sound Insulation Requirement			Suitable Systems
Glazing	**51**	dB $R_{w+}C_{tr}$	12.8SC/16/16.8SC Double Glazing
Ventilation	**32**	dB $D_{new+}C_{tr}$	Hit & miss trickle vent Titan Trimvent XS13 4400EA

	Transmission coefficients				
Frequency, Hz	**125**	**250**	**500**	**1k**	**2k**
Vents	9.02017E-06	1.13557E-05	1.4296E-05	1.13557E-05	1.79976E-05
Glazing	0.000180403	5.70486E-05	4.53153E-06	2.27115E-06	1.433E-06
Wall	9.09584E-05	3.62112E-05	2.87636E-05	7.22508E-06	2.28477E-06
Ceiling	0.001584893	0.000398107	0.0001	3.16228E-05	1.25893E-05
External Level (dB)A	73	71	72	71	67
Internal Level (dB)A	31	34	35	33	28

Calculations are conducted in accordance with BS8233: 2014 rigorous calculation method:

$$L_{eq,2}=L_{eq,ff}+10\log\left(\frac{A_0}{S}10^{\frac{-D}{10}}+\frac{S_{wi}}{S}10^{\frac{-R_{wi}}{10}}+\frac{S_{ew}}{S}10^{\frac{-R_{ew}}{10}}+\frac{S_{rr}}{S}10^{\frac{-R_{rr}}{10}}\right)+10\log\left(\frac{S}{A}\right)+3$$

10.4 Appendix D: Third Floor Flat 2

BS8233:2014 Specification Calculations / Construction Details,
Day, Living/ Dining/ Kitchen Area (27.08^2), Third Floor Flat 2 (106.25m^2)

Room Properties		Sound Insulation Properties					
Room Width (m)	3.35	Frequency, Hz	125	250	500	1k	2k
Room Depth (m)	8.08	Wall, Rw,Ctr (dB)	40	44	45	51	56
Room Height (m)	2.6	Ceiling, Rw,Ctr (dB)	28	34	40	45	49
Glazed Area (m^2)	2	Glazing, Rw,Ctr (dB)	27	32	43	46	48
Is dwelling on top floor?	Yes	Vents, Dnew,Ctr (dB)	37	36	35	36	34

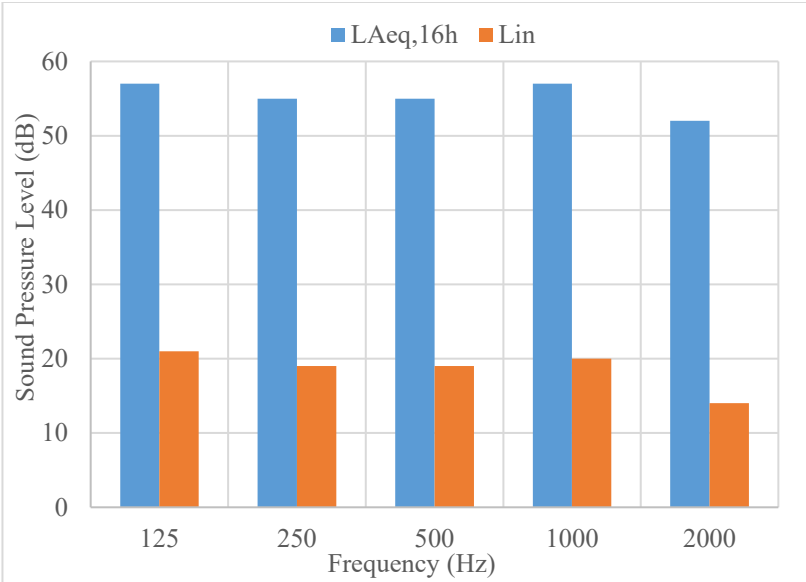

External Level **63dB** L_{Aeq}

Internal Level **26dB** L_{Aeq}

Insertion Loss **37dB** L_{Aeq}

Sound Insulation Requirement			
Minimum Sound Insulation Requirement			**Suitable Systems**
Glazing	**51**	dB $R_{w+}C_{tr}$	12.8SC/16/16.8SC Double Glazing
Ventilation	**32**	dB $D_{new+}C_{tr}$	Hit & miss trickle vent Titan Trimvent XS13 4400EA

	Transmission coefficients				
Frequency, Hz	**125**	**250**	**500**	**1k**	**2k**
Vents	6.71399E-06	8.452E-06	1.064E-05	8.452E-06	1.34E-05
Glazing	0.00013428	4.246E-05	3.373E-06	1.69E-06	1.067E-06
Wall	9.32701E-05	3.713E-05	2.949E-05	7.409E-06	2.343E-06
Ceiling	0.001584893	0.0003981	0.0001	3.162E-05	1.259E-05
External L_{eAeq} (dB)A	57	55	55	57	52
Internal L_{Aeq} (dB)A	21	19	19	20	14

Calculations are conducted in accordance with BS8233: 2014 rigorous calculation method:

$$L_{eq,2}=L_{eq,ff}+10\log\left(\frac{A_0}{S}10^{\frac{-D}{10}}+\frac{S_{wi}}{S}10^{\frac{-R_{wi}}{10}}+\frac{S_{ew}}{S}10^{\frac{-R_{ew}}{10}}+\frac{S_{rr}}{S}10^{\frac{-R_{rr}}{10}}\right)+10\log\left(\frac{S}{A}\right)+3$$

BS8233: 2014 Specification Calculation Summary
Night – Master-bedroom (16.68m^2), Third Floor Flat 2 (106.25m^2)

Room Properties		Sound Insulation Properties					
Room Width (m)	3	Frequency, Hz	125	250	500	1k	2k
Room Depth (m)	4.1	Wall, Rw,Ctr (dB)	40	44	45	51	56
Room Height (m)	2.6	Ceiling, Rw,Ctr (dB)	28	34	40	45	49
Glazed Area (m^2)	2	Glazing, Rw,Ctr (dB)	27	32	43	46	48
Is dwelling on top floor?	Yes	Vents, Dnew,Ctr (dB)	37	36	35	36	34

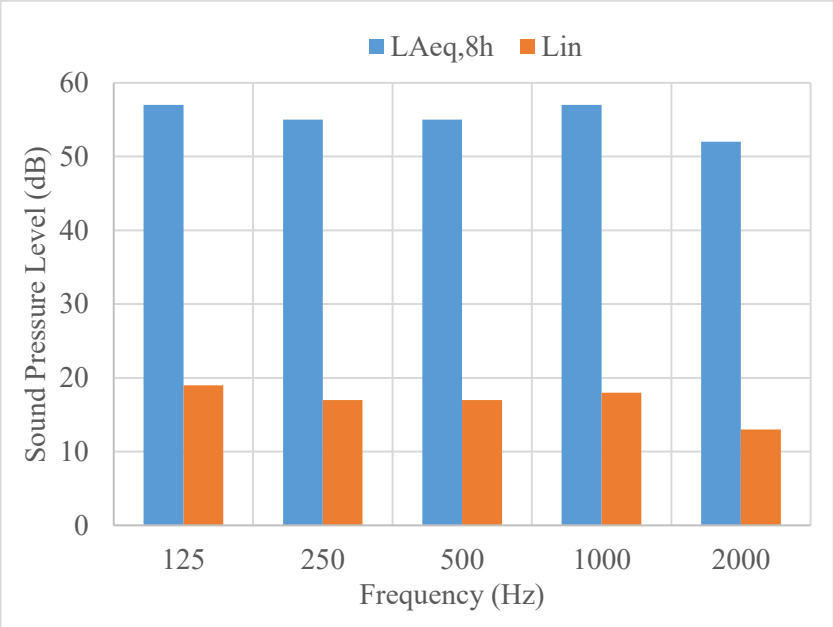

External Level **63dB** L_{Aeq}

Internal Level **24dB** L_{Aeq}

Insertion Loss **39dB** L_{Aeq}

Sound Insulation Requirement			
Minimum Sound Insulation Requirement			**Suitable Systems**
Glazing	**51**	dB $R_{w+}C_{tr}$	12.8SC/16/16.8SC Double Glazing
Ventilation	**32**	dB $D_{new+}C_{tr}$	Hit & miss trickle vent Titan Trimvent XS13 4400EA

	Transmission coefficients				
Frequency, Hz	**125**	**250**	**500**	**1k**	**2k**
Vents	1.08086E-05	1.36072E-05	1.71304E-05	1.36072E-05	2.15659E-05
Glazing	0.000216171	6.83594E-05	5.42998E-06	2.72144E-06	1.71711E-06
Wall	8.91658E-05	3.54975E-05	2.81967E-05	7.08269E-06	2.23974E-06
Roof	0.001584893	0.000398107	0.0001	3.16228E-05	1.25893E-05
External Level (dB)A	57	55	55	57	52
Internal Level (dB)A	19	17	17	18	13

Calculations are conducted in accordance with BS8233: 2014 rigorous calculation method:

$$L_{eq,2}=L_{eq,ff}+10\log\left(\frac{A_0}{S}10^{\frac{-D}{10}}+\frac{S_{wi}}{S}10^{\frac{-R_{wi}}{10}}+\frac{S_{ew}}{S}10^{\frac{-R_{ew}}{10}}+\frac{S_{rr}}{S}10^{\frac{-R_{rr}}{10}}\right)+10\log\left(\frac{S}{A}\right)+3$$

BS8233: 2014 Specification Calculation Summary
Maximum Levels, Master-bedroom (16.68m^2), Third Floor Flat 2 (106.25m^2)

Room Properties		Sound Insulation Properties					
Room Width (m)	3	Frequency, Hz	125	250	500	1k	2k
Room Depth (m)	4.1	Wall, Rw,Ctr (dB)	40	44	45	51	56
Room Height (m)	2.6	Ceiling, Rw,Ctr (dB)	28	34	40	45	49
Glazed Area (m^2)	2	Glazing, Rw,Ctr (dB)	27	32	43	46	48
Is dwelling on top floor?	Yes	Vents, Dnew,Ctr (dB)	37	36	35	36	34

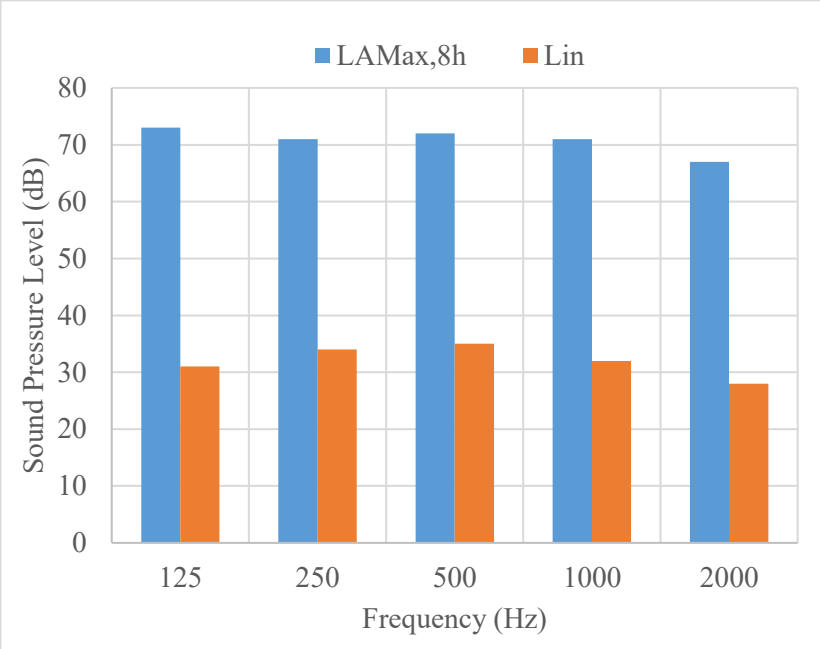

External Level **78dB** L_{AMax}

Internal Level **40dB** L_{AMax}

Insertion Loss **38dB** L_{AMax}

Sound Insulation Requirement			
Minimum Sound Insulation Requirement			**Suitable Systems**
Glazing	**51**	dB $R_{w+}C_{tr}$	12.8SC/16/16.8SC Double Glazing
Ventilation	**32**	dB $D_{new+}C_{tr}$	Hit & miss trickle vent Titan Trimvent XS13 4400EA

	Transmission coefficients				
Frequency, Hz	**125**	**250**	**500**	**1k**	**2k**
Vents	1.00365E-05	1.26352E-05	1.59068E-05	1.26352E-05	2.00255E-05
Glazing	0.000200731	6.34766E-05	5.04213E-06	2.52705E-06	1.59446E-06
Wall	8.99396E-05	3.58056E-05	2.84414E-05	7.14416E-06	2.25918E-06
Ceiling	0.001584893	0.000398107	0.0001	3.16228E-05	1.25893E-05
External Level (dB)A	73	71	72	71	67
Internal Level (dB)A	35	34	35	32	28

Calculations are conducted in accordance with BS8233: 2014 rigorous calculation method:

$$L_{eq,2}=L_{eq,ff}+10\log\left(\frac{A_0}{S}10^{\frac{-D}{10}}+\frac{S_{wi}}{S}10^{\frac{-R_{wi}}{10}}+\frac{S_{ew}}{S}10^{\frac{-R_{ew}}{10}}+\frac{S_{rr}}{S}10^{\frac{-R_{rr}}{10}}\right)+10\log\left(\frac{S}{A}\right)+3$$

10.5 Appendix E: Building Regulations Approved Document E

Table 1: Building regulation Table 1a, E1.		
Dwelling-houses and flats – performance standards for separating walls, separating floors, and stairs that have a separating function		
	Airborne Sound Insulation $D_{nT,w}+C_{tr}$dB (min. value)	Impact Sound Insulation $L_{nT,w}$ dB (max. value)
Purpose build dwelling-houses and flats		
Walls	45	-
Floors and stairs	45	62
Dwelling – houses and flats formed by material change of use		
Walls	**43**	**-**
Floors and stairs	**43**	**64**

Building Regulations Table 1b, E1

Table 2: Building Regulation Table 1b, E1		
Rooms for residential purposes – performance standards for separating walls, floors, and stairs that have a separating function.		
	Airborne Sound Insulation $D_{nT,w}+C_{tr}$ dB (min. value)	Impact Sound Insulation $L_{nT,w}$ dB (max. value)
Purpose build dwelling-houses and flats		
Walls	43	-
Floor and stairs	45	62
Dwellings – houses and flats formed by material change of use		
Walls	43	-
Floors and stairs	43	64

10.6Appendix F: Acoustics terminology

Parameter	**Description**
Decibel (dB)	A logarithmic scale representing the sound pressure or power level relative to the threshold of hearing ($20x10^{-6}$ Pascals).
Ambient noise level	The totally encompassing sound in a given $L_{Aeq,T}$ situation at a given time, usually composed of sound from many sources near and far.
Background noise level	The A-weighted sound pressure level of the $L_{A90,T}$ residual noise at the assessment position exceeded for 90% of a given time interval T, measured using the fast response and reported to the nearest whole dB.
Rating level $L_{Ar,T}$	The specific noise level plus any adjustment for the characteristic features of the noise.
Residual noise level	The ambient noise level at the assessment $L_{Aeq,T}$ position in the absence of the noise source under investigation.

Specific noise level	The equivalent continuous A-weighted noise $L_{Aeq,T}$ level produced by the source over a given reference time interval.
$L_{Aeq,T}$	The A-weighted equivalent continuous noise level over the time period T (typically T= 16 hours for daytime periods, T = 8 hours for night-time periods). This is the sound level that is equivalent to the average energy of noise recorded over a given period.
$L_{n,T}$	The noise level exceeded for n% of the time over a given period T. e.g., L90, the noise level exceeded for 90% of the time (background noise) level.
L_{Max}	The maximum noise level measured.
$L_{eq,ff}$	The equivalent continuous sound pressure level outside the room elements under consideration
A_0	A reference absorption area of 10 m^2 and is independent of frequency;
S_f	The total facade area in square metres (m^2) of the room in question;
S_{wi}	The area in square metres (m^2) of the windows of the room;
S_{ew}	The area in square metres (m^2) of the external wall of the room;
S_{rr}	The area in square metres (m^2) of the ceiling of the room
S	The total area in square metres (m^2) of elements through which sound enters the room, i.e. $S_f + S_{rr}$;
$D_{n,e}$	The insulation of the trickle ventilator measured according to BS EN ISO 10140;
R_{wi}	The sound reduction index (octave band value) of the window (see Annex C BS EN ISO 10140)
R_{ew}	The sound reduction index (octave band value) of the external wall (see Annex C BS EN ISO 10140);
R_{rr}	The sound reduction index (octave band values) of the roof/ceiling (see Annex C BS EN ISO 10140);
A	The equivalent absorption area of the receiving room being considered (see Annex C BS EN ISO 10140);
3	A correction factor

10.7 Appendix G: Plans for proposed flats

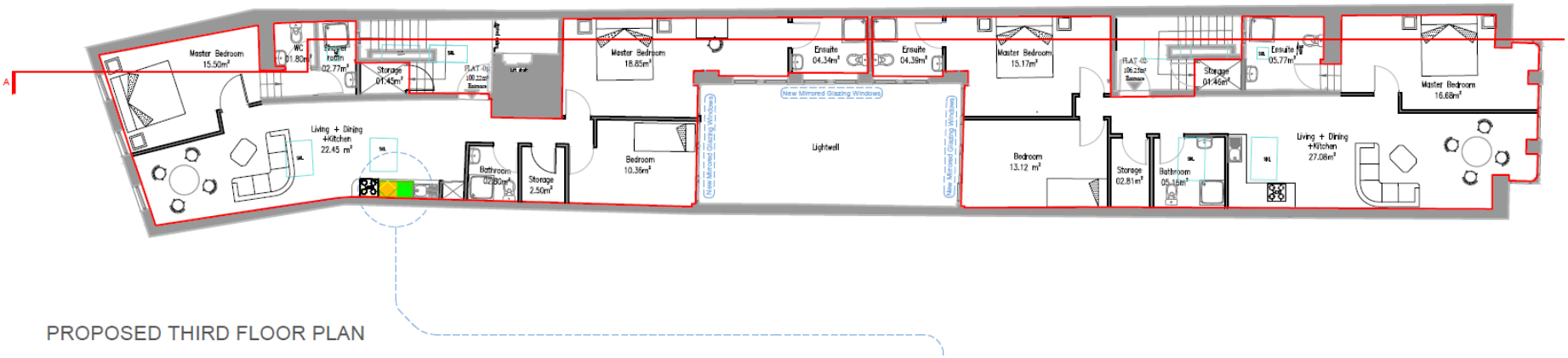

PROPOSED THIRD FLOOR PLAN