Wall Charger 2 Socketed

- **Auto Solar Charging** allowing you to utilise excess solar power to charge your EV, maximising the benefits of clean, renewable energy while reducing your energy bills.
- **Tariff Sense** – Our energy management feature connects to any UK tariff, giving real-time insights and control over charging costs.
- Models with Wi-Fi/LAN, Wi-Fi/LAN/4G, Wi-Fi/LAN/4G+RFID
- Fully compliant with The Electric Vehicles (Smart Charge Points) Regulations 2021, including Schedule 1
- Full Smart functionality via Sync Energy App and OCPP 1.6J connectivity
- Dynamic charging – up to 7.4 (32A)
- No earth rod required – integrated open PEN conductor protection
- Safe – integrated 30mA Type A RCD with 6mA DC
- OCPP 1.6J connectivity – free lifetime over-the-air updates
- Type 2 socket with auto-lock
- Tethered version also available

PART NO.	DESCRIPTION	SOCKET TYPE	MAX OUTPUT (kw)	(A)	INPUT VOLTAGE
EVWC2S7G-02	Single Phase 7.4KW / WI-FI / LAN	Type 2 with Autolock	7.4kW MODE 3	32A	220-240V
EVWC2S7GG-02	Single Phase 7.4KW / WI-FI / LAN / 4G	Type 2 with Autolock	7.4kW MODE 3	32A	220-240V
EVWC2S7GGR-02	Single Phase 7.4KW / WI-FI / LAN / 4G + RFID	Type 2 with Autolock	7.4kW MODE 3	32A	220-240V

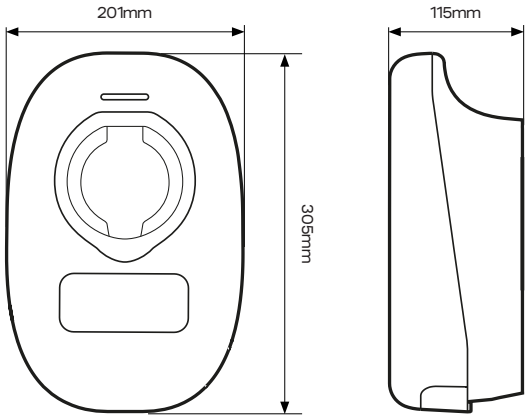

ELECTRICAL SPECIFICATIONS

MAXIMUM CHARGE CURRENT	Configurable, 6-32A	**LOAD BALANCING**	Supplied with Load Management Kit
INPUT FREQUENCY	50-60hz	**OVERLOAD AND FAULT PROTECTION**	Over current and over voltage protection
PEN FAULT	Built-in, Earth Disconnection	**METER ACCURACY**	2% Class C equivalent internal meter with option for connection to external RS485 MDBUS Meter
RCD PROTECTION	Built-in 30mA AC Type A Protection	**TERMINALS**	Combi screw first fix plug connector
ELECTRICAL CLASS	Class 1 with Class 2(II) Housing	**INDICATOR**	RGB LED and Buzzer
CONSUMER UNIT REQUIREMENTS	40A MCB or 30mA Type A RCD (Dependent on cable type &/or route)	**INDICATOR MODES**	BLUE – Standby, FLASHING BLUE – Preparing, FLASHING GREEN – Finishing, SCROLLING GREEN – Charging, YELLOW – No Network, RED – Error, PURPLE – Balancer Error
CABLE MANAGEMENT	Built-in cable wrap	**ANTI-TAMPER DETECTION**	2 Layer Protection, Bluetooth to Bluetooth commissioning

OPERATING CONDITIONS & CONSTRUCTION

OPERATING	-25 to +55°C	**HOUSING**	UV Stabilised Polycarbonate
IP RATING	IP65	**COLOUR**	Base and Body RAL 9005 (Black) Trim RAL 9006 (Anthracite Grey) Optional Coloured Trims available as accessories
IK RATING	IK10	**DIMENSIONS**	305 (H) x 201 (W) x 115 (D)
MOUNTING	Wall Mounted, 4-point with horizontal and vertical adjustment, 110mm x 145mm fixing centres		

CONNECTIVITY & ACCESSORIES

SOC MODULE	AI ESP32-S SOC	**SOFTWARE & FIRMWARE UPDATE**	Over-the-air
WI-FI & ETHERNET	2.4Ghz 802.11 B/G/N & RJ45	**STANDARDS & APPROVALS**	IEC61851-1, IEC61439-7, IEC 62955, IC 61851-21-2, BS EN62196, EN301 511, EN 301 908-1/2/13, EN 301 489-3, EN 300 330, EMC COMPLIANT, CE, UKCA, The Electrical Vehicles (Smart Charge Points) Regulations 2021 including schedule 1
WI-FI SECURITY	WPA/WPA2/WPA2-ENTERPRISE/WPS		
BLUETOOTH	4.2 BR/EDR and BLE	**SUPPLIED ACCESSORIES**	5 x Base Fixing Washers, 5 x Assembly Lid Bolts, 1 x Blanking Plug and 1 x 25mm Compression Gland, User-side Connector, Cord Grip and 2 x Cord Grip Assembly Screws, 1 x RFID Key Fob (EVWC2S7GGR ONLY)* *Additional Key Fobs can be ordered using the code EVXRFIDFOB-01
CONNECTION PROTOCOL	OCPP 1.6J		
4G DATA	Model specific 3 years included when used with Sync Energy (on the included package). Top-up online to continue service after 3 years.	**ACCESSORIES**	Single Charger Stand - (EVASTAND12S) Twin Charger Stand - (EVASTAND12T) Charging Cables - Various Coloured Trims - Shown below
APP	Powered by Sync Energy		

EVWC2TPAG Anthracite Grey | EVWC2TPSR Signal Red | EVWC2TPSY Sandstone Yellow | EVWC2TPRG Racing Green | EVWC2TPBG Blue Grey | EVWC2TPTW Traffic White | EVWC2TRJB Jet Black | EVWC2TPSG Signal Grey | EVWC2TPBG Deep Blue | EVWC2TMMS High Impact Metal

EVWC2Sxx.NH.11.2024