TYPICAL FENCE PANEL ELEVATION (1:20 Scale)

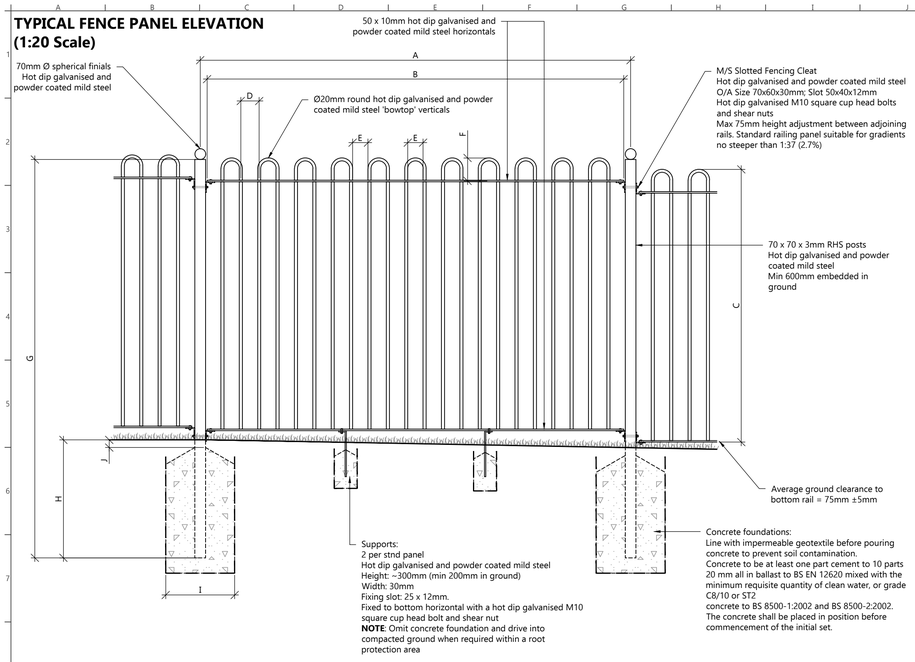

Scale: **1:20**

0mm 500mm 1000mm

Location	Dimensions - all to BS 1722-9
A	2780-2810mm - standard 1340-1370mm - half panel
B	2720mm - standard panel 1280mm - half panel
C	1780mm
D	120mm cntrs
E	100mm gap
F	150mm ±5mm
G	min 2600mm
H	min 600mm
I	450mm
J	50mm soil cover to foundations

TYPICAL ENVIRONMENT EGRESS PANEL ELEVATION (1:20 Scale)

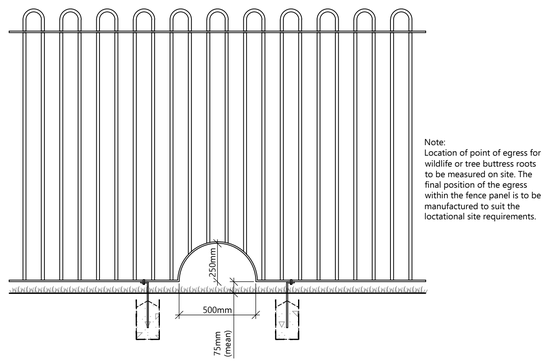

Note:
Location of point of egress for wildlife or tree buttress roots to be measured on site. The final position of the egress within the fence panel is to be manufactured to suit the loctational site requirements.

TYPICAL COMBINED GATE ELEVATION (1:20 Scale)

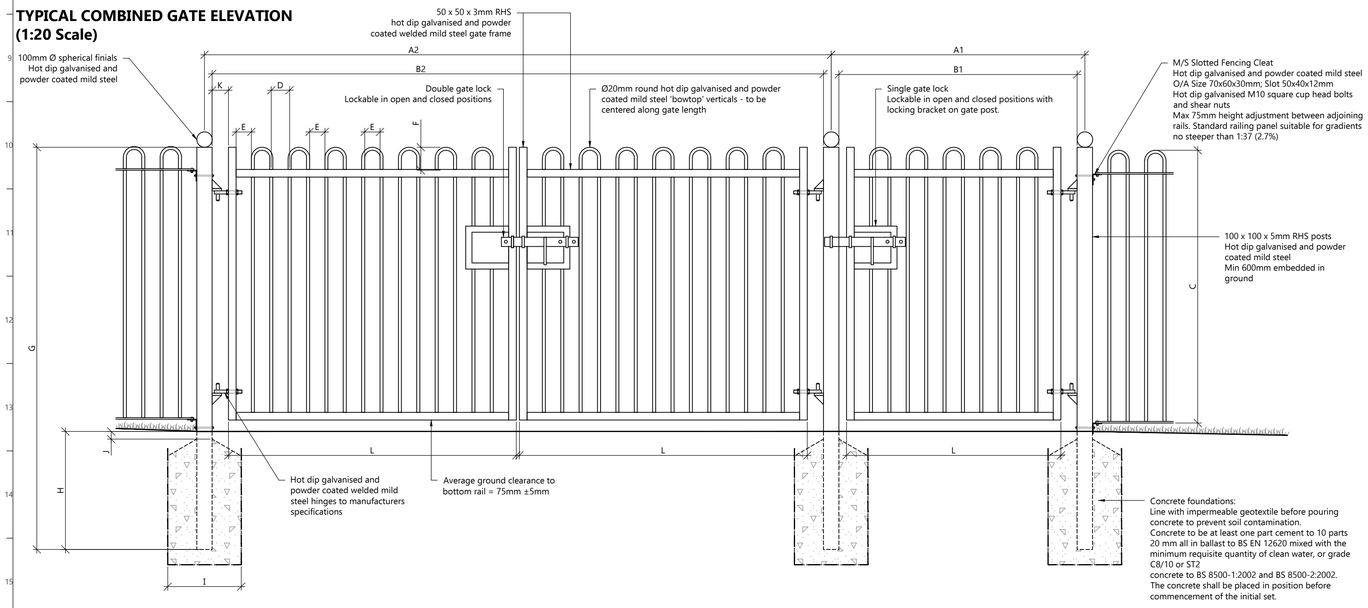

TYPICAL PEDESTRIAN GATE ELEVATION (1:20 Scale)

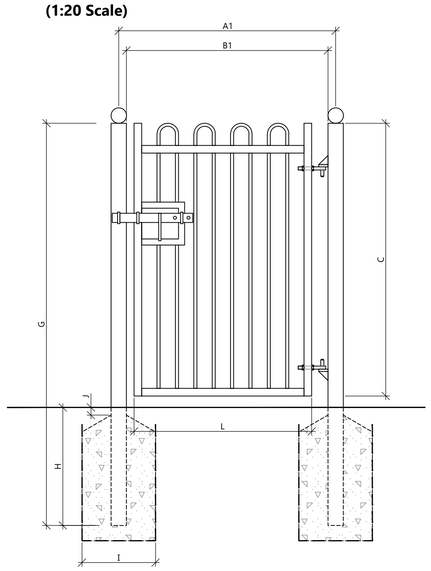

GATE DIMENSIONS*

Unit	Description	Default Dimensions (to BS 1722-9)	GATE LOCATION					
			RG1 Pepper Lane	RG2 Elmhurst Rd	RG3 Athletics car park	RG4 Dunsden Crescent	RG5 Hurley House side entrance	RG6 Hurley House
A1	Single Gate Post Centres (By bowtop verticals)	8 - 1416mm 10 - 1656mm 12 - 1896mm 14 - 2136mm	N/A (no pedestrian gate)	N/A (no pedestrian gate)	N/A (no pedestrian gate)	N/A (no pedestrian gate)	N/A	N/A (no pedestrian gate)
A2	Double Gate Post Centres (by bowtop verticals)	2x8 - 2652mm 2x10 - 3132mm 2x12 - 3612mm 2x14 - 4092mm	2500mm	4200mm	4200mm	N/A (existing brick plinths to be retained)	N/A (existing brick plinths to be retained)	3400mm
B1	Single Gate Opening	8 - 1316mm 10 - 1556mm 12 - 1796mm 14 - 2036mm	N/A (no pedestrian gate)	N/A (no pedestrian gate)	N/A (no pedestrian gate)	N/A (no pedestrian gate)	N/A	N/A (no pedestrian gate)
B2	Double Gate Opening	2x8 - 2552mm 2x10 - 3032mm 2x12 - 3512mm 2x14 - 3992mm	2300mm	4000mm	4000mm	3400mm	2600mm	3200mm
C	Fence height	1780mm	Default	Default	Default	Default	Default	Default
D	Bowtop Centers	120mm cntrs	Default	Default	Default	Default	Default	Default
E	Bowtop Gap	100mm gap	Default	Default	Default	Default	Default	Default
F	Bowtop Extension	150mm ±5mm	Default	Default	Default	Default	Default	Default
G	Post Height	min 2600mm	Default	Default	Default	Default	Default	Default
H	Post Buried depth	min 600mm	Default	Default	Default	Default	Default	Default
I	Foundation width	480mm	Default	Default	Default	Default	Default	Default
J	Foundation Soil Cover	50mm soil	Default	Default	Default	Default	Default	Default
K	Hinge Gap	106mm	Default	Default	Default	Default	Default	Default
L	Gate Panel/Leaf Width	8 - 1160mm 10 - 1400mm 12 - 1640mm 14 - 1880mm	1100mm	1900mm	1900mm	1600mm	1200mm	1500mm

*NOTE: All gate dimensions must be checked on site prior to manufacture.

TYPICAL 'STEP BACK' FENCE PLAN DETAIL (1:50 Scale)

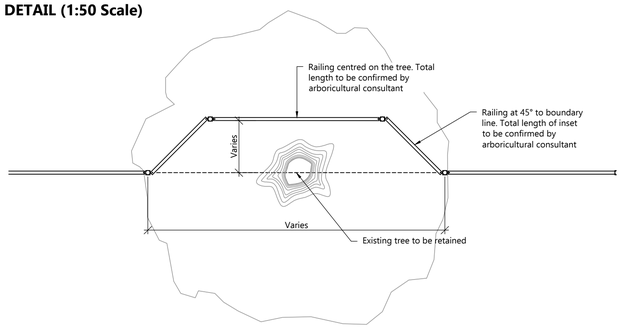

Scale: **1:50**

0m 2m 4m

Drawing Notes

1. Drawing prepared on behalf of the University of Reading to support planning permission for replacement boundary fencing at Whiteknights Campus.
2. Contractor to verify all site and ground conditions prior to installation and notify the Project Manager of any abnormal findings.
3. Contractor to verify all on site measurements prior to manufacture of replacement gates and fences.
4. Post lengths and founding depths are based on normal ground conditions; variations required due to site conditions shall be agreed with a structural engineer.
5. All works within tree root protection areas shall comply with the approved Arboricultural Method Statement. Refer to the TCP/AIA and AMS.
6. Materials and workmanship shall comply with BS 1722 9:2006 unless otherwise approved by the Project Manager.
7. All steelwork shall be hot dip galvanised and powder coated to RAL 9005 (Jet Black).
8. Flat, round and RHS steel sections shall comply with relevant dimensional and material standards to BS EN 10025 2, minimum grade S235JR.
9. Welded panels to be formed with vertical bars passing through the top rail and welded top and bottom, with weld length ≥ 50% of bar perimeter.
10. No vegetation clearance should be undertaken during the bird nesting season between March and August inclusive unless checked immediately prior to cutting by a suitably qualified ecologist to confirm that no active nests are present. No disturbance is permitted if an active nest is found.

General Notes

© Nicholas Pearson Associates Ltd. All rights reserved. Nicholas Pearson Associates assert (unless otherwise agreed in writing) their rights under s.77 to 89 of the Copyright, Designs and Patents Act 1988.

This drawing has been prepared in good faith, with all reasonable skill, care and diligence, based on information provided or available at the time of its preparation and within the scope of work agreement with the client. Any information provided by third parties and referred to herein has not been checked or verified by Nicholas Pearson Associates Ltd., unless otherwise expressly stated in the drawing
We disclaim any responsibility to the client and others in respect of any matters outside the scope of the above. The drawing is provided for the sole use of the named client. No third party may rely upon this drawing without the prior and express written agreement of Nicholas Pearson Associates Ltd.
This drawing may be scaled for the purposes of Planning Applications, Land Registry and for Legal plans where the scale bar is used, and where it verifies that the drawing is an original or an accurate copy. It may not be scaled for construction purposes.
This drawing must not be used for implementation on site unless issued for construction purposes.
Discrepancies and/or ambiguities between this drawing and information given elsewhere must be reported immediately to this office for clarification before proceeding.

Revisions

Status	Revision Note	Date	Drawn	Checked	Approved
P01	Issued for RBC planning application submission	15/05/2026	TB	TB/JF	JF

Project

Whiteknights Campus Boundary Replacement Fence

Drawing

Typical Fence & Gate Details

Drawing Number

30303 NPA WK ZZ DR L 7100

Suitability	Revision	Purpose
S4 For Approval	P01	Planning
Scale	**Page Size**	**Origin Date**
Varies	A1	14/04/2026

Client

University of Reading

NICHOLAS PEARSON ASSOCIATES

ENVIRONMENTAL DESIGN | LANDSCAPE ARCHITECTURE | ECOLOGY | VISUALISATION
npa@cons@lt.co.uk npa@visuals.co.uk +44 (0)1225 876990 The Farm House, Church Farm Business Park, Corston, Bath BA2 9AP

Ordnance Survey Mapping © Crown Copyright 2026 OS 100018702