Reading Gateway Retail Park, RG2 0GG

Arboricultural Report containing:

- **Arboricultural constraints**
- **Arboricultural impact assessment (AIA)**
- **Tree protection**
- **Arboricultural method statement**

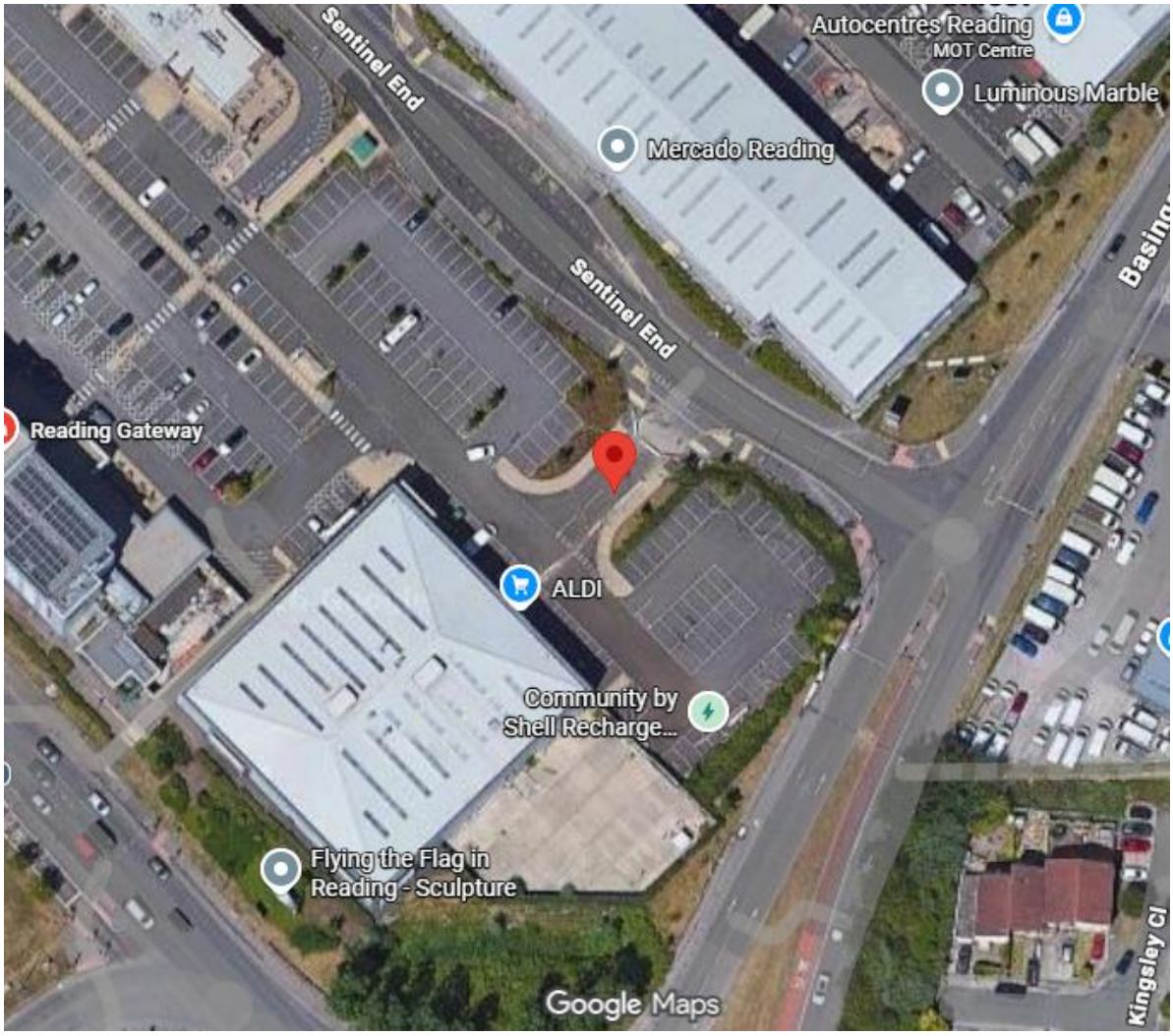

On behalf of
RawCharging

Prepared by:
Deb Randall BSc TechArborA
Arboricultural Consultant
February 2026

Content

1.0 Instructions/Scope
2.0 Survey methodology
3.0 Report limitations
4.0 Legal duty
5.0 Site and Tree assessment
6.0 Arboricultural constraints
7.0 Arboricultural impact assessment (AIA)
8.0 Tree protection
9.0 Arboricultural method statement
10.0 Contact details
11.0 References
12.0 Appendices

- Tree schedule sheet
- Tree constraints plan (TCP)
- Arboricultural impact assessment plan (AIA)
- Tree protection plan (TPP)
- BS5837:2012 Trees in relation to construction: Recommendations Protective Fencing Detail
- Protective fencing sign

The Cottage, High Street, Iron Acton, Bristol, BS37 9UG
t: 01454 227458 m: 07775576738 e: chris@silverbackarb.co.uk w: www.silverbackarb.co.uk

1.0 Instructions/Scope

Silverback Arboricultural Consultancy have been instructed to compile an arboricultural report containing tree survey, tree constraints plan, arboricultural impact assessment, tree protection plan, and arboricultural method statement regarding trees growing within and adjacent to land at Aldi, 4 Gateway Retail Park Unit 6, Reading, RG2 0GG. This report is intended to accompany a planning application relating to the installation of new car charging points and substation with associated works. This document has been produced to demonstrate that the implications of the proposed development to the existing trees has been fully considered during the detailed design process.

1.1 Recommendations for the safeguarding of trees in close proximity to development are set out in BS5837:2012 Trees in relation to design, demolition and construction – Recommendations. We have therefore carried out the assessment of the trees in accordance with that document.

1.2 Specifically, this report and the accompanying information are supplied to:

- Identify the constraints that trees on and adjacent to the site present to the development of the site to inform the site design process.
- Present information regarding the above ground constraints (crown spreads) and below ground constraints (Root Protection Areas – RPAs), in a Tree Schedule and on a Tree Constraints Plan (TCP).
- Assess the impact of the proposed development on the trees on or adjacent to the site and the impact that retained trees will have on the site post development.
- Identify trees to be removed, trees to be retained, and specify measures necessary to protect retained trees during the construction phases of the development.
- Recommend necessary remedial tree works to be undertaken to trees that will be retained prior to commencement of the construction phases of the development.
- Present information regarding the location of protective barriers or fencing and ground protection on a Tree Protection Plan (TPP).
- Identify special engineering, excavation or protection measures intended to minimise the impact on retained trees where the site design layout requires a breach of the Root Protection area (RPA).

- Provide an Arboricultural Method Statement for the recommended works detailing measures which should be implemented to protect retained trees during the construction phases of the development.

1.3 This report is based on a ground level assessment of the trees. A site survey was undertaken by Deb Randall BSc (Hons) *TechArborA*, technical member of the Arboricultural Association and a Lantra certified Professional Tree Inspector with over five years' experience in the industry, and Chris Wright *M.Arbor.A* a professional member of the Arboricultural Association and Lantra certified Professional Tree Inspector with over thirty years' experience in the industry. The site was visited on Tuesday 10th February 2026. The weather was bright with good visibility.

1.4 Documents Provided

- Existing layout dwg Nº CA-RGW-2026-01 Rev A
- Proposed site layout dwg Nº CA-RGW-2026-01a

2.0 Survey Methodology

The survey includes tree and shrubs with a stem diameter over 75mm at 1.5m height, located within the area shown on the plan included in this report.

2.1 All inspections were made from ground level with the use of binoculars, sounding hammer, and metal probe where necessary, using the Visual Tree Assessment method (Mattheck & Breloer, 1994). The presence and condition of bark and stem wounds, cavities, decay, fungal fruiting bodies, and any structural defects that could affect the structural integrity of the trees have been noted.

2.2 Tree numbers have been noted on the plan. The following details were recorded for each tree and are included in the tree schedule sheets accompanying this report:

Number: an identity number for each tree, prefixed with a 'T' which cross references locations shown on the plan with the tree survey sheets. Where several trees, normally of the same species, are located close together and are similar in character and requirements, they have been treated as a Group under a single number, prefixed with a 'G'

Species: common name and botanical name in *italics*

Tree Height: approximate height in metres

Stem Diameter: diameter measured in millimetres, taken at 1.5m above ground. Where the tree is multi-stemmed the diameter is calculated in accordance with BS5837:2012

(# estimated dimensions for off-site or inaccessible trees)

Crown spread: approximate spread in metres taken at the four main compass points N, E, S, W

Crown clearance: approximate height from ground to lowest part of canopy

Age class: Young, Semi Mature, Early Mature, Mature, Over-Mature, Veteran

Structural condition: Good, Fair, Poor, Collapsed

Physiological condition: Good, Fair, Poor, Diseased, Dead

Observations: observations noted during tree inspections

Preliminary recommendations: recommended action to ensure the health and safety of the tree.

Remaining contribution (years): <10**,** 10+, 20+, 40+

BS Cat - category grading in accordance with BS 5837:2012

A - trees of high quality with an estimated remaining life expectancy of at least 40 years.

B - trees of moderate quality with an estimated remaining life expectancy of at least 20 years.

C - trees of low quality with an estimated remaining life expectancy of at least 10 years, or young trees with a stem diameter below 150mm.

U - trees in such a condition that they cannot realistically be retained as living trees in the context of the current land use for longer than 10 years.

BS Sub Cat - sub-category grading in accordance with BS 5837:2012

1- Mainly arboricultural qualities

2- Mainly landscape qualities

3- Mainly cultural values including conservation

RPA – **R**oot **P**rotection **A**rea - measured in metres from the centre of the tree stem.

2.3 Presentation of the Data Collected

- Data collected regarding individual trees and groups of trees are presented in the Tree Schedule table (appendix 1) in accordance with BS5837:2012 Trees in Relation to Construction – Recommendations.
- The data significant to the proposed site layout is also presented on the Tree Constraints Plan (Drawing Number 260217-RG-TCP-SD (appendix 2) and Arboricultural Impact Assessment Plan (Drawing Number 260217-RG-AIA-SD (appendix 3).
- All other relevant data are presented within the main body of this report.

The Cottage, High Street, Iron Acton, Bristol, BS37 9UG
t: 01454 227458 m: 07775576738 e: chris@silverbackarb.co.uk w: www.silverbackarb.co.uk

- Trees have been allocated an individual tree number. This tree number is used to identify individual trees and/or groups of trees throughout this report, within the Tree Schedule sheets, and on all plans presented in the appendices of this report.

3.0 Report Limitations

Trees are living, dynamic organisms that can be affected by external conditions. It is therefore not possible to state with any certainty that a tree is safe.

3.1 No internal decay devices or other invasive tools to assess tree condition were used. No soil excavation or root inspection was undertaken. Except where stated, all dimensions are estimated. We were not presented with any information on the soil type and no soil samples have been taken.

3.2 This report has not considered the effect that trees or vegetation may have on the structural integrity of adjacent buildings or structures.

3.3 The survey contained within this report is not a tree safety inspection. It has been carried out to inform the planning process. Where clear and obvious hazards have been observed, these have been addressed in the recommendations contained within the tree schedule sheets (appendix 1). A full assessment of the levels of risk posed by trees would be informed by considering site use together with hazards present within the aerial parts of a tree(s). Changes in site use are likely to occur during, and result from, the proposed development. In the light of these changes, regular tree risk assessments are advised.

3.4 While this appraisal is not a tree risk assessment it nonetheless considers observed structural defects of the inspected trees to inform conclusions regarding their retentive worth.

3.5 Tree condition can change rapidly, the recommendations contained within this report are based on the condition of the tree at the time they were inspected. Any amendments to the design or position of the proposed development will invalidate this report.

.

4.0 Legal duty

4.1 It is the responsibility of the tree owner to ensure that their tree(s) is in a safe and stable condition, including the effects of root activity, through duty of care in the Occupiers Liability Act (1957 & 1984).

4.2 The Wildlife and Countryside Act, 1981 makes it an offence to disturb a nesting bird or recklessly endanger a bat or its roost. Professional advice should be sought, where relevant, before undertaking any recommended works.

4.3 Searches of Reading Borough Council's online mapping system showed there are no Tree Preservation Orders or other statutory constraints covering the trees on the site.

5.0 Tree and Site Assessment **(to be read in conjunction with the survey schedule sheets)**

5.1 The proposed development is for the construction of new car charging spaces with pillar feeders and a new substation on the site. The area proposed for development currently comprises of the existing Aldi car park containing hardstanding bordered by soft landscape planting verges at the edges of the car park. The planting beds contain a number of semi-mature, mixed species trees previously planted as heavy standards. There is a hedgerow bordering the planting bed at the southeast end of the car park.

5.2 No significant defects were visible at the time of inspection. Overall, the majority of trees are considered to be in good structural and physiological condition and of moderate quality and value.

5.3 Seventeen trees and one hedgerow was surveyed. Of the trees surveyed, three trees were categorised A, nine trees were categorised B, the remaining trees and hedgerow was categorised C. The trees were assessed and categorised in accordance with the Cascading Chart of Tree Quality Assessment contained within BS5837:2012.

6.0 Arboricultural Constraints

Trees have a widely spreading, shallow root system. In most cases, the majority of tree roots are situated within the top 600mm of soil although some roots may extend down to 2m. Small feeder roots can also be expected to extend beyond the outer edge of the canopy. Roots can therefore be easily damaged by construction activity.

6.1 Constraints on the design of the development are presented in the Tree Schedule Sheets (appendix 1), Tree Constraints Plan (appendix 2) and the Arboricultural Impact Assessment Plan (appendix 3). These constraints are also considered in the main body of the report below and recommended remedial works and mitigating measures.

6.2 The Tree Constraints Plan (TCP) shows the Root Protection Areas (RPAs) for the individual trees identified in the tree schedule tables. This represents the minimum area in m^2 which ideally should be left undisturbed around each tree were it to be retained. The TCP/ AIA also shows a representation of the crown spread of each tree measured in four cardinal directions. The RPA has been calculated in accordance with Section 4.6 of BS5837:2012 Trees in relation to design, demolition and construction – Recommendations.

6.3 Trees Identified for Retention and Removal.

It is proposed to remove T04, T05, and a section of H01 to facilitate the proposed development. The remaining trees and hedgerow will be retained and protected throughout the proposed development.

6.4 Mitigation

6.4.1 It is proposed to mitigate for the loss of these trees by the implementation of a landscaping scheme including replacement trees and shrubs to enhance that landscape and visual amenity of the site. The details and specification for the proposed landscaping will be agreed with the Local Planning Authority.

6.5 Trees Outside Site Boundary

There are no trees outside of the site boundary which are impacted by the proposed development.

7.0 Arboricultural Impact Assessment

7.1 The position of the proposed layout is outside the calculated Root Protection Area (RPA) of retained trees. Any excavation or soil compaction in this area could potentially lead to root severance or damage. This could subsequently lead to a reduction in the trees ability to take up water and nutrients, which may lead to a deterioration in the tree's health.
Protective fencing, in accordance with BS5837:2012, will be erected to prevent any un-authorised access into the Root Protection Area (RPA) during the development works.

7.2 Storage and mixing of construction materials could lead to soil compaction and ground contamination through spillage.
All storage and mixing of materials will be undertaken outside the Root Protection Area (RPA) of the retained trees. If considered necessary, due to ground levels, a suitable waterproof ground covering with bunds at the edges to prevent leakage will be laid over the storage, mixing area.

7.3 Overhanging and low branches could potentially be damaged during the erection of scaffolding or during the delivery of materials to site.
The protective fencing will enclose the branch spreads of the retained trees preventing any potential damage to the tree canopies.

7.4 Drainage and service routes in association with the proposed development have been planned outside the calculated Root Protection Area of any trees proposed for retention.
Should this change, installation of drainage or services runs will be in accordance with Section 7.7 (Underground and above-ground utility apparatus) of BS5837:2012.

7.5 **Shading: -** Potential shading of buildings by retained trees can lead to pressure for the pruning or removal of the trees. *BS5837: 2012 par 5.3* states that proposed buildings should be designed to take account existing trees, their ultimate size and density of foliage, and the effect that these will have on the availability of light.
There are no shading issues associated with the proposed development.

7.6 **Future growth: -** Future extension growth of branches can result in the continuous whipping of branches against the fabric of a building or damage to the roof tiles. Structures should therefore be located with due consideration for a tree's ultimate growth**.**

It is considered that the retained trees are at a sufficient distance from the proposed layout for there to be no issues.

8.0 Tree Protection

The trees to be retained on site during and after development as listed in Section 6.3 will require both above and below ground protection. Above ground protection may involve remedial tree surgery works. These works, where applicable, are presented in the Tree Schedule Sheets (appendix 1) and are discussed in Section 8.1 below.

8.0.1 Below ground protection measures, based on the root protection areas (RPA), indicated in the Tree Constraints Plan, will involve the erection of tree protection barriers as discussed in Section 8.2. The tree protection fencing is illustrated in Tree Protection Plan (Drawing Number 260217-RG-TPP-SD) (appendix 4).

8.0.2 The potential position of tree roots as indicated in the Arboricultural Impact Assessment Plan and Tree Protection Plan are only guidelines based on calculations shown in BS5837:2012 'Trees in relation to design, demolition and construction – Recommendations'.

8.1 Recommended Remedial Tree Surgery Works

Remedial tree work specifications are discussed in section 8.1.1 below. All works will be undertaken in accordance with BS3998:2010 Tree Work Recommendations and should be undertaken by a suitably qualified and experienced Tree Surgery contractor.

8.1.1 It is intended to remove T04, T05 and a section of H01 to facilitate the proposed development.

8.2 Tree Protection Fencing

The Tree Protection Plan indicates the location of the proposed tree protection barriers where appropriate. These barriers will create a Construction Exclusions Zone (CEZ) around the retained trees.

8.2.1 The Construction Exclusion Zones will be erected in accordance with the recommendations in Section 6.2 of BS5837:2012. The specifications for the barriers are presented in Figure 3 from BS5837:2012 (appendix 5).

8.2.2 It is *essential* that tree protection fencing barriers are erected before any site preparation or construction work be commenced. (Remedial tree works however, should be undertaken before such fencing is erected – See Section 8.1). Once erected, the protective fencing will be retained and maintained in position for the duration of the development.

8.2.3 Should any construction activity require the repositioning of the tree protection barriers, advice will be sought from Silverback Arboricultural Consultancy and approval requested from the Local Authority Tree Officer before any of the fencing is altered.

9.0 Arboricultural Method Statement

This section sets out the basis of the methodology for all works in relation to the proposed development in proximity to trees located within the site boundary.

9.0.1 Copies of the Arboricultural Method Statement document will be available for inspection on site and will form the basis of the management of all works relating to the trees on the site for the Site Agent/Manager following commencement of the project.

9.1 Programme of Works

- Arboricultural works
- Erection of protective barriers
- Construction of proposed development

9.2 Arboricultural Works

The work recommendations discussed in Section 9.2.1 set out the proposed works to trees within the development site. These works will be carried out before commencement of other site operations including the erection of protective barriers. The proposed tree works will be undertaken by a professional arboriculturist in accordance with the recommendations contained in BS3998:2010 Tree work-recommendations.

9.2.1 The removal of T04, T05 and a section of H01 will be undertaken to facilitate the proposed development. The remaining trees and hedgerow will be retained and protected throughout the proposed construction works.

9.3 Tree Protection Fencing

BS5837:2012 recommends the erection of protective fencing around retained trees before development commences. The position of the fencing is calculated using the tree's diameter (DBH) measured at 1.5m up the stem. The area within the fencing is called the Root Protection Area (RPA). It is proposed to erect the protective fencing as indicated on the Tree Protection Plan (TPP). This will create a Construction Exclusion Zone (CEZ).

9.3.1 The protective fencing will be constructed in accordance with BS5837:2012 'Trees in relation to design, demolition and construction – Recommendations'. This will consist of weld mesh panels positioned in rubber feet braced with stabilizer struts secured with ground pins, in accordance with Figure 3 of BS5837:2012 'Trees in relation to design, demolition and construction – Recommendations' (appendix 5).

9.3.2 Once erected, the protective fencing will be retained and maintained in position for the duration of the development. If it is necessary to move the protective fencing advice will be sought from Silverback Arboricultural Consultancy and approval requested from the Reading Borough Council Tree Officer before any of the fencing is altered.

9.3.3 Weatherproof signage will be attached to the fencing indicating its function as illustrated (appendix 6).

9.3.4 In the CEZ (construction exclusion zone):

- There must be no alteration of ground levels, including soil stripping other than those detailed within this report
- Any installation of drainage or services will be in accordance with Section 7.7 (Underground and above-ground utility apparatus) of BS5837:2012.
- Oil, bitumen, cement or other harmful materials will not be stored, mixed or discharged within 10m of any retained trees
- Fires will not be lit beneath or within 10m upwind of tree canopies

9.4 Supervision and Monitoring

The project arboricultural consultant will be employed to oversee operations relating to works close to or within Root Protection Areas of retained trees and to issue a site inspection report of practical completion for the following operations:

- The erection of protective barriers around the retained trees in accordance with TPP (appendix 4)

9.4.1 A record of site visits completed by the project arboriculturist will be maintained for inspection on site and copies are forwarded to the Local Planning Authority Tree Officer.

9.4.2 This development will be overseen Silverback Arboricultural Consultancy. If there are any alterations to the proposed working methodology necessary, works will be stopped until the arboricultural consultant has been notified and agreement reached with the Local Planning Authority Tree Officer.

10.0 Contact Details

10.1 **Arboricultural Consultant**

Chris Wright
Silverback Arboricultural Consultancy
E-mail: chris@silverbackarb.co.uk

10.2 **Local Authority**

Reading Borough Council

11.0 References

Mattheck, C. and Breloer, H. (1994). The Body Language of Trees: A handbook for failure analysis. Research for Amenity Trees **4**. HMSO, London.

British Standard 5837:2012 - Trees in relation to design, demolition and construction – Recommendations. British Standards Institution, London

British Standard 3998:2010 - Tree Work Recommendations. British Standards Institution, London

12.0 Appendices

- Tree schedule sheets
- Tree constraints plan
- Arboricultural impact assessment (AIA)
- Tree protection plan
- BS5837:2012 Trees in relation to construction: Recommendations Protective Fencing Detail
- Protective fencing sign

Deb Randall BSc TechArborA

Arboricultural Consultant

Silverback Arboricultural Consultancy

17th February 2026

Arboricultural Survey Reading Gateway Retail Park

Tree Number	Common name	*Botanical name*	Height (m)	Number of stems	Calculated stem diameter (mm)	Crown Spread (m)				Crown Clearance (m)	Life Stage	Structural Condition	Physiological Condition	Observations	Preliminary Recommendations	Remaining contribution (yrs)	BS Catergory	Root Protection Area Radius (m) Area m2
						N	E	S	W									
H01	Mixed species	Mixed species	1	1	90	0.5	0.5	0.5	0.5	0	Early Mature	Fair	Good	Mixed species border hedgerow No significant defects visible at time of inspection	No action required at the time of inspection.	20-40 Years	C2	Radius: 1.1m. Area: 4 sq m.
T01	Common lime	*Tilia x vulgaris*	4	1	110	1	1	1	1	1.5	Semi Mature	Good	Good	Growing in planting border No significant defects visible at time of inspection	No action required at the time of inspection.	40+ Years	A1,2	Radius: 1.3m. Area: 5 sq m.
T02	London plane	*Platanus x hispanica*	5	3	140	1	1	1	1	1	Semi Mature	Fair	Fair	Growing in planting border Planting stake included in bark Multi- stemmed from base Included bark at stem union	No action required at the time of inspection.	20+ Years	C2	Radius: 1.7m. Area: 9 sq m.
T03	Buddleia	*Buddleia sp.*	2	1	80	1	1	1	1	0	Early Mature	Fair	Good	Growing in planting border Multi- stemmed shrub	No action required at the time of inspection.	20+ Years	C2	Radius: 1.0m. Area: 3 sq m.
T04	Common lime	*Tilia x vulgaris*	4	1	110	1	1	1	1	0.5	Semi Mature	Good	Good	Growing in planting border No significant defects visible at time of inspection	No action required at the time of inspection.	40+ Years	A1,2	Radius: 1.3m. Area: 5 sq m.
T05	Hornbeam	*Carpinus betulus*	4	1	80	0.5	0.5	0.5	0.5	0.5	Semi Mature	Good	Good	Growing in planting border No significant defects visible at time of inspection	No action required at the time of inspection.	40+ Years	B2	Radius: 1.0m. Area: 3 sq m.
T06	Common lime	*Tilia x vulgaris*	6	1	140	1.5	1.5	1.5	1.5	2	Semi Mature	Good	Good	Growing in planting border No significant defects visible at time of inspection	No action required at the time of inspection.	40+ Years	A1,2	Radius: 1.7m. Area: 9 sq m.

Compiled: February 2026

Arboricultural Survey Reading Gateway Retail Park

Tree Number	Common name	*Botanical name*	Height (m)	Number of stems	Calculated stem diameter (mm)	Crown Spread (m)				Crown Clearance (m)	Life Stage	Structural Condition	Physiological Condition	Observations	Preliminary Recommendations	Remaining contribution (yrs)	BS Catergory	Root Protection Area Radius (m) Area m2
						N	E	S	W									
T07	Hornbeam	*Carpinus betulus*	4	1	80	0.5	0.5	0.5	0.5	1.5	Semi Mature	Good	Good	Growing in planting border No significant defects visible at time of inspection	No action required at the time of inspection.	40+ Years	B2	Radius: 1.0m. Area: 3 sq m.
T08	Swedish whitebeam	*Sorbus intermedia*	5	1	90	1	1	1	1	1.5	Semi Mature	Good	Good	Growing in planting border No significant defects visible at time of inspection	No action required at the time of inspection.	40+ Years	B2	Radius: 1.1m. Area: 4 sq m.
T09	Swedish whitebeam	*Sorbus intermedia*	5	1	100	1	1	1	1	1.5	Semi Mature	Good	Good	Growing in planting border No significant defects visible at time of inspection	No action required at the time of inspection.	40+ Years	B2	Radius: 1.2m. Area: 5 sq m.
T10	Chanticleer pear	*Pyrus calleryana 'Chanticleer'*	5	1	90	0.5	0.5	0.5	0.5	1.5	Semi Mature	Good	Good	Growing in planting border No significant defects visible at time of inspection	No action required at the time of inspection.	40+ Years	B2	Radius: 1.1m. Area: 4 sq m.
T11	Hornbeam	*Carpinus betulus*	3	1	80	0.5	0.5	0.5	0.5	0.5	Semi Mature	Fair	Fair	Growing in planting border Wound from planting stake, calloused Lost leader	No action required at the time of inspection.	10+ Years	C2	Radius: 1.0m. Area: 3 sq m.
T12	Swedish whitebeam	*Sorbus intermedia*	5	1	100	1	1	1	1	1.5	Semi Mature	Good	Good	Growing in planting border No significant defects visible at time of inspection	No action required at the time of inspection.	40+ Years	B2	Radius: 1.2m. Area: 5 sq m.
T13	Swedish whitebeam	*Sorbus intermedia*	5	1	90	1	1	1	1	1.5	Semi Mature	Good	Good	Growing in planting border No significant defects visible at time of inspection	No action required at the time of inspection.	40+ Years	B2	Radius: 1.1m. Area: 4 sq m.

Arboricultural Survey Reading Gateway Retail Park

Tree Number	Common name	*Botanical name*	Height (m)	Number of stems	Calculated stem diameter (mm)	Crown Spread (m)				Crown Clearance (m)	Life Stage	Structural Condition	Physiological Condition	Observations	Preliminary Recommendations	Remaining contribution (yrs)	BS Catergory	Root Protection Area Radius (m) Area m2
						N	E	S	W									
T14	Swedish whitebeam	*Sorbus intermedia*	4	1	80	0.5	0.5	0.5	0.5	1.5	Semi Mature	Fair	Fair	Growing in planting border Historic wounds up stem, calloused	No action required at the time of inspection.	20+ Years	C2	Radius: 1.0m. Area: 3 sq m.
T15	Swedish whitebeam	*Sorbus intermedia*	5	1	80	1	1	1	1	1.5	Semi Mature	Good	Good	Growing in planting border No significant defects visible at time of inspection	No action required at the time of inspection.	40+ Years	B2	Radius: 1.0m. Area: 3 sq m.
T16	Swedish whitebeam	*Sorbus intermedia*	5	1	90	1	1	1	1	1.5	Semi Mature	Good	Good	Growing in planting border No significant defects visible at time of inspection	No action required at the time of inspection.	40+ Years	B2	Radius: 1.1m. Area: 4 sq m.
T17	Swedish whitebeam	*Sorbus intermedia*	5	1	80	0.5	0.5	0.5	0.5	1.5	Semi Mature	Fair	Fair	Growing in planting border Historic wounds up stem, calloused Suppressed by light	No action required at the time of inspection.	20+ Years	C2	Radius: 1.0m. Area: 3 sq m.

Silverback
arboricultural consultancy ltd

01454 227458 / 07775 576738 / chris@silverbackarb.co.uk

Site: Reading Gateway Retail Park	
Drawing Title: Tree Constraints Plan	1:500 at A3
Drawing Number: 260217-RG-TCP-SD	February 2026

Key:

- Category A
- Category B
- Category C
- Category U

Category — Crown Spread
13 — Tree Number
Root Protection Area

AM — PM

Approximate sweep of shade cast by trees in midsummer, plotted as per description in BS5837: 2012

"An indication of potential direct obstruction of sunlight can be illustrated by plotting a segment, with a radius from the centre of the stem equal to the height of the tree, drawn from due north-west to due east, indicating the shadow pattern through the main part of the day."

NOTE: All tree/group numbers have approximate locations.

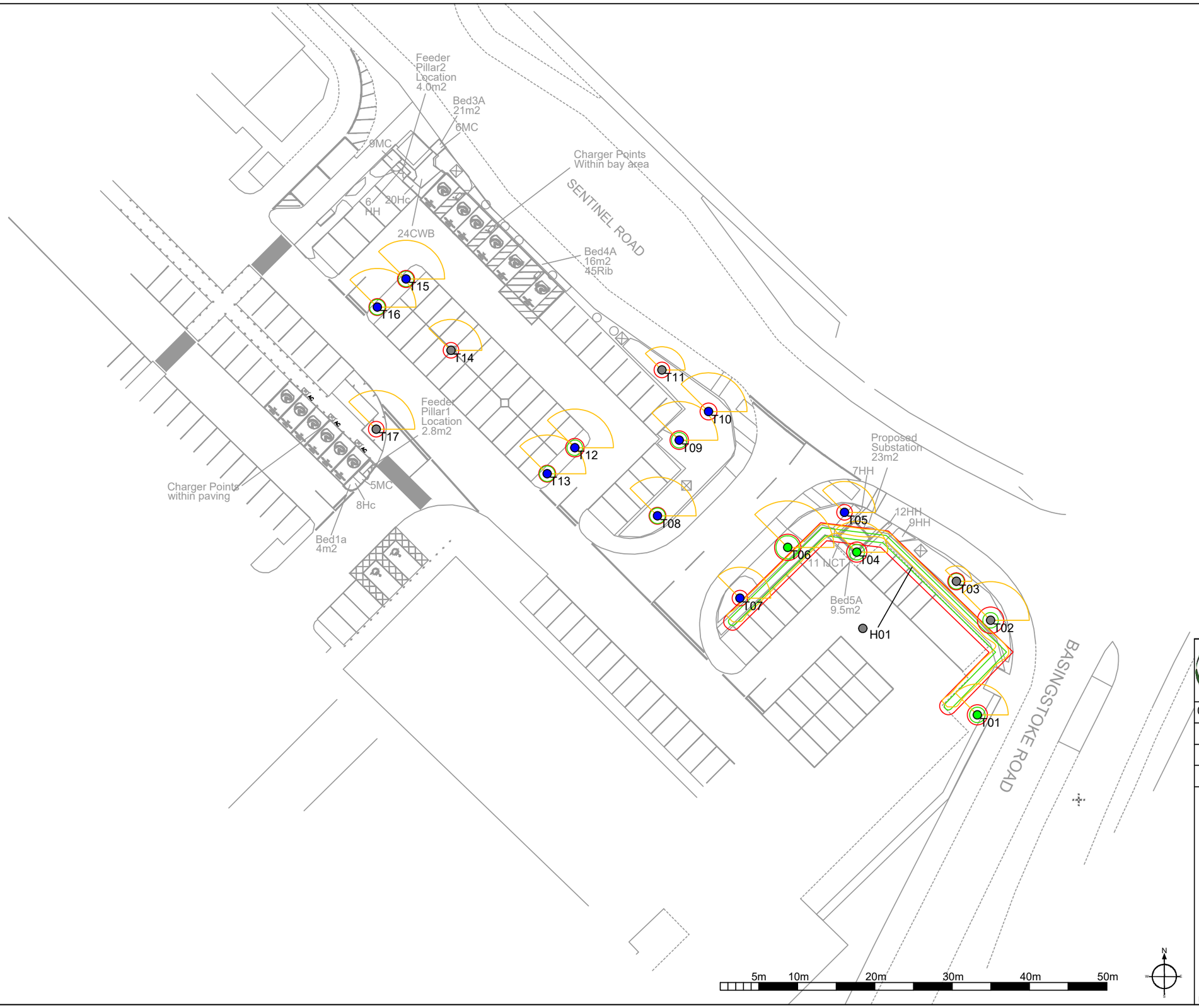

Silverback arboricultural consultancy ltd

01454 227458 / 07775 576738 / chris@silverbackarb.co.uk

Site: Reading Gateway Retail Park

Drawing Title: Arboricultural Impact Assessment	1:500 at A3
Drawing Number: 260217-RG-AIA-SD	February 2026

Key:

- Category A
- Category B
- Category C
- Category U

Category — Crown Spread — 13 — Tree Number — Root Protection Area

AM PM — Approximate sweep of shade cast by trees in midsummer, plotted as per description in BS5837: 2012

"An indication of potential direct obstruction of sunlight can be illustrated by plotting a segment, with a radius from the centre of the stem equal to the height of the tree, drawn from due north-west to due east, indicating the shadow pattern through the main part of the day."

NOTE: All tree/group numbers have approximate locations.

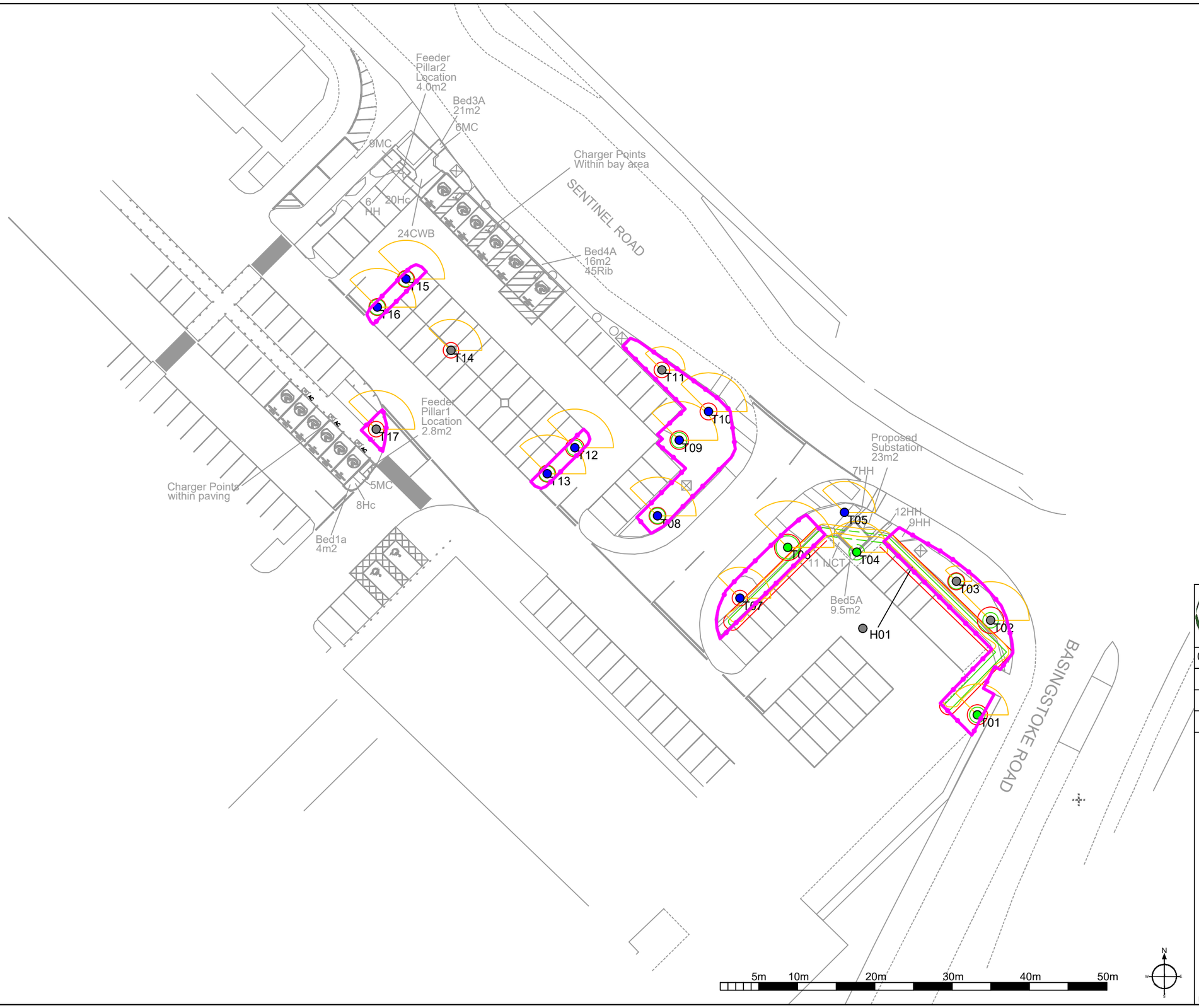

Silverback arboricultural consultancy ltd

01454 227458 / 07775 576738 / chris@silverbackarb.co.uk

Site: Reading Gateway Retail Park

Drawing Title: Tree Protection Plan	1:500 at A3
Drawing Number: 260217-RG-TPP-SD	February 2026

Key:

- Category A
- Category B
- Category C
- Category U

Category — Crown Spread — 13 — Tree Number — Root Protection Area

Proposed Tree for Removal

Tree Protection Fencing

AM PM

Approximate sweep of shade cast by trees in midsummer, plotted as per description in BS5837: 2012

"An indication of potential direct obstruction of sunlight can be illustrated by plotting a segment, with a radius from the centre of the stem equal to the height of the tree, drawn from due north-west to due east, indicating the shadow pattern through the main part of the day."

NOTE: All tree/group numbers have approximate locations.

BS 5837:2012 – TREES IN RELATION TO DESIGN, DEMOLITION AND CONSTRUCTION – RECOMMENDATIONS

EXAMPLES OF ABOVE-GROUND STABILIZING SYSTEMS

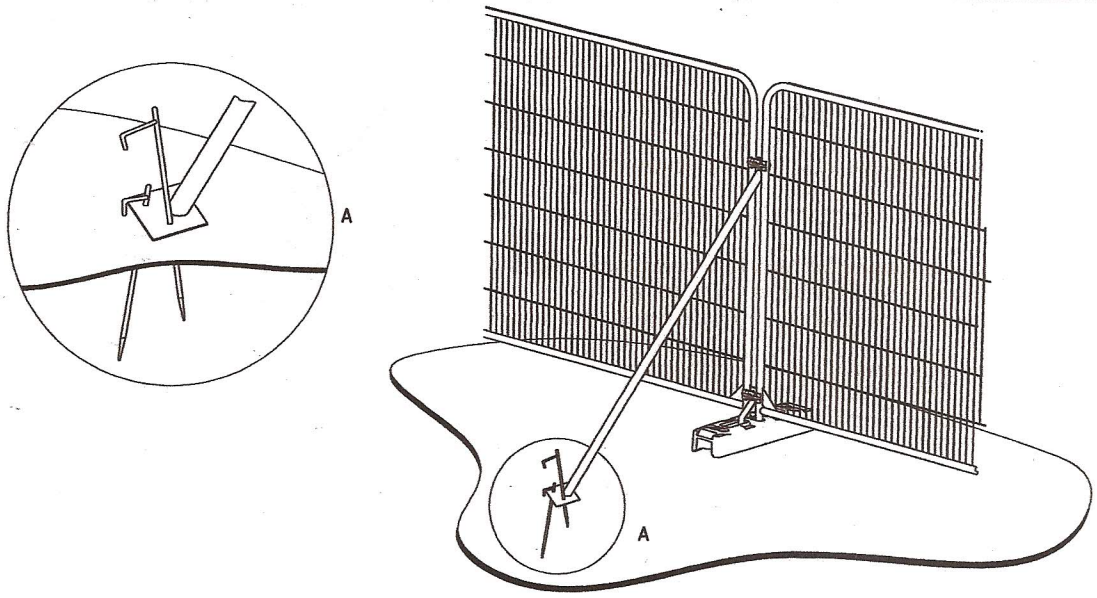

a) Stabilizer strut with base plate secured with ground pins

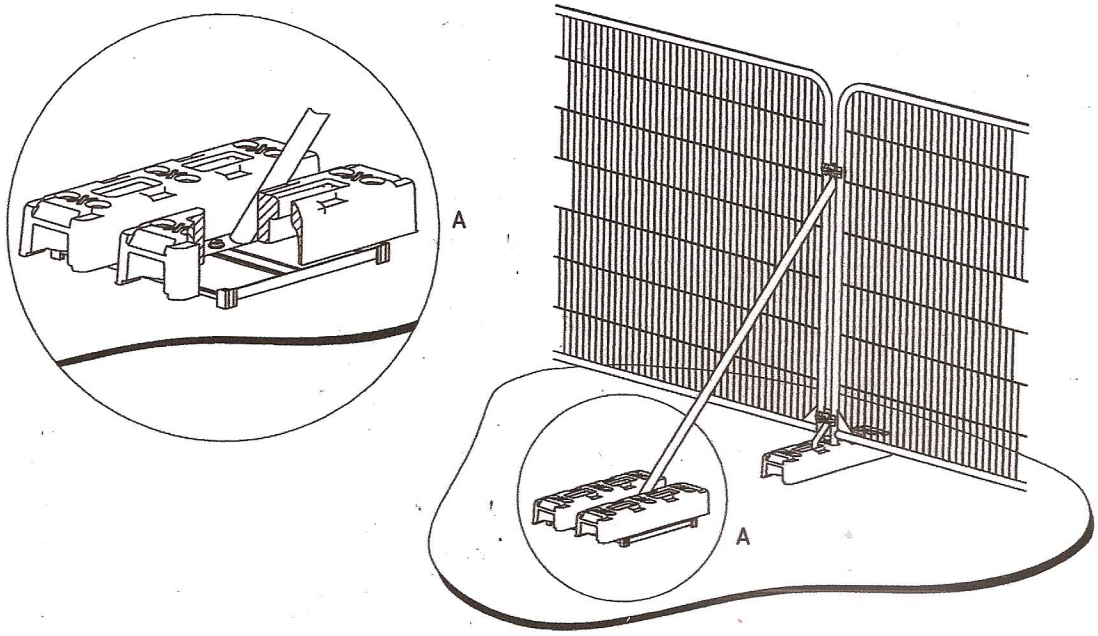

b) Stabilizer strut mounted on block tray

Figure 3 **Examples of above-ground stabilizing systems**

PROTECTIVE FENCING. THIS FENCING MUST BE MAINTAINED IN ACCORDANCE WITH THE APPROVED PLANS AND DRAWINGS FOR THIS DEVELOPMENT.

TREE PROTECTION AREA

KEEP OUT !

(TOWN & COUNTRY PLANNING ACT 1990)

TREES ENCLOSED BY THIS FENCE ARE PROTECTED BY PLANNING CONDITIONS AND/OR ARE THE SUBJECTS OF A TREE PRESERVATION ORDER.

CONTRAVENTION OF A TREE PRESERVATION ORDER MAY LEAD TO CRIMINAL PROSECUTION

ANY INCURSION INTO THE PROTECTED AREA MUST BE WITH THE WRITTEN PERMISSION OF THE LOCAL PLANNING AUTHORITY