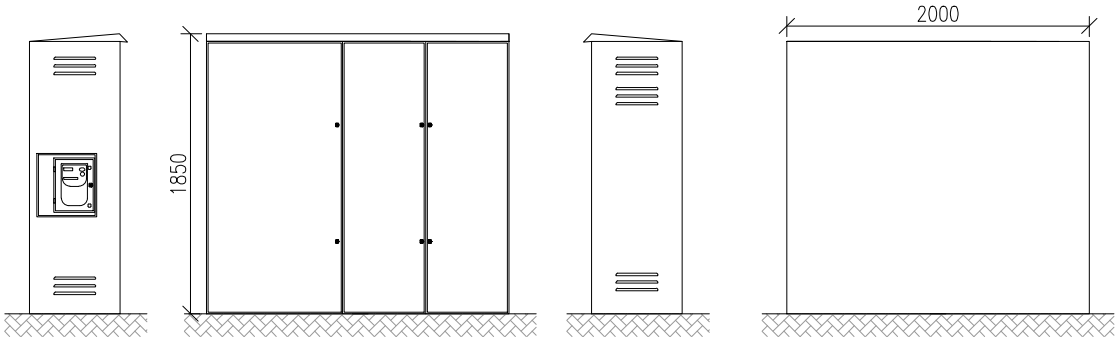

ELEVATIONS

FEEDER PILLAR

(SCALE 1:50)

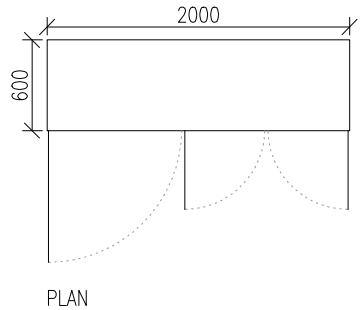

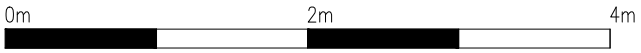

1:50 SCALE BAR

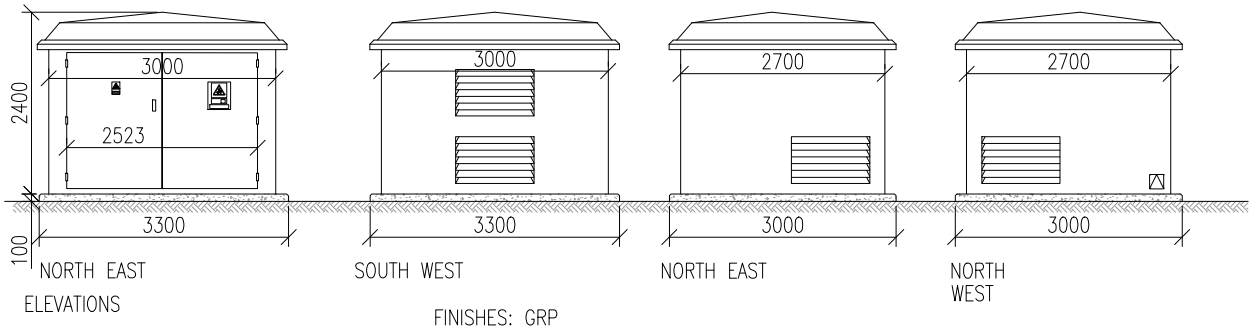

ELEVATIONS

FINISHES: GRP
COLOUR: GREEN

SUBSTATION

(SCALE 1:100)

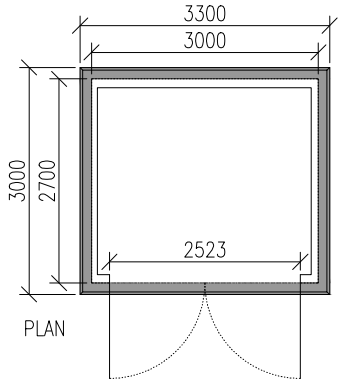

1:100 SCALE BAR

REV	DESCRIPTION	REV BY	APP	DATE
A	LABELS REVISED	KP	DE	19.02.26

ADDRESS	PROJECT NAME	DRAWN BY
READING GATEWAY, GATEWAY PROCTOR END SOUTH, READING RG2 0GG	READING GATEWAY	KP
	DRAWING TITLE FEEDER PILLAR AND SUBSTATION	**SCALE (@ A4)** 1 TO 50
	DRAWING NO D210164 139 05	**REV** A

RAW CHARGING

RAW CHARGING NETWORK LTD
43 PALACE STREET
LONDON
SW1E 5HL