250 Brook Drive, Reading

Arboricultural Method Statement

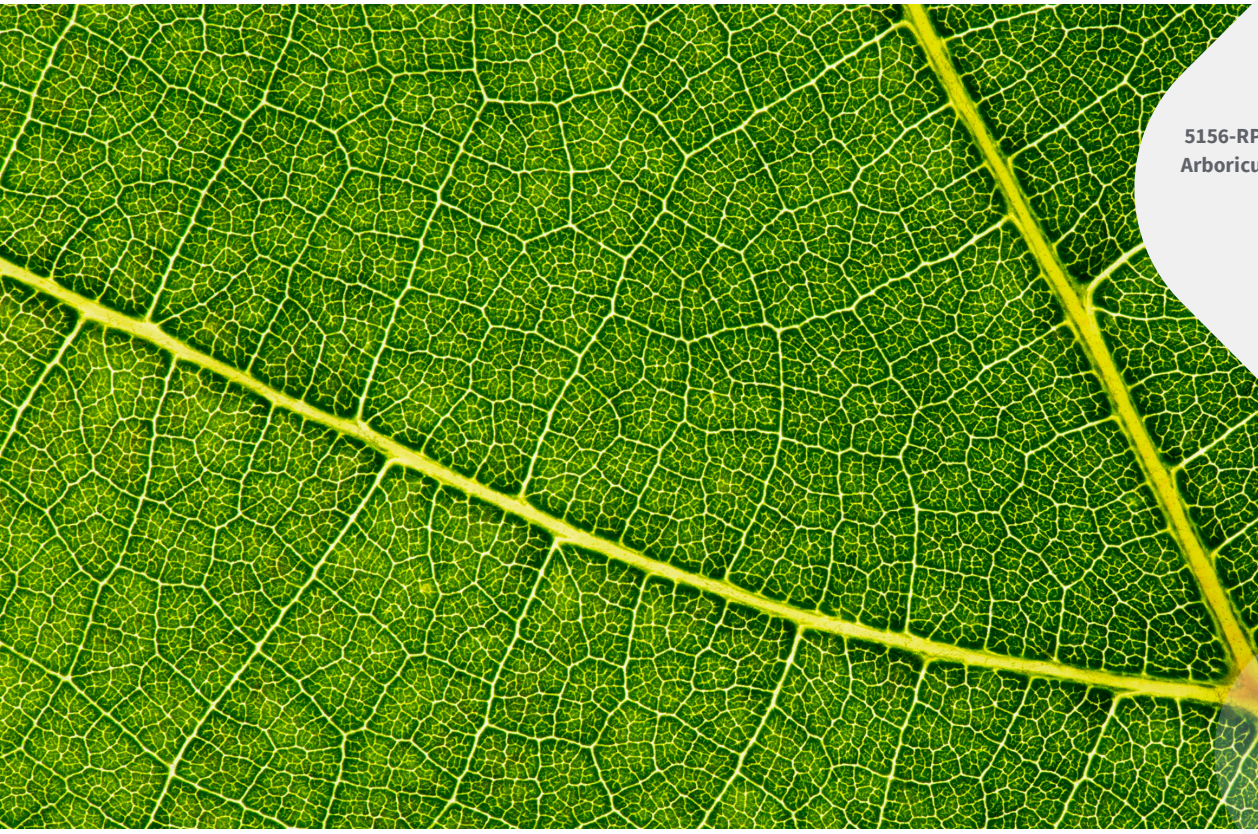

5156-RPS-XX-XX-RP-AR-771-9100
Arboricultural Method Statement
P01
17 February 2026

rpsgroup.com

Quality Management

Version	Status	Authored by	Reviewed by	Approved by	Review date
P01	For Construction	RPS	D. Cox	D. Cox	17.02.2026

Approval for issue

David Cox	David Cox	17 February 2026

File/Model Location

Document location:	Q:\Access D\5156 - Brook Drive, AWE (794-PLN-NPI-00039)\ReportQ:\Access D\5156 - Brook Drive, AWE (794-PLN-NPI-00039)\Report

© Copyright RPS Group Plc. All rights reserved.

The report has been prepared for the exclusive use of our client and unless otherwise agreed in writing by RPS Group Plc, any of its subsidiaries, or a related entity (collectively 'RPS'), no other party may use, make use of, or rely on the contents of this report. The report has been compiled using the resources agreed with the client and in accordance with the scope of work agreed with the client. No liability is accepted by RPS for any use of this report, other than the purpose for which it was prepared. The report does not account for any changes relating to the subject matter of the report, or any legislative or regulatory changes that have occurred since the report was produced and that may affect the report. RPS does not accept any responsibility or liability for loss whatsoever to any third party caused by, related to or arising out of any use or reliance on the report.

RPS accepts no responsibility for any documents or information supplied to RPS by others and no legal liability arising from the use by others of opinions or data contained in this report. It is expressly stated that no independent verification of any documents or information supplied by others has been made. RPS has used reasonable skill, care and diligence in compiling this report and no warranty is provided as to the report's accuracy. No part of this report may be copied or reproduced, by any means, without the prior written consent of RPS.

Prepared by:	Prepared for:
RPS	**AWE**

Contents

1 INTRODUCTION 1
2 SITE LOCATION 3
3 NATIONAL AND LOCAL PLANNING POLICY 6
4 SURVEY METHODOLOGY 7
5 APPRAISAL AND RECOMMENDATIONS 9
6 ARBORICULTURAL IMPACT ASSESSMENT 11
7 ARBORICULTRUAL METHOD STATEMENT 12

Appendices

Appendix A Tree Characteristics Recorded During Survey

Appendix B Tree Survey Schedule

Appendix C Tree Constraints Plan

Appendix D Tree Removal & Protection Plan

Appendix E Example Tree Protection Barriers (BS5837:2012 Fig 2 & 3)

Appendix F Construction Exclusion Zone (CEZ) Sign

Appendix G Arboricultural Glossary

1 INTRODUCTION

1.1 This Arboricultural Method Statement (AMS) has been prepared by Tetra Tech RPS on behalf of AWE in respect of the ancillary structures and surfaces associated with the proposed site wide upgrades works of the existing office unit at 250 Brook Drive, Green Park, Reading, RG2 6UA.

1.2 Specific works include:

Site improvements to include the installation of upgraded footpaths and their associated lighting, additional security measures in the form of bollards, planters, new and replacement CCTV and new ANPR, with associated electrical cabinet; new smoking shelter, bike shelter and associated charging and a new bus drop/pick up point (including waiting shelter and pedestrian barriers) and associated works.

1.3 A tree survey of the application area was carried out by RPS on the 1st of May 2024 in accordance with the requirements of BS5837:2012. The details recorded during the survey can be seen in the Tree Schedule at Appendix B and displayed spatially on the Tree Constraints Plan at Appendix C.

1.4 This report has also been prepared in accordance with the requirements set out in BS5837:2012 'Trees in relation to design, demolition and construction – Recommendations'(BS5837:2012).[1]

1.5 The purpose of this report is to:

- Provide an assessment of the quality of the surveyed trees with reference to the categories and sub-categories listed within Table 1 - BS5837:2012.
- Assess and quantify the arboricultural impact of the proposed development within the survey area, based on the proposed development layout.
- Produce an AMS which details the physical protection of trees to ensure no damage is done to retained trees at the site;
- Provide a Tree Removal and Protection Plan to detail the proposed protective measures to be taken in respect of the trees to be retained during development of the site and to identify the trees that are to be removed.

1.6 The Tree Removal and Protection Plan included in Appendix D identifies the following:

- Trees to be retained
- Trees to be removed
- Alignment and design of protective fencing
- Root Protection Area (RPA) of trees

1.7 This report describes the arboricultural protection measures required as part of the proposed site wide upgrades, to ensure that retained trees are not damaged during the construction process. It provides details on the arboricultural protection measures that will need to be implemented during construction.

1.8 This is a dynamic document intended as a reference point for all site operatives, so a copy will remain with the Site Manager for the duration of the development. The AMS may need to be revised to accommodate alterations to construction methodologies discovered during on site implementation and/or as alterations are required during the detailed design phase as planning matters become approved.

[1] British Standards Institute. British Standard (BS5837) Trees in Relation to Design, Demolition and Construction - Recommendations. 2012.

1.9 Negligence in following the protection measures detailed within this report may result in irreversible damage to the structural and/or physiological condition of retained trees at the site. Retained trees are afforded protection by planning law, so irresponsible and avoidable tree damage the occurs during the construction phase may result in a stop notice or further prosecution by the local planning authority.

2 SITE LOCATION

2.1 The survey covered an area, defined by the client, that currently forms the landscaped grounds and car parking of the existing office unit at 250 Brook Drive. The site is located approximately 0.5 km to the northwest of Reading Football Ground and is bound by Brook Drive to the east and Foudry Brook (a lake/stream) to the northwest and southwest. To the northeast lies a standalone business / office unit and its car parking and landscaped ground at 200 Brook Drive.

2.2 The site is defined as an office / business unit, set within the wider Green Park site. Its landscaped grounds are open, with unimpeded access to the surrounding landscape setting. Its western and southern boundaries are typified by the aquatic character of Foudry Brook.

2.3 The land is roughly centred on OS grid reference SU70406999. The Local Planning Authority (LPA) governing this site is Reading Borough Council.

2.4 The soilscape of the area typically consists of 'loamy and clayey floodplain soils with naturally high groundwater'.[2]

2.5 The site comprised a wide range of tree species, age classifications and qualities. Some trees, with slightly more aged qualities may relate to the land's former usage before the creation of the landscaped business park. These may include the mature Willow and Poplar beside Foudry Brook. Many, if not all, other trees more likely relate to phase of tree planting which relate to the sites business park use. These trees are younger in age status and include a palette of species not uncommon to a designed landscape setting.

2.6 The survey highlighted a wide range of species, with Willow and Poplar providing the species with greatest landscape value.

Tree Preservation Orders & Conservation Areas

2.7 Under the UK planning system, local authorities have a statutory duty to consider the protection and planting of trees when granting planning permission for proposed development. The potential effect of development on trees, whether statutorily protected (e.g. by a tree preservation order or by their inclusion within a conservation area) or not, is a material consideration that is taken into account when dealing with planning applications.

2.8 Trees covered by a **Tree Preservation Order** are protected under the Town and Country Planning Act 1990 (Trees Regulation 2012). The local authority must be consulted, and permission sought for any works that may affect them.

2.9 A desktop investigation using the Reading Borough Councils TPO register[3] confirmed that are **no TPOs within the survey boundary** and that the survey site **is located within a Conservation Area.**

[2] Magic.gov.uk – 25.04.2022

[3] Trees - Reading Borough Council

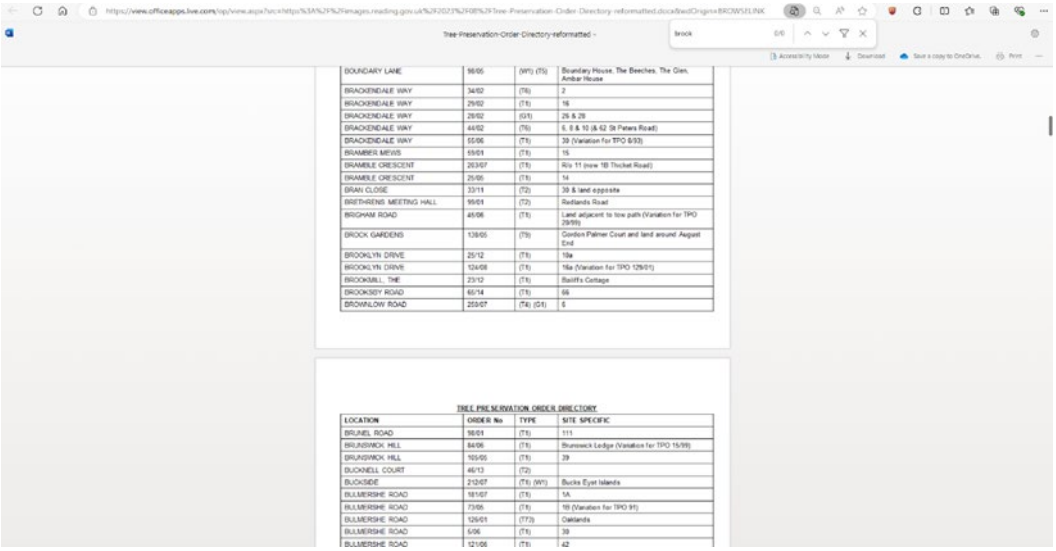

BOUNDARY LANE	98/05	(W1) (T5)	Boundary House, The Beeches, The Glen, Ambar House
BRACKENDALE WAY	34/02	(T6)	2
BRACKENDALE WAY	29/02	(T1)	16
BRACKENDALE WAY	28/02	(G1)	26 & 28
BRACKENDALE WAY	44/02	(T6)	6, 8 & 10 (& 62 St Peters Road)
BRACKENDALE WAY	55/06	(T1)	39 (Variation for TPO 6/93)
BRAMBER MEWS	59/01	(T1)	15
BRAMBLE CRESCENT	263/07	(T1)	4½ 11 (now 1B Thicket Road)
BRAMBLE CRESCENT	25/05	(T1)	14
BRAN CLOSE	33/11	(T2)	39 & land opposite
BRETHRENS MEETING HALL	99/01	(T2)	Redlands Road
BRIGHAM ROAD	46/06	(T1)	Land adjacent to tow path (Variation for TPO 29/99)
BROCK GARDENS	139/05	(T5)	Cordon Palmer Court and land around August End
BROOKLYN DRIVE	25/12	(T1)	19a
BROOKLYN DRIVE	124/08	(T1)	16a (Variation for TPO 129/01)
BROOKMILL, THE	23/12	(T6)	Bailiffs Cottage
BROOKSBY ROAD	60/14	(T1)	68
BROWALOW ROAD	255/07	(T4) (G1)	6

TREE PRESERVATION ORDER DIRECTORY

LOCATION	ORDER No	TYPE	SITE SPECIFIC
BRUNEL ROAD	16/01	(T5)	111
BRUNSWICK HILL	84/06	(T1)	Brunswick Lodge (Variation for TPO 15/99)
BRUNSWICK HILL	105/05	(T1)	39
BUCKNELL COURT	46/13	(T2)	
BUCKSIDE	212/07	(T1) (W1)	Bucks Eyot Islands
BULMERSHE ROAD	181/07	(T1)	1A
BULMERSHE ROAD	73/05	(T1)	19 (Variation for TPO 91)
BULMERSHE ROAD	126/01	(T73)	Oaklands
BULMERSHE ROAD	5/06	(T6)	39
BULMERSHE ROAD	121/06	(T6)	42

2.10 Trees covered by a Tree Preservation Order are protected under the Town and Country Planning Act 1990 (Trees Regulation 2012). The local authority must be consulted, and permission sought for any works that may affect them.

2.11 A Tree Preservation Order (TPO) is an order made by a LPA to protect specific trees, groups of trees or woodlands in the interests of amenity. An Order requires written consent from the LPA for any of the following actions to be carried out to a protected tree:

- cutting down
- topping
- lopping
- uprooting
- wilful damage
- wilful destruction

2.12 If consent is given, it can be subject to conditions which have to be followed. Cutting roots is also a prohibited activity and requires the authority's consent.

2.13 If a tree is not covered by a TPO but is situated within a Conservation Area, similar restrictions apply. Any works required to a tree situated within a Conservation Area must be notified to the LPA, using a 'section 211 notice', 6 weeks before carrying out the work, unless an exception applies.

Ancient Woodland and Veteran Trees

2.14 A desktop investigation using the Magic Map Application[4] confirmed that there are **no areas of Ancient Woodland** on site or within the surrounding area**.**

[4] *Magic.gov.uk – 03.07.2024*

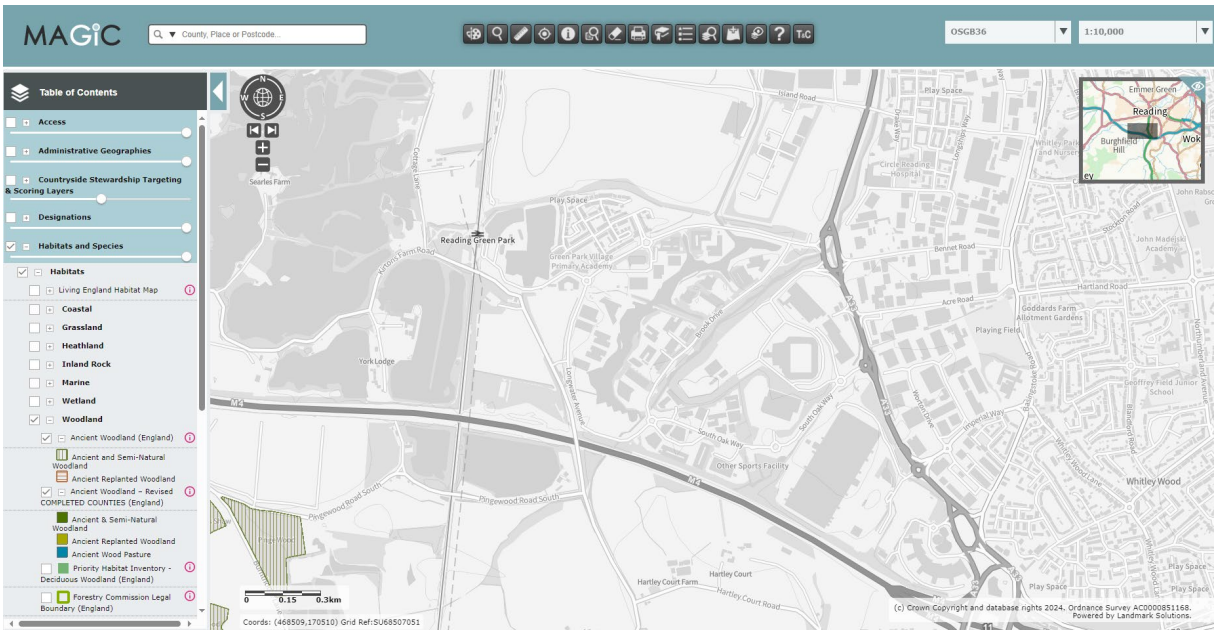

2.15 A desktop investigation using the Ancient Tree Inventory[5] confirmed that there are no veteran trees on or adjacent to the site.

2.16 In accordance with the National Planning Policy Framework (NPPF) (February 2025) section 193(c):

development resulting in the loss or deterioration of irreplaceable habitats (such as ancient woodland and ancient or veteran trees) should be refused, unless there are wholly exceptional reasons and a suitable compensation strategy exists [6]

2.17 Forestry England and Natural England[7] published standing advice for ancient woodlands and ancient and veteran trees in the context of developments, which is a material consideration for LPA. This guidance advises on the minimum RPA calculations which must be used, with minimum distances identified as:

- Fifteen metres between any development and ancient woodland.
- Fifteen times the diameter of its stem or 5m from the edge of its canopy, whichever is greater, around any ancient or veteran tree.

2.18 The use of semi-natural habitats for buffer zones as a means of protection is encouraged to contribute to the wider ecological network and enhance the green infrastructure area. Further guidance is provided on the compensation measures which may be applied should adverse impacts arise.

[5] https://ati.woodlandtrust.org.uk/

[6] https://www.gov.uk/government/publications/national-planning-policy-framework--2

[7] https://www.gov.uk/guidance/ancient-woodland-ancient-trees-and-veteran-trees-advice-for-making-planning-decisions

3 NATIONAL AND LOCAL PLANNING POLICY

National Planning Policy Framework (NPPF) February 2025[8]

3.1 In relation to this report, there are three paragraphs of the NPPF which should be considered. Paragraph 136 states: "Trees make an important contribution to the character and quality of urban environments and can also help mitigate and adapt to climate change. Planning policies and decisions should ensure that new streets are tree-lined, that opportunities are taken to incorporate trees elsewhere in developments (such as parks and community orchards), that appropriate measures are in place to secure the long-term maintenance of newly planted trees, and that existing trees are retained wherever possible."

3.2 Paragraph 187 (B & D) states: "Planning policies and decisions should contribute to and enhance the natural and local environment by:

b) recognising the intrinsic character and beauty of the countryside, and the wider benefits from natural capital and ecosystem services – including the economic and other benefits of the best and most versatile agricultural land, and of trees and woodland;

d) minimising impacts on and providing net gains for biodiversity, including by establishing coherent ecological networks that are more resilient to current and future pressures and incorporating features which support priority or threatened species such as swifts, bats and hedgehogs;"

3.3 And most importantly, paragraph 193 (A, C & D) states: "When determining planning applications, local planning authorities should apply the following principles:

a) if significant harm to biodiversity resulting from a development cannot be avoided (through locating on an alternative site with less harmful impacts), adequately mitigated, or, as a last resort, compensated for, then planning permission should be refused;

c) development resulting in the loss or deterioration of irreplaceable habitats (such as ancient woodland and ancient or veteran trees) should be refused, unless there are wholly exceptional reasons and a suitable compensation strategy exists; and

d) development whose primary objective is to conserve or enhance biodiversity should be supported; while opportunities to improve biodiversity in and around developments should be integrated as part of their design, especially where this can secure measurable net gains for biodiversity or enhance public access to nature where this is appropriate."

[8] https://www.gov.uk/government/publications/national-planning-policy-framework--2

4 SURVEY METHODOLOGY

4.1 The tree survey was completed by David Cox of Tetra Tech RPS and the report was written and authorised by David Cox of Tetra Tech RPS, a professional member of the Arboricultural Association and Chartered Landscape Architect of Tetra Tech RPS.

4.2 The tree survey was carried out in accordance with the requirements set out in BS 5837:2012 "Trees in Relation to Design, Demolition and Construction – Recommendations". The survey does not constitute a full arboricultural condition assessment involving the detailed inspection of trees in relation to their structural condition, decay, and any other physical and pathogenic defects.

4.3 During the survey, all information was digitally captured on site, using a tablet running Axciscape 4.07 software. This is a program specifically designed for arboricultural surveying, which allows trees to be located directly onto a digital copy of a sites topographical survey.

4.4 The tree survey involved a visual inspection from the ground of individual specimens and where deemed appropriate, trees have been assessed as groups of trees, woodland and hedgerows. Characteristics such as their amenity value, condition and dimensions have been recorded. A full breakdown of tree characteristics recorded during the survey can be seen in Appendix A.

4.5 Each arboricultural feature is marked on the Tree Constraints Plan at Appendix C with an identification number (T1, G1, H1, W1 etc), which can be seen at and cross referenced with the Tree Schedule at Appendix B. The Tree Schedule shows a breakdown of the raw data collected during the site visit.

4.6 The locations of the trees were based upon a topographic survey produced by Warner Surveys in December 2023, drawing ref. RT233/0109/00001.

4.7 Measurements for tree height, minimum crown clearance and crown spread were rounded to the nearest 0.5m. Stem diameter measurements were recorded to the nearest 10 mm using a diameter tape where access to the stem was possible.

4.8 Trees retention categories were assigned by the following criteria and have been differentiated on the Tree Plans using the following colours:

Category A: Trees of high quality with an estimated remaining life expectancy of at least 40 years.

Category B: Trees of moderate quality with an estimated remaining life expectancy of at least 20 years.

Category C: Trees of low quality with an estimated remaining life expectancy of at least 10 years, or young trees with a stem diameter below 150 mm.

Category U: Trees in such a condition that they cannot realistically be retained as living trees in the context of the current land use for longer than 10 years. However, it may be possible to retain some trees assigned to retention Category U, where public access to them is limited, as they may exhibit conservation value providing unique wildlife habitat.

4.9 Categories A, B and C have further sub-categories with regards to the reasons for tree retention:

1) Mainly arboricultural qualities.

2) Mainly landscape qualities.

3) Mainly cultural values, including conservation.

Root Protection Area

4.10 The protection of the roots and soil structure within the RPA should be treated as a priority. To avoid damage to the roots or rooting environment of retained trees, the RPA has been calculated in accordance with section 4.6 of BS5837:2012. They have been displayed on the Tree Plans with a magenta circle and may be modified in shape where deemed necessary by obvious root barriers observed on site (although the total area remains the same).

4.11 This methodology is recommended as the minimum area around a tree that contains sufficient roots and rooting volume to maintain viable tree vigour and structure. Where groups of trees, woodlands and hedgerows have been assessed, the RPA has been shown based on the average sized tree stem in each arboricultural feature, and so may fall short/exceed the RPA required for some of the individual specimens within the feature.

Limitations

4.12 The findings of the Tree Survey are not valid following adverse or unpredictable weather conditions or for any failure due to 'force majeure' or unpredictable events.

4.13 Trees are dynamic structures which are constantly growing and changing. Whilst reasonable effort has been made to identify defects which may compromise the trees longevity, no guarantee can be given as to the safety or otherwise of any individual tree or arboricultural feature. Due to the unpredictable laws and forces of nature, no tree can ever be deemed as safe. Natural failure of intact trees does occur, and changing climatic conditions can cause damage to even apparently healthy trees.

4.14 Trees were not climbed or inspected below ground level and inaccessible trees will have best estimates made about the location, physical dimensions and characteristics. If trees have been recorded beyond the extent of the site, all dimensions have been estimated (unless stated otherwise) and the assessment of these trees has occurred from land within the Client's ownership and publicly accessible land only (unless formal access has been arranged to these additional areas).

4.15 Trees and woody vegetation were not assessed for their potential impact upon future construction issues such as foundation designs (re: NHBC chapter 4.2)'[9]. Whilst this report may assist in assessing likely future impacts, it should not be classed as a comprehensive vegetation survey in relation to impact upon future designs.

4.16 The desktop study confirming statutory and non-statutory constraints uses publicly accessible third-party information, meaning the results of this exercise are only as accurate as the information available at the time of the assessment.

4.17 Provisional Tree Preservation Orders (TPOs) may be made whenever a LPA deems it appropriate, with only those persons interested in the land served with a copy of the Order. A further search for the presence of TPOs should be carried out prior to commencement of any tree works or removals specified within this report.

4.18 Where possible, the location of the arboricultural features identified at the site have been plotted using a topographical survey, which has been supplied by the client. If no topographical survey data has been provided, arboricultural feature locations have been plotted using GPS, aerial photography and/or OS maps, which have a reduced accuracy.

[9] NHBC. 'Chapter 4.2- Building Near Trees'. NHBC Standards 2016. 2016.

5 APPRAISAL AND RECOMMENDATIONS

Summary of Tree Survey

5.1 During the survey 70 trees were surveyed as individuals. The survey also recorded 6 Groups and 1 Hedge. For details on all the information recorded during the site visit, please refer to the Tree Schedule in Appendix B.

5.2 The BS5837:2012 quality of the Trees, Groups, Woodlands & Hedges recorded during the survey is broken down in Table 2 below.

Table 1: BS5837:2012 quality of Trees, Groups, Woodlands, Hedges and Scrub across the site

BS5837:2012 Category Breakdown of Surveyed Items					
Type	A	B	C	U	Total
Trees	8	34	26	2	70
Groups	0	5	1	0	6
Woodlands	0	0	0	0	0
Hedges	0	1	0	0	1
Grand Total	8	40	27	2	77
Distribution Percentage					100%

Planning considerations

5.3 Trees can offer many benefits, including the provision of visual amenity, softening or complementing the effect of the built environment, adding maturity to new developments and by making places more comfortable in tangible ways e.g. contributing screening and shade, reducing wind speed and turbulence, intercepting snow and rainfall, and reducing glare.

5.4 New tree planting opportunities should be considered as part of any potential redevelopment; this will help to broaden the age diversity of the tree cover within the area. Sufficient space should be provided for species with significant stature to grow out into maturity.

5.5 Under the UK planning system, local authorities have a statutory duty to consider the protection and planting of trees when granting planning permission for proposed development. The potential effect of development on trees, whether statutorily protected (e.g. by a tree preservation order or by their inclusion within a conservation area) or not, is still a material consideration that is considered when dealing with planning applications.

Design and Site Layout Considerations

5.6 During any future site planning exercises, the current and future growth potential of the trees should be considered.

5.7 The Root Protection Area (RPA) should become an exclusion zone during construction works and for any development. It should be fenced-off and protected in accordance with BS5837:2012. The canopy is likewise susceptible to damage during construction work and requires similar protection.

5.8 No activities that result in excavations, changes in level or soil compaction should take place within the RPA of any retained trees, especially older mature trees. This would include the storage of materials, any construction work, trafficking by vehicles or even excessive trafficking by pedestrians.

5.9 If some form of construction must take place within the RPA, then certain measures need to be adopted to avoid disturbance or damage to the roots and to maintain moisture infiltration and gaseous diffusion into the soil. It is recommended that these are detailed by a separate document called an Arboricultural Method Statement (AMS).

Services

5.10 The location and siting of new facilities near trees should consider the potential impact on and conflict with both tree roots and canopy. This should consider the ultimate size of existing young and middle-aged trees at maturity. Conversely the impact of the tree on the activities should also be considered regarding obstruction, shading, leaf fall and root action. These are problems that can be managed provided sufficient space is allowed for.

5.11 Services should be routed outside the existing or potential RPAs of trees. Where it is unavoidable, then the route of the services must be designed by an Engineer in consultation with an Arboriculturist. Further advice can be found in NJUG Volume 4- “Guidance for the planning, installation and maintenance of utility services in proximity of trees, 2007”.

Tree Risk Management

5.12 It is recommended that a programme of periodic arboricultural assessments be undertaken to regularly assess the full health and safety of all trees both in full leaf and bare stemmed. The assessments should prioritise areas with high footfall and/or presence of a constant target and accord with arboricultural advice, taking account of relevant factors (where known) that affect safety such as the age class, condition, size and species of the trees.

6 ARBORICULTURAL IMPACT ASSESSMENT

Brief Description of Proposed Development

6.1 This document supports the proposed site improvement works, including:

- the installation of upgraded footpaths and their associated lighting,
- additional security measures in the form of bollards, planters, new and replacement CCTV and new ANPR, with associated electrical cabinet;
- new smoking shelter, bike shelter and associated charging and a new bus drop/pick up point (including waiting shelter and pedestrian barriers) and associated works.

Reference Documents

6.2 To assess the impacts of the proposed site improvement works on the arboricultural features within the site, the proposed site plan was overlaid onto the TCP to create a Tree Removal and Protection Plan (TRPP). As well as identifying trees required to be retained and removed to facilitate the proposed development, the TRPP assessed potential conflicts between the arboricultural constraints (such as the RPA and tree crowns) and the proposed site plan. Mitigation measures to negate these conflicts (such as ground protection, tree protection fencing and pruning requirements) and to protect the trees during the construction process have been included on the TRPP, which can be found at Appendix D of this report.

6.3 The following documents have been referenced to create these plans:

- Topographical survey – produced by Warner Surveys in December 2023, drawing ref. RT233/0109/00001.
- Proposed site plan – AES0003560-0022-PLANNING

Proposed Tree Removal

6.4 To facilitate the proposed site improvement works, the removal of 2 small trees and 1 small tree group is required. The removals are shown on the Tree Removal and Protection Plan at Appendix D by a red transparent hatch. This is summarised in Table 5 below.

Table 2: Removal of Tree, Group, Woodland, Hedges and Scrub features required to facilitate the proposed development

Removals						Reference Numbers			
REMOVALS	A	B	C	U	Total	"A"	"B"	"C"	"U"
Trees			2	2	4			T66; T70	T27; T67
Groups		1			1		G3 (in part)		
Total	0	1	2	2	5				

7 ARBORICULTURAL METHOD STATEMENT

General

7.1 This Arboricultural Method Statement (AMS) has been prepared to support the ongoing health and vitality of trees to be retained through the proposed site improvement works through to completion of the site works of the site.

7.2 The methodologies, practices and recommendations contained within this AMS follow relevant guidance contained within BS5837:2012 Trees in Relation to Design, Demolition and Construction.

7.3 The governing Authority is Reading Borough Council who, where applicable, should be consulted on any matters that relate to trees on the site.

7.4 Any variation from the methodologies, practices and recommendations described within this AMS shall be discussed with the appointed supervising Arboricultural Consultant and approved with the governing Authority.

Restrictions Within Tree Protection Areas

- No mechanical excavation,
- No excavation by any other means without arboricultural supervision;
- No lowering of level for any purpose without arboricultural supervision,
- No storage of plant, equipment or material,
- No vehicular or plant access,
- No fire lighting,
- No handling, discharge or spillage of any chemical substance included cement washings.

Protection Measures – Pre-Construction Works

Reporting, Site Monitoring and Supervision

7.5 Should any arboricultural issues become apparent during the works the site manager should immediately contact the appointed project Arboricultural Consultant or the Council's Tree Officer for advice upon how to proceed.

7.6 On-site arboricultural supervision is available throughout the scheme over and above the agreed Arboricultural Site Supervision Methodology. Should it be deemed necessary the Site Manager and/or a representative from the Council's Tree Team can request arboricultural site supervision at any time during the works.

7.7 Supervision will require the appointed project Arboricultural Consultant to be present throughout the task. If in the case that the task is likely to take an extended amount of time, then photographic evidence at key stages may be acceptable and/or telephone contact between the Site Manager and Arboricultural Consultant.

Tree Removal and Facilitation Pruning

7.8 Selected pruning works to the crown of T14, T31, T43 and part of G3 will be required to facilitate working room for the footpath construction.

Table 6: Pruning Specification

Recommendation	Specification	Feature Number/s
Selective pruning	Remove the lowest branches of the crown to provide 3m of clearance above ground level to facilitate the correct positioning and erection of the Tree Protective Fencing as specified.	T18, T31, T43, G3 (part)

7.9 Additional requirements for tree work that are not detailed in this report shall be discussed with the appointed Arboricultural Consultant and/or a Tree Officer from the Council prior to its undertaking. No tree works outside of any planning permission granted can take place without prior permission from Reading Borough Council being granted.

7.10 Prior to beginning any tree work operations, the method of disposal, utilisation, or retention of arisings will be agreed upon. Unless other disposal options are impracticable or, as in the case of Ash Dieback, the material is infected by a disease or pest for which industry sanitation guidance is required, arising will not be burned.

7.11 Pruning should also be avoided during or immediately following a drought.

7.12 All works that require vegetation disturbance may also be subject to prior nesting bird assessments to prevent a breach of wildlife legislation (Wildlife and Countryside Act 1981, as amended). Where works are proposed between March and September, inclusive, a nesting bird check will be required (no longer than 48 hours prior to works) by a suitably qualified Ecologist) to determine if breeding birds are present, and if mitigation measures (to include buffer zones until young have fledged) are required.

7.13 All proposed tree works should be carried out in accordance with BS3998:2010 '*Tree Works Recommendations*'. It is recommended that a contractor approved by the Arboricultural Association[10] is appointed to carry out any trees works on-site.

Construction Exclusion Zone

7.14 The Construction Exclusion Zone (CEZ) is defined by the protection fence line as shown on the Tree Removal and Protection Plan (Appendix D).

7.15 The tree protection fence shall be erected prior to construction works commencing on site and shall remain in place until after all construction activities have been completed and then only with the prior approval of the arboricultural consultant.

[10] www.trees.org.uk

7.16 This CEZ shall not be disturbed, and the protective fencing shall not be moved or taken down at any time unless to replace first phase protective measures with a second phase. Any required changes to the CEZ that deviate from the approved plans shall be agreed with the appointed project Arboricultural Consultant and/or the Local Authority Tree Officer.

7.17 Within the CEZ there must be **no** mechanical digging or scraping, **no** alteration to existing ground levels including soil stripping, **no** earthworks, **no** handling or discharge of any chemical substance, concrete washings or of any fuels.

7.18 Vehicular or pedestrian access and the storage of any materials is prohibited within the CEZ.

7.19 **No** materials that may contaminate the soil such as concrete mixings, diesel oil and vehicle washings shall be discharged within 10m of the stem of any tree and **no** fires shall be lit within 10m of the maximum extent of a trees crown.

Tree Protection Fencing

7.20 The tree protection fence shall be erected as shown in the Tree Removal and Protection Plan (Appendix D).

7.21 The fence line shown is the minimum required, and the length of the fence shall be extended or adjusted on site as agreed with the appointed project Arboricultural Consultant to ensure satisfactory protection of all retained trees and RPAs.

7.22 One phase of protective fencing has been proposed and illustrated on the Tree Protection Plan.

7.23 Unless otherwise agreed in writing with the appointed project Arboricultural Consultant and/or LPA Tree Officer, the fencing system to be utilised shall be in accordance with Appendix E and compliant with BS5837:2012.

7.24 For example, 2m tall, welded mesh panels on rubber or concrete feet. In such cases, the fence panels should be joined together using the minimum of 2 anti-tamper couplers, installed so that they can only be removed from inside the fence. The distance between the fence couplers should be a minimum of 1m and uniform throughout the fence. The panels should be supported on the inner side by stabiliser struts, which should be attached to a base plate and secured by ground pins (Appendix E).

7.25 Where site circumstances and associated risk of damaging incursion into the RPA do not necessitate the default fencing specification (Appendix E), where agreed with the Arboricultural Consultant and/or LPA Tree Officer, an alternative fencing specification may be used.

7.26 For example, 1m high heavy duty hi-vis barrier to act as a visual tree protection barrier fort contractors to be aware of the RPAs in this area. This will be erected and fitted to metal poles, timber stakes or railway pins driven into the ground at regular intervals.

7.27 Once the protective barriers are in place, they must remain in situ throughout the course of the development until the completion of construction, other than to facilitate agreed tree removal.

7.28 Copies of the Tree Removal and Protection Plan (Appendix D) shall be placed in the site office for reference by all site staff.

7.29 Signs detailing the purpose of the protective barrier shall be attached to the barriers at 10m intervals. Signs must be replaced as necessary should they be removed or become illegible.

7.30 Following erection of the protective barriers and prior to commencement of the development it is recommended that an inspection of the site, by either the Council's Tree Officer or the Arboricultural Consultant, is arranged to confirm fencing has been installed in accordance with the Tree Removal and

Protection Plan and any relevant conditions that may be attached to a grant of planning consent for the development have been met.

Site Compounds and Materials Stores

7.31 Activities related to the establishment of a temporary site compound have the potential to impact upon retained trees by various means. The storage and mixing of chemicals and materials such as concrete can have a damaging effect on tree health if precautions are not taken.

7.32 To prevent harm occurring to trees provision for materials storage, deliveries and other related activities shall be located outside of the RPAs of all arboricultural features to be retained.

Protection Measures – During Construction Works

Ground Protection

7.33 Ground protection must be fit for purpose – to prevent damage from compaction and/or direct surface root damage to the underlying roots and soil within RPAs.

7.34 Where access into the RPA is required, the tree protective fencing can be set back, and ground protection measures installed for access for construction working room.

7.35 Temporary ground protection shall be sufficient in design to support the proposed construction movement within the RPA. Different level of ground protection may compromise one of the following designs as referenced from BS5837:2012;

a) Pedestrian movements only – a single thickness of scaffold boards placed either on top of a driven scaffold frame, so as to form a suspended walkway, or on top of a compression-resistant layer (e.g. 100mm depth of woodchip), laid onto a geotextile membrane;

b) For pedestrian-operated plant up to a gross weight of 2t, proprietary, inter-linked ground protection boards placed on top of a compression-resistant layer (e.g. 150mm depth of woodchip), laid onto a geotextile membrane;

c) For wheeled or tracked construction traffic exceeding 2t gross weight, an alternative system (e.g. proprietary system or pre-cast reinforced concrete slabs) to an engineering specification designed in conjunction with arboricultural advice, to accommodate the likely loading to which it will be subjected.

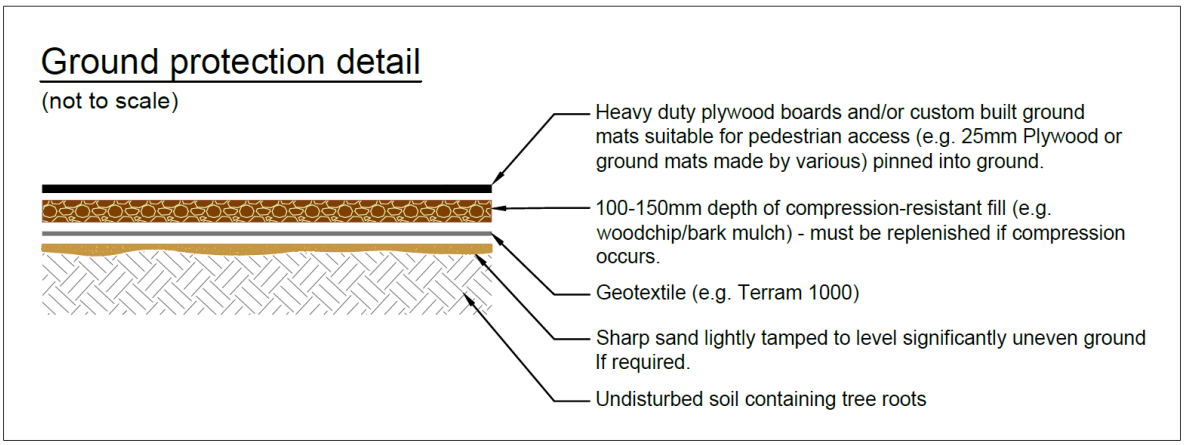

Excavation within the RPA

7.36 The area of the proposed improvement works where supervision of works within the RPA(s) is required are annotated on the Tree Removal and Protection Plan included at Appendix D. The project Arboricultural Consultant will be present to ensure that no unnecessary damage occurs to the roots or rooting volume of the retained trees.

7.37 A schedule of arboricultural supervision will be agreed with the site manager to ensure all works within the RPA are supervised by an Arboriculturist.

7.38 Only hand tools, including powered hand tools, will be used when working within the RPA(s), to minimise accidental root damage and care shall be taken when excavating to avoid accidental root bark damage.

7.39 The excavation will be carried out with small mechanical plant, less than 2 tonnes. The excavation will also be carried out in a retreating fashion, working away from the trees, ensuring machinery is situated at the peripheries of the RPAs only.

7.40 During these works, it is possible that some roots will be cut. A decision on the cutting or severance of any roots discovered or identified during these works will be made by the supervising Arboriculturist. Roots over 25mm in diameter shall be cut only if agreed with the supervising Arboriculturist. Individual roots and clumps of roots less than 25mm in diameter shall be cut cleanly with a sharp hand tool such as secateurs or a hand saw. The freshly pruned roots should be wrapped in hessian and kept damp until the area can be backfilled. Roots will never be left exposed or allowed to dry out. Where flexible roots are encountered, where possible, they shall be diverted around the edge of the excavation pit to avoid the need to be cut.

7.41 Once all works within RPAs have been completed a report documenting the works shall be produced and issued to the client and LPA.

Installation of Bollards within the RPA

7.42 A number of proposed bollards associated with the proposed improvement works, fall within the RPA(s) of trees to be retained.

7.43 The proposed excavation will be completed with hand tools only, including powered hand tools when working within the RPA(s). This will minimise accidental root damage and care shall be taken when excavating to avoid accidental root bark damage.

7.44 Where feasible, when the excavation encounters roots, the position of the bollards will be slightly adjusted to avoid the need for root severance.

7.45 However, in instances where relocation of the bollards is not possible, it is likely that some roots will be cut. A decision on the cutting or severance of any roots discovered or identified during these works will be made by the project Arboriculturist. Roots over 25mm in diameter shall be cut only if agreed with the supervising Arboriculturist. Individual roots and clumps of roots less than 25mm in diameter shall be cut cleanly with a sharp hand tool such as secateurs or a hand saw. The freshly pruned roots should be wrapped in hessian and kept damp until the area can be backfilled. Roots will never be left exposed or allowed to dry out. Where flexible roots are encountered, where possible, they shall be diverted around the edge of the excavation pit to avoid the need to be cut.

7.46 The excavated hole to receive the bollard shall be lined with a non-permeable membrane prior to the pouring of any concrete footings if required.

Installation of New Footpaths within RPAs

7.47 Where proposed footpaths pass through trees RPAs, construction should be undertaken using a "No dig" methodology. The Tree Removal and Protection Plan (Appendix D) shows the minimum extent of "No dig" surfacing required, to limit impact to the tree's rooting system, with a Yellow "cross" hatch. This is based on the BS5837(2012) derived RPAs.

7.48 This will also act as ground protection for the parts of the RPAs that are outside the protective barriers and will need to be installed before any other construction activity occurs on site.

7.49 The use of cellular confinement system is suggested in BS5837(2012) as one appropriate way to achieve hard surfacing over tree roots, and the following guidance is based on this principle as well as Arboricultural Association Guidance Note 12 – Cellular Confinement Systems[11]. However, before implementation, the following specifications and guidance will need to be reviewed by an engineering specialist to ensure that the final construction is appropriate from an engineering viewpoint and suitable for the purpose intended.

Installation

7.50 Any required changes in topography will be accomplished by raising levels rather than lowering, reducing the likelihood of significant root disturbance. To attain a flat surface, it may be necessary to remove the top layer of vegetation by no more than 50mm. If any additional excavation of ground level is required, it shall be assessed by the project Arboricultural Consultant and possibly the Councils' Tree Officer.

7.51 In the unlikely event that roots are encountered, those smaller than 25mm diameter may be pruned back using a sharp and clean cutting tool such as secateurs or handsaws. Roots larger than 25mm should only be cut having first consulted the project Arborist and/or the Local Tree Officer as the roots may be essential to the tree's health and stability.

Sub-base and final wearing courses

7.52 Once a level surface has been formed, the cellular load spreading confinement system can be installed on top of a geotextile membrane that has been laid on top of the ground surface. The infill shall be crushed stone (typically 20-40mm, clean angular stone), with no fines. This is to ensure that moisture is allowed to penetrate the surface as well as to facilitate gaseous exchange.

7.53 During the construction phase a temporary wearing course of tarmac and or aggregate, separated by a geotextile membrane is likely to be the most appropriate way of providing a suitable ground protection/working surface. At the final stages of the project, the temporary wearing course shall be removed, and the final surfacing will be installed.

7.54 Suitable wearing courses include bonded gravel, paving slabs, washed gravel or block pavers set on a sand base, this is not an exhaustive list, other surfacing may be suitable but consultation with the project arboriculturist is recommended before implementation.

Edge retention

7.55 The use of non-invasive ground contact structures including proprietary edging, gabions, wooden boards or railway sleepers is suggested in BS 5837(2012) as effective edge supports in RPAs secured by metal rods, track or road pins or wooden pegs. This or a similar approach shall be used to minimise

[11] https://www.trees.org.uk/Trees.org.uk/media/Trees-org.uk/Misc%20images/Bookshop/AA_GuidanceNote12_CellularConfinementSystems-Web.pdf

any adverse risk of impact on trees. No trench type foundation shall be used without prior consultation with the project arboriculturist and/or the Local Authority Tree Officer.

Detailed specifications

7.56 Final drawings shall be prepared by the project engineer and based on manufacturers specifications for special surfacing. These plans could be secured by way of a suitably worded planning condition and approved by the Council before any construction activity occurs on-site.

Dust Management

7.57 On particularly hot, dry weather conditions the dust created from the demolition of built structures can cover tree canopies and subsequently cause indirect damage to trees by reducing transpiration through the leaves and their ability to photosynthesise.

7.58 Water suppression systems will be installed either on the ground or upon the scaffold structures to control dust release at the source to avoid dust settling on leaves.

Soil Compaction and Remediation Measures

7.59 Every reasonable measure shall be taken to ensure that the soil within and around the RPA's is not compacted. If, however, any incidence of compaction does occur within the vicinity of trees then it shall be reported to the appointed project Arboricultural Consultant to review the appropriate remediation measures to be taken.

7.60 Dependent on the level of compaction certain remediation measures may be undertaken, such as:

- The introduction of well composted wood mulch to the compacted area to encourage the reintroduction of organic matter into the soil sub-base and improve soil structure.
- Sub-soil aeration using compressed air.
- The rotavating of soil or the use of any other machinery to break-up any compacted soil shall not occur within the vicinity of RPA's.

7.61 To mediate for light levels of soil compaction, organic matter such as well matured woodchip or specialist blends of biochar with compost can be spread evenly around the area of compaction using hand tools to improve the soil structure across the top 100-200mm of soil.

7.62 If compaction is more significant, compressed air delivered by a compressor with a moisture trap may be required to break up the top 300-400mm of soil. The air lance is carefully inserted at shallow angles into the soil with the compressed air delivered in pulses to fracture the soil without severing any roots. Organic matter or biochar can then be spread across the surface, with the compressed air used to blow the chosen material into the soil horizons.

7.63 During dry periods, irrigation can be required for up to 12 weeks with immediate watering required if soils are dry.

7.64 Temporary fencing will be erected around the remediated area to prevent any changes of re-compaction from footfall.

Protection Measures – Post-Construction Works

Removal of Tree Protection Fencing

7.65 Protective barriers will be removed once all external main construction works have been completed to allow the completion of hard and soft landscaping. Barriers shall be removed carefully to ensure no damage to retained trees occurs.

Hard and Soft Landscaping

7.66 Hard landscaping works that have the potential to cause physical damage to retained trees, compaction of the soil or severance of tree roots shall not occur within the CEZ, unless under supervision of the Project Arboriculturist. Any hard landscaping works taking place within the RPAs should be completed in accordance with this AMS following advice from the Project Arboriculturist.

7.67 No unsupervised works or storage of hard landscaping construction materials shall occur within the CEZ.

7.68 Minor surface reconfigurations including installation of boundary fencing and seeding/turfing are unlikely to have a negative effect on retained trees. However, to ensure foreseeable damage does not occur, hand-dig only methods will be adopted when working with the RPA of retained trees. No heavy machinery to cultivate the ground will be used in the RPAs.

7.69 Care will be taken to ensure the ground level within the RPAs is not altered by landscaping activities. Backfilling should not raise the ground level, nor should raise soil levels encounter the stem of retained trees that have previously been exposed to air.

7.70 The guidance of the BS8545:2014 will be followed in relation to the aftercare of the trees to be planted. This will include amongst general irrigation and formative pruning:

- A formal assessment of young tree health and development should be carried out annually.
- This assessment should include foliar appearance (i.e., lack of leaf chlorosis and/or necrosis), leaf size and leaf canopy density, extension growth and incremental girth development.
- Continual assessment on an ad hoc basis should be carried out throughout the year, to inform maintenance requirements.

Handover & Close Out

7.71 A tree safety assessment will be required prior to handing over the site to the client for final site use to ensure all retained trees are in good condition and any potential hazards are mitigated sufficiently. All retained trees should positively contribute to the new development and should be included as part of a management plan to ensure the long-term safety of site users.

7.72 This BS5837:2012 survey is not a full or thorough assessment of the health and safety of the trees on or adjacent to the site; and therefore, it is recommended that detailed tree inspections are undertaken on a regular basis with the express purpose of complying with the landowner's duty of care to satisfy health and safety requirements.

8 PHASING SCHEDULE (DRAFT)

Phase	Recommendation	Start Date
Phase One – Pre Construction	Monitoring site visits by Project Arboriculturist to ensure continued compliance of protection measures Monitoring site visits by Project Arboriculturist to ensure tree removal methodology is in accordance with the approved AMS.	(TBC)
Phase Two – During Construction	Monitoring of installation of bollards and utilities trenches within the RPA of retained trees.	(TBC)
Phase Three – Post Construction / Completion	Handover and Closeout	(TBC)

Phase One – Pre-Commencement

8.1 This section outlines control measures which must be implemented during the site preparation phase of development, in accordance with BS 5837:2012.

Key Contacts

8.2 All operations detailed within this AMS will be monitored by the site's Principal Contractor/Project Manager (this is not a RPS employee). The Principal Contractor/Project Manager will ensure that specifications within this document are adhered to and that the Project Arboriculturist will be contacted for advice in relation to works near to retained trees. The Project Arboriculturist for the site is:

Project Arboriculturist – David Cox M.Arbor.A CMLI

Responsibilities

8.3 It is the responsibility of the Principal Contractor/Project Manager to ensure that the planning conditions are always adhered to and that a monitoring regime regarding tree protection is adopted on site.

8.4 The Principal Contractor/Project Manager will ensure the build sequence is appropriate to ensure that no damage occurs to retained trees during the construction processes. Protective measures (fencing and ground protection) will remain in place until completion of the construction phase of development and will only be removed to allow the commencement of soft landscaping works.

8.5 The protection measures and signs will always be maintained in position and checked daily by a designated person on site under the responsibility of the Principal Contractor/Project Manager.

8.6 The Principal Contractor/Project Manager will be responsible for contacting the Local Planning Authority should any issues are raised related to the trees on site.

8.7 If pruning works to trees beyond the agreed scope within this Method Statement are required at any time, then permission must be sought from the Local Planning Authority prior to commencement. All tree pruning and tree surgery must be carried out in accordance with BS3998.

8.8 The Principal Contractor/Project Manager will be responsible for ensuring sub-contractors do not carry out any process or operation that is likely to adversely impact upon any retained tree. If any issues arise in relation to the retained trees the Project Arboriculturist will be contacted for advice.

Tree Protection Fencing

8.9 In accordance with BS 5837:2012, tree protection fencing (TPF) will be installed within the site during the site preparation phase. The location of the TPF is plotted on the Tree Removal and Protection Plan in Appendix D of this report.

Pre-Commencement Site Meeting

8.10 A pre-construction meeting will take place between the Construction Manager and Project Arboriculturist to discuss the programme of works and the timing and implementation of control measures throughout the construction phase.

8.11 The key requirements of the AMS will be explained during all site inductions. Trees and tree groups that are to be retained and protected will be identified before works commence. A copy of the AMS and TRPP will be retained in the site offices for reference.

Phase Two – Construction

Continued Monitoring

8.12 An inspection audit will be completed by the Project Arboriculturist once the protective measures have been installed and prior to construction works commencing to ensure they provide the level of protection required for retained trees. Feedback will be provided to the local planning authority on completion of this visit if necessary.

- **Initial inspection (DATE TBC)** by the appointed project Arboricultural consultant of the installed tree protection measures in relation to retained trees.
    - Site will be subject to ad-hoc site inspections by the governing Authority if they wish to attend site.
    - The process of tree removals will also be subject to ad-hoc inspections to ensure they comply with the trees specified within this document and to ensure the trees to be retained do not undergo any foreseeable indirect damage.
- **Interim inspection(s) (DATE TBC)** to oversee the installation of utilities within the RPA of T39.
    - It shall oversee the installation of the utilities which form part of the proposed development through the trees ref T39.

- **Final inspection, (DATE TBC) (Sign Off)** Completion of the construction and sign off from appointed project Arboricultural Consultant that tree protective measures have been completed successfully and that the site has been left in good condition.

Phase Three – Post-Construction

Handover & Close Out Notes

8.13 A tree safety assessment is recommended prior to handing over the site to the client for final site use to ensure all retained trees are in good condition and any potential hazards are mitigated sufficiently. All retained trees should positively contribute to the finished development and should be included as part of a management plan to ensure the long-term safety of site users.

8.14 The BS5837:2012 survey is not a full or thorough assessment of the health and safety of the trees on or adjacent to the site; and therefore, it is recommended that detailed tree inspections are undertaken on a regular basis with the express purpose of complying with the landowner's duty of care to satisfy health and safety requirements.

Appendices

Appendix A

Tree Characteristics Recorded During Survey

Tree Ref No:	Sequential reference number of trees or groups of trees. Avenues, woodlands and hedgerows were also recorded on the tree constraints plan. # - denotes inaccessible trees (best estimates are made about the location, physical dimensions and characteristics.)
Species	Species listed by common name, with scientific names (italic lettering).
Height (m)	Estimated height of canopy to nearest metre.
Branch Spread	branch spread, taken as a minimum at the four cardinal points, to derive an accurate representation of the crown
Stem diameter @ 1.5 m (m)	Estimated diameter of trunk at 1.5 m above ground level in metres unless otherwise indicated, multi-stemmed trees being measured in accordance with Annex C: BS5837:2012
Existing height above ground level	To inform on ground clearance, crown/stem ratio and shading the estimated height of the first significant branch and direction of growth and canopy above ground level.
Stem No.	Number of stems (if necessary) of individual tree.
Life Stage	Expressed as:- Y (Young) SM (Semi-mature) EM (Early mature) M (Mature) OM (Over-mature) V (Veteran) D (Dead)
Physical Condition	Apparent condition expressed as the following categories, based upon a brief visual inspection from the ground only:- Good Fair Poor Dead
Comments / Management Recommendations	General observations, particularly of structural and/or physiological condition (e.g. the presence of any decay and physical defect), and/or preliminary management recommendations and potential for wildlife habitats (not exhaustive).
Estimated remaining contribution (years)	Estimated remaining contribution, in years (<10, 10+,20+,40+)

Tree Quality Assessment Value: Category	Criteria grading with regards to Table 1: BS 5837:2012, expressed as:-	**A** (Trees/Vegetation of high quality and value) **B** (Vegetation of moderate quality and value) **C** (Trees/Vegetation of low quality and value) **U*** (Those in such a condition that they cannot realistically be retained as living trees in the context of the current land use for longer than 10 years)
	* Category U trees can have existing or potential conservation value which might be desirable to preserve.	
Tree Quality Assessment Value: Sub - Category	Criteria grading with regards to Table 1: BS 5837:2012, expressed as:-	**1** (Trees with mainly *arboricultural* value) **2** (Trees with mainly *landscape* value) **3** (Trees with mainly *cultural / conservation* value)

Appendix B

Tree Survey Schedule

Tree Survey Schedule

Site 250 Brook Drive, Green Park, Reading
Project schedule ref: 794-PLN-LAN-5156_750
Drawing reference: 794-PLN-LAN-5156_700
Survey date: 01/05/2024

Surveyor: D. Cox
Status:
Revision: .
Notes:

Ref. no.	Species	Height (m)	Crown spread (m) N	E	S	W	Stem dia. (m)	Stem no. at 1.5m	Height of crown clearance (m)	Dir/ height	Age class	Condition	Type	General observations Management recommendations	Estimated remaining contribution (years)	Tree Quality Category (BS5837)
T1	Salix fragilis Crack Willow	6.0	6.0	5.0	4.0	3.0	0.25	1.00	2.20	-	Y	Good	Fair/Good	Set on edge of car park, lacks some vigour.	+ 20	C2
T2#	Salix fragilis Crack Willow	6.0	2.0	2.0	2.0	2.0	0.18	1.00	2.00	-	Y	Fair	Fair	Set on edge of car park, lacks some vigour.	+ 10	C2
T3	Acer campestre Field Maple	7.0	4.0	4.0	5.0	5.0	0.15 0.15 0.02x2	4.00	1.50	-	EM	Good	Good	Set on edge of car park, multi-stem from ground level.	+ 30	B2
T4	Acer campestre Field Maple	7.0	5.0	5.0	5.0	4.0	Ave 0.08	8.00	1.50	-	EM	Good	Good	Set on edge of car park, multi-stem from ground level.	+ 30	B2
T5	Acer campestre Field Maple	5.0	3.0	3.0	2.0	3.0	0.15	1.00	1.80	-	Y	Good	Fair	Set in narrow car park island.	+ 10	C2
T6	Salix fragilis Crack Willow	7.0	3.0	3.0	2.0	3.0	0.15	1.00	2.00	-	Y	Good	Good	Set on edge of car park. Bias to north.	+ 20	C2
T7	Salix fragilis (var) Crack Willow	Ave 15	see plan				Ave 0.5	1.00	2.50	N	M	Good	Good	Linear Willow group beside lake, set on lower land than car park. Few lower branches, minor snags and wounds.	+ 30	A2/3
T8#	Salix fragilis (var) Crack Willow	18.0	7.0	8.0	7.0	7.0	Ave 0.4	5.00	2.00	N	M	Good/Fair	Good	Larger, lakeside multi-stem Willow. Ivy clad. Few stubs/snags.	+ 30	A2/3
T9	Acer campestre Field Maple	4.0	2.0	2.0	2.0	2.0	0.12	1.00	2.00	-	Y	Good	Good	Young car park planting.	+ 10	C2
T10	Acer campestre Field Maple	4.0	2.0	2.0	3.0	2.0	0.07 x3	3.00	1.50	-	Y	Good	Good	Young car park planting.	+ 10	C2
T11	Salix fragilis Crack Willow	9.0	6.0	3.0	3.0	3.0	0.25	1.00	1.50	-	EM	Good	Good	Slight bias to north.	+ 10	C2
T12	Salix fragilis Crack Willow	Ave 15	see plan				0.25	1.00	2.00	N	EM	Good	Fair/Good	Part of linear Willow group, poorer size/scale than others.	+ 20	B2/3

Note: This survey is based on a brief visual inspection from the ground.
It is not intended as a full arboricultural inspection.
- Indicates estimated tree. * - Indicates off site tree.

Tree Survey Schedule

Site 250 Brook Drive, Green Park, Reading
Project schedule ref: 794-PLN-LAN-5156_750
Drawing reference: 794-PLN-LAN-5156_700
Survey date: 01/05/2024

Surveyor: D. Cox
Status:
Revision: .
Notes:

Ref. no.	Species	Height (m)	Crown spread (m) N	E	S	W	Stem dia. (m)	Stem no. at 1.5m	Height of crown clearance (m)	Dir/ height	Age class	Condition	Type	General observations Management recommendations	Estimated remaining contribution (years)	Tree Quality Category (BS5837)
T13	Acer campestre Field Maple	4.0	3.0	3.0	3.0	3.0	0.15	1.00	0.50	-	Y	Good	Good	Car park tree, set in shrubbery.	+ 20	B2/3
T14	Populus tremula Aspen	12.0	7.0	5.0	5.0	5.0	0.25	1.00	2.00	-	Y	Good	Good	Maiden Aspen, some lower dead wood snags.	+ 30	B2
T15	Populus tremula Aspen	13.0	6.0	3.0	4.0	4.0	0.25	1.00	3.00	-	Y	Good	Good/Fair	Maiden Aspen, some lower dead wood snags.	+ 30	B2
T16	2 Acer campestre Field Maple	8.0	5.0	4.0	5.0	4.0	Ave 0.1	5.00	1.80	N	Y	Good	Good	Low canopy, pair of close multi-stem Maple.	+ 30	C2
T17	Salix fragilis Crack Willow	9.0	9.0	6.0	1.0	4.0	Ave 0.2	3.00	2.00	N	EM	Fair	Good	Tri-stem, bias to north. Ivy clad.	+ 20	C2
T18	Acer campestre Field Maple	9.0	6.0	5.0	3.0	3.0	0.15 x2	2.00	2.00	N	EM	Good	Good	Twin stem, adjoining building.	+ 30	B2
T19	Acer campestre Field Maple	8.0	4.0	5.0	3.0	3.0	0.12 x4	4.00	2.00	E	EM	Good	Good	Four stem from ground level.	+ 30	B2
T20	Acer saccharum Sugar Maple	4.0	2.0	2.0	2.0	2.0	0.06 x5	5.00	1.00	-	Y	Good	Good	Young multi-stem.	+ 10	C2
T21	Salix caprea Goat Willow	6.0	5.0	1.0	1.0	3.0	0.12 x3	3.00	2.50	N	Y	Fair/Good	Fair	Suppressed, biased.	+ 10	C3
T22	Acer campestre Field Maple	6.0	2.0	2.0	2.0	1.0	0.1 0.1	2.00	1.00	-	Y	Good	Good	Set in thicket, some ivy.	+ 10	C2
T23	Salix fragilis Crack Willow	10.0	8.0	4.0	1.0	7.0	Ave 0.15	+10	1.50	N	EM	Fair	Fair	Wide multi-stem, bias to north. Some dead wood. Coppice opportunity	+ 20	C3
T24	Populus tremula Aspen	15.0	3.0	7.0	8.0	10.0	0.40	1.00	+3	S	EM	Good	Good	Bias to south.	+ 30	B2

Note: This survey is based on a brief visual inspection from the ground.
It is not intended as a full arboricultural inspection.
- Indicates estimated tree. * - Indicates off site tree.

Tree Survey Schedule

Site 250 Brook Drive, Green Park, Reading
Project schedule ref: 794-PLN-LAN-5156_750
Drawing reference: 794-PLN-LAN-5156_700
Survey date: 01/05/2024

Surveyor: D. Cox
Status:
Revision: .
Notes:

Ref. no.	Species	Height (m)	Crown spread (m) N	E	S	W	Stem dia. (m)	Stem no. at 1.5m	Height of crown clearance (m)	Dir/ height	Age class	Condition	Type	General observations Management recommendations	Estimated remaining contribution (years)	Tree Quality Category (BS5837)
T24	Populus tremula Aspen	17.0	4.0	3.0	3.0	3.0	0.35	1.00	+3	-	EM	Good	Good	Upright form, yet to flush. High surface roots.	+ 30	B2
T26	Populus tremula Aspen	19.0	8.0	6.0	6.0	6.0	0.45	1.00	2.50	N	EM	Good	Good	Upright form, yet to flush. High surface roots.	+ 30	B2
T27#	Populus tremula Aspen	8.0	1.0	1.0	1.0	1.0	0.15	1.00	-	-	-	-	-	Dead, fell.	-	U
T28	Betula pendula (var) Silver Birch	Ave 12	see plan				Ave 0.25	1.00	2.00	-	EM	Good	Good	Series of Birch, with some potential.	+ 30	B2
T29	Betula pendula (var) Silver Birch	Ave 10	see plan				<0.15	1.00	<2	-	Y	Good	Good	Series of Birch, some located by-eye. Immature or unremarkable, some suppressed.	+ 20	C2
T30	3 Betula nigra River Birch	7.0	3.0	3.0	3.0	3.0	Ave 0.25	1.00	2.00	-	EM	Good	Good	Trio of River Birch.	+ 30	B1/2
T31	Salix caprea Goat Willow	6.0	2.0	4.0	4.0	4.0	0.15 0.2	2.00	2.00	N	EM	Good	Good	Twin stem Willow. Set in shrub.	+ 20	C2
T32	Populus tremula Aspen	+22	9.0	9.0	8.0	8.0	0.50	1.00	3.00	W	M	Good/Fair	Good	Fine, lakeside Poplar, storm snag to south, 0.15Ø.	+ 30	A2
T33	Populus tremula Aspen	+20	8.0	6.0	3.0	8.0	0.40	1.00	2.50	W	M	Good	Good	Slight northerly bias.	+ 30	A2
T34	Populus tremula Aspen	+18	4.0	4.0	4.0	4.0	0.30	1.00	+5	-	Y	Good	Good	Upright form.	+ 20	B2
T35	Populus alba White Poplar	+18	10.0	15.0	8.0	4.0	0.60	1.00	2.00	E	M	Good	Good	Fine tree, part of wider Poplar group. Bias to east.	+ 30	A2
T36	Populus alba White Poplar	+22	6.0	8.0	11.0	8.0	0.65	1.00	2.00	S	M	Good	Good	Fine tree, part of wider Poplar group. Bias to east.	+ 30	A2

Note: This survey is based on a brief visual inspection from the ground.
It is not intended as a full arboricultural inspection.
- Indicates estimated tree. * - Indicates off site tree.

Tree Survey Schedule

Site 250 Brook Drive, Green Park, Reading
Project schedule ref: 794-PLN-LAN-5156_750
Drawing reference: 794-PLN-LAN-5156_700
Survey date: 01/05/2024

Surveyor: D. Cox
Status:
Revision: .
Notes:

Ref. no.	Species	Height (m)	Crown spread (m) N	E	S	W	Stem dia. (m)	Stem no. at 1.5m	Height of crown clearance (m)	Dir/ height	Age class	Condition	Type	General observations Management recommendations	Estimated remaining contribution (years)	Tree Quality Category (BS5837)
T37	Populus alba White Poplar	+18	6.0	6.0	2.0	5.0	0.40	1.00	2.00	N	EM	Good	Good	Bias to north, part of wider Poplar group.	+ 30	B2
T38	Populus alba White Poplar	20	9.0	6.0	6.0	8.0	0.55	1.00	+4	-	M	Good	Good	Fine tree, part of wider Poplar group. Bias to east.	+ 30	A2
T39	4 Populus alba White Poplar	+20	9.0	12.0	8.0	8.0	Ave 0.6	1.00	2.00	E	M	Good	Good	Fine tree, part of wider Poplar group. Bias to east. Canopy slight bias to east.	+ 30	A2
T40	Liquidambar styraciflua Sweet Gum	8.0	3.0	3.0	3.0	3.0	0.25	1.00	2.00	-	Y	Good	Good	Set in new tree seat, suppressed by Poplar.	+ 20	B1
T41	Acer campestre Field Maple	6.0	3.0	5.0	3.0	4.0	0.25	1.00	2.00	-	EM	Good	Good	Low canopy, wide form.	+ 20	B2
T42	Acer saccharum Sugar Maple	9.0	4.0	4.0	4.0	4.0	Ave 0.1	8.00	2.00	-	EM	Good	Good	Multi-stem, good potential.	+ 30	B1/2
T43	2 Acer saccharum Sugar Maple	6.0	2.0	2.0	2.0	2.0	0.15	1.00	2.00	-	Y	Good	Good	Immature plantings.	+ 20	C2
T44	Acer campestre Field Maple	6.0	4.0	4.0	4.0	4.0	0.35	1.00	2.00	-	EM	Good	Good	Crown lifted in past.	+ 30	B2
T45	Acer campestre Field Maple	5.0	4.0	4.0	4.0	4.0	0.18 x2	2.00	1.00	-	EM	Good	Good	Twin stem from 0.3m. Low canopy.	+ 30	B2
T46	2 Acer campestre Field Maple	6.0	4.0	4.0	4.0	4.0	0.15 x4	4.00	1.80	-	EM	Good	Good	Pair of low canopy Maple, multi-stem.	+ 30	B2
T47	Acer saccharum (var) Sugar Maple	10.0	Ave 3	Ave 3	Ave 3	Ave 3	Ave 0.2	1.00	2.00	-	Y	Good	Good	Linear Maple group, set between raised car park decks. Some potential.	+ 30	B2
T48	2 Acer campestre Field Maple	7.0	4.0	3.0	3.0	3.0	Ave 0.15	+10	1.00	E	EM	Good	Good	Multi-stem Maple, adjoining car park. Set on edge of sloping group.	+ 30	B2

Note: This survey is based on a brief visual inspection from the ground.
It is not intended as a full arboricultural inspection.
- Indicates estimated tree. * - Indicates off site tree.

Tree Survey Schedule

Site 250 Brook Drive, Green Park, Reading
Project schedule ref: 794-PLN-LAN-5156_750
Drawing reference: 794-PLN-LAN-5156_700
Survey date: 01/05/2024

Surveyor: D. Cox
Status:
Revision: .
Notes:

Ref. no.	Species	Height (m)	Crown spread (m) N	E	S	W	Stem dia. (m)	Stem no. at 1.5m	Height of crown clearance (m)	Dir/ height	Age class	Condition	Type	General observations Management recommendations	Estimated remaining contribution (years)	Tree Quality Category (BS5837)
T49#	Tilia x euchlora Crimean lime	10.0	6.0	6.0	5.0	6.0	0.40	1.00	1.50	W	EM	Good	Fair/Good	Maiden, lacks some vigour. Included fork.	+ 30	B2
T50	Tilia x euchlora Crimean lime	6.0	3.0	4.0	4.0	4.0	0.25	1.00	0.50	W	Y	Good	Good	Low canopy.	+ 30	B2
T51	Prunus avium Wild Cherry	6.0	4.0	4	4	3	0.30	1.00	2.00	W	EM	Good	Good	Suppressed. Some dead wood.	+ 30	B2
T52	Acer campestre Field Maple	5.0	4.0	4.0	2.0	4.0	0.25	1.00	1.00	N	EM	Good	Good	Low form, suppressed.	+ 30	B2
T53#	Carpinus betulus Hornbeam	4.0	2.0	2.0	2.0	2.0	0.15	1.00	1.50	-	Y	Good/Fair	Good	Young Hornbeam.	+ 10	C2
T54	Fraxinus excelsior Common Ash	7.0	4.0	4.0	3.0	4.0	0.30	1.00	2.00	-	EM	Good	Good	Set on planted bank.	+ 10	B2
T55	Fraxinus excelsior Common Ash	6.0	4.0	4.0	4.0	2.0	0.25	1.00	1.50	E	EM	Good	Good	Set on planted bank.	+ 10	B2
T56	Quercus robur Pedunculate Oak	6.0	2.0	2.0	3.0	3.0	0.02	1.00	2.00	W	Y	Good	Fair	Lacks some vigour.	+ 20	C2
T57	Acer saccharum Sugar Maple	6.0	4.0	2.0	4.0	4.0	Ave 0.1	6.00	1.00	S	Y	Good	Fair	Multi-stem, few pruning stubs.	+ 20	C2
T58	Quercus robur Pedunculate Oak	6.0	2.0	1.0	3.0	3.0	0.20	1.00	2.50	W	Y	Good	Good	Slight suppression to north west.	+ 30	B2
T59	Acer saccharum Sugar Maple	6.0	5.0	3.0	3.0	3.0	0.20	1.00	2.50	W	EM	Good	Good	Minor dead wood. Edge of car park.	+ 30	B2
T60	Acer campestre Field Maple	8.0	4.0	4.0	3.0	5.0	0.25	1.00	1.50	N	EM	Good	Good	Good potential.	+ 20	B2

Note: This survey is based on a brief visual inspection from the ground.
It is not intended as a full arboricultural inspection.
- Indicates estimated tree. * - Indicates off site tree.

Tree Survey Schedule

Site 250 Brook Drive, Green Park, Reading
Project schedule ref: 794-PLN-LAN-5156_750
Drawing reference: 794-PLN-LAN-5156_700
Survey date: 01/05/2024

Surveyor: D. Cox
Status:
Revision: .
Notes:

Ref. no.	Species	Height (m)	Crown spread (m) N	E	S	W	Stem dia. (m)	Stem no. at 1.5m	Height of crown clearance (m)	Dir/ height	Age class	Condition	Type	General observations Management recommendations	Estimated remaining contribution (years)	Tree Quality Category (BS5837)
T61	Quercus robur Pedunculate Oak	7.0	4.0	4.0	4.0	1.0	0.25	1.00	2.00	E	Y	Good	Good	Slightly suppressed, some potential.	+ 20	B2
T62#	Quercus robur Pedunculate Oak	4.0	1.0	1.0	1.0	1.0	0.10	1.00	2.00	-	Y	Good	Good	Immature sapling.	+ 10	C2
T63	Corylus avellana Common Hazel	4.0	2.0	3.0	2.0	2.0	<0.04	+10	1.50	E	Y	Good	Good	Coppice Hazel.	+ 10	C3
T64	Acer campestre Field Maple	6.0	4.0	4.0	4.0	4.0	0.15 x4	4.00	1.50	-	EM	Good	Good	Ivy clad, multi-stem.	+ 30	B2
T65#	Malus sp. Apple	4.0	2.0	3.0	3.0	3.0	0.1 x3	3.00	2.00	-	M	Good	Good/Fair	Tri-stem fruit tree.	+ 10	C3
T66	Alnus glutinosa (var) Common Alder	5.0	1.0	1.0	1.0	1.0	0.10	1.00	2.00	-	Y	Good	Good	Young planting, recently.	+ 10	C2
T67	Acer campestre Field Maple	3.0	1.0	1.0	1.0	1.0	0.10	1.00	2.00	-	Y	Poor	Poor	Car park planting, declining.	<10	U
T68	Acer campestre Field Maple	4.0	2.0	2.0	2.0	2.0	0.10	1.00	2.00	-	Y	Good	Good	Car park planting, standard form.	+ 10	C2
T69	Acer campestre Field Maple	5.0	2.0	2.0	2.0	2.0	0.1 x3	3.00	2.00	-	Y	Good	Good	Car park planting, tri-stem.	+ 20	C2
T70	Acer campestre Field Maple	5.0	2.0	2.0	2.0	2.0	0.15	1.00	2.00	-	Y	Good	Good	Car park planting, standard form.	+ 10	C2
G1	Acer campestre, Tilia cordata, Fraxinus excelsior, Betula pendula Field Maple, Small-leaved Lime, Common Ash, Silver Birch	8.0	see plan				up to 0.2	-	1.60	N	Y	Good	Good	Young tree group on top of small, high bank. 2m high. Some minor low and epicormic branches.	+ 30	B2

Note: This survey is based on a brief visual inspection from the ground.
It is not intended as a full arboricultural inspection.
- Indicates estimated tree. * - Indicates off site tree.

Tree Survey Schedule

Site 250 Brook Drive, Green Park, Reading

Project schedule ref: 794-PLN-LAN-5156_750

Drawing reference: 794-PLN-LAN-5156_700

Survey date: 01/05/2024

Surveyor: D. Cox

Status:

Revision: .

Notes:

Ref. no.	Species	Height (m)	Crown spread (m) N	E	S	W	Stem dia. (m)	Stem no. at 1.5m	Height of crown clearance (m)	Dir/ height	Age class	Condition	Type	General observations Management recommendations	Estimated remaining contribution (years)	Tree Quality Category (BS5837)
G2	Acer campestre, Salix fragilis, Alnus incana Field Maple, Crack Willow, Grey Alder	Ave 6	see plan				<0.15	var	1.00	-	EM	Good/Fair	Good	Series of individual, mostly multi-stem trees. Group value mainly.	+ 30	B2/3
G3	Acer campestre, Salix fragilis, Alnus incana Field Maple, Crack Willow, Grey Alder	Ave 5	see plan				<0.1	var	0.00	-	EM	Good	Good	Thicket planting, few maiden.	+ 30	B2/3
G4	Parrotia persica (var), Acer saccharinum Persian Ironwood, Silver Maple	Ave 5	see plan				Up to 0.15	var	1.00	-	Y	Good	Good	Series of individual, young multi-stem trees. Some potential.	+ 20	C1/2
G5	Acer campestre, Salix fragilis, Crataegus monogyna Field Maple, Crack Willow, Common Hawthorn	8.0	see plan				Est 0.2	var	0.00	-	EM	Good	Good	Dense, mix planting. Effective screen. On bank.	+ 30	B2/3
G6	Crataegus monogyna, Carpinus betulus, Cornus sanguinea, Acer campestre Common Hawthorn, Hornbeam, Common Dogwood, Field Maple	3.0	see plan				<0.1	-	-	-	EM	Good	Good	Understory thicket. On sloping bank.	+ 30	B2/3
H1	Acer campestre Field Maple	2.0	see plan				<0.08	var	0.00	-	Y	Good	Good	Clipped hedgerow sections, within car park.	+ 20	C2

Note: This survey is based on a brief visual inspection from the ground.
It is not intended as a full arboricultural inspection.
- Indicates estimated tree. * - Indicates off site tree.

Appendix C

Tree Constraints Plan

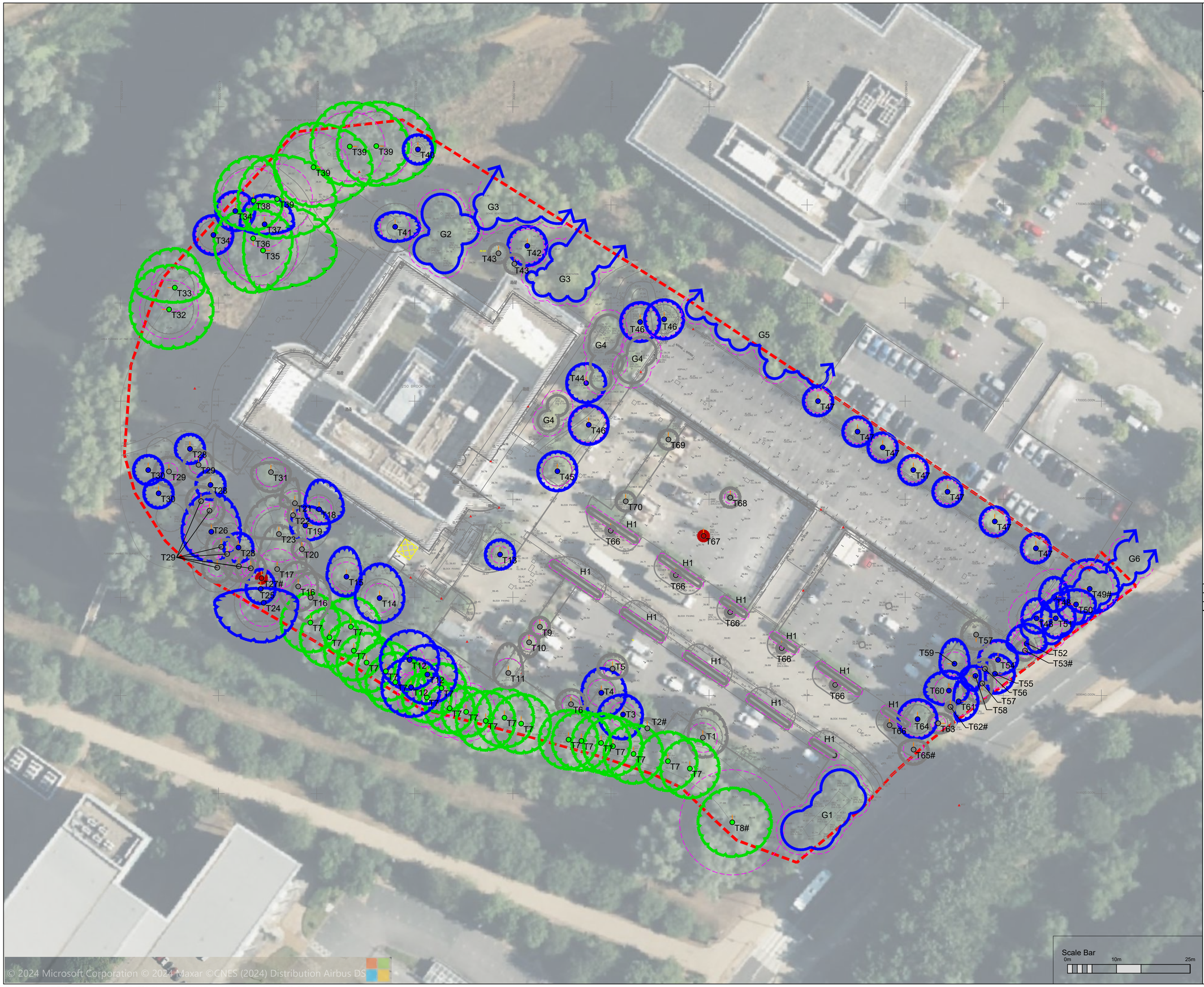

Scale Bar
0m 10m 25m

© 2023 RPS Group

Notes

1. This drawing has been prepared in accordance with the scope of RPS's appointment with its client and is subject to the terms and conditions of that appointment. RPS accepts no liability for any use of this document other than by its client and only for the purposes for which it was prepared and provided.
2. If received electronically it is the recipients responsibility to print to correct scale. Only written dimensions should be used.
3. Where applicable Ordnance Survey (c) Crown Copyright 2023 All rights reserved. Licence number 0100031673

Key

Survey boundary.

T1 — Tree with numbered reference. Canopy spread and coloured BS5837:2012 tree quality category as shown below.
= Tree details estimate (inaccessible tree)
* = Tree in off site location

G1 — Vegetation group with numbered reference. Canopy extents and coloured BS5837:2012 tree quality category as shown below.

H1 — Hedge with numbered reference. Canopy extents and coloured BS5837:2012 tree quality category as shown below.

W1 — Woodland with numbered reference. Canopy extents and coloured BS5837:2012 tree quality category as shown below.

BS 5837:2012 Tree Quality Categories - Table 1

- Category A - High quality
- Category B - Moderate quality
- Category C - Low quality
- Category U - Unsuitable for retention

Maximum canopy spread of mature tree estimated as a displacement of current canopy

Direction of first significant branch

Root protection area (RPA) Calculated in accordance with Section 4.6 - BS5837:2012

NOTES:

- Refer to RPS Tree Survey Report & Schedule for further details.
- Survey based on a visual inspection from the ground and is not intended as a full arboricultural inspection.
- Plan produced in accordance with recommendations set out in BS 5837:2012 - 'Trees in Relation to design, demolition and construction'.
- Due to the legal protection afforded to breeding birds vegetation removal should not take place during the bird nesting period; generally, although not restricted to, March - August inclusive.
- Survey based upon topographic survey produced by Warner Surveys in December, 2023
-

N

Rev	Description	By	CB	Date

MAKING COMPLEX EASY
A TETRA TECH COMPANY

Lakesbury House, Hiltingbury Road, Chandlers Ford, Hampshire SO53 5SS

T: 02380 810 440 E: rpsso@rpsgroup.com

Client: AWE

Project: 250 Brook Drive Reading

Title: Tree Survey

Status	Drawn By	PM/Checked by
For Information	SH	DC

Job Ref	Scale @ A2	Date Created
JSL5156	1:500	May 24

RPS Drawing / Figure Number	Rev
700	-

rpsgroup.com

Q:\Access A + B\5156 - Brook Drive, AWE (794-PLN-NPI-00039)\Tech\ACAD\Current\JSL5156_700.dwg

Appendix D

Tree Removal & Protection Plan

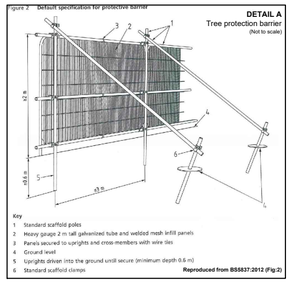

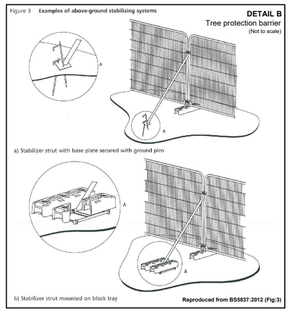

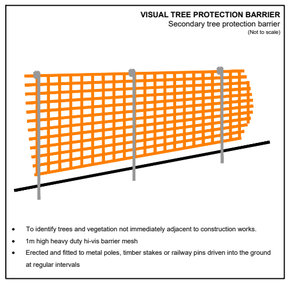

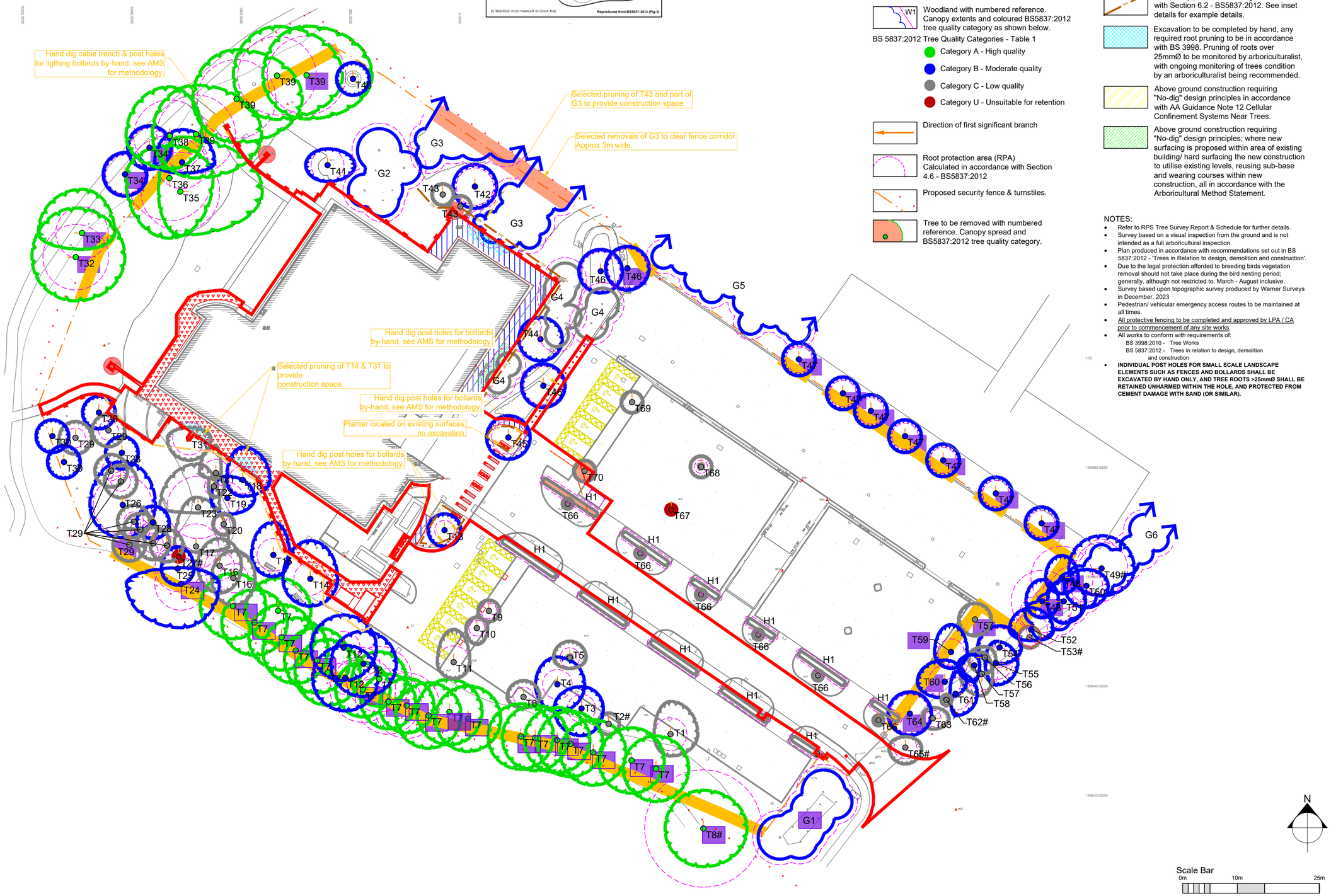

Key

Redline Boundary

T1 — Tree with numbered reference. Canopy spread and coloured BS5837:2012 tree quality category as shown below.
= Tree details estimate (inaccessible tree)
* = Tree in off site location

G1 — Vegetation group with numbered reference. Canopy extents and coloured BS5837:2012 tree quality category as shown below.

H1 — Hedge with numbered reference. Canopy extents and coloured BS5837:2012 tree quality category as shown below.

W1 — Woodland with numbered reference. Canopy extents and coloured BS5837:2012 tree quality category as shown below.

BS 5837:2012 Tree Quality Categories - Table 1

- Category A - High quality
- Category B - Moderate quality
- Category C - Low quality
- Category U - Unsuitable for retention

Direction of first significant branch

Root protection area (RPA) Calculated in accordance with Section 4.6 - BS5837:2012

Proposed security fence & turnstiles.

Tree to be removed with numbered reference. Canopy spread and BS5837:2012 tree quality category.

T1 — Tree to receive facilitation pruning works to provide safe construction space for fence, and an allowance for providing clear canopy space, from tree to top of fence. See RPS report for pruning specification.

Length of proposed fence installation, within RPA of retained tree. All post holes to be hand-excavated. If roots >25mm diameter are encountered, retain root in undamaged condition, and relocate post hole locally.

Temporary protective visual barrier, hi-vis mesh fence. See inset detail for example detail.

Temporary protective fencing in accordance with Section 6.2 - BS5837:2012. See inset details for example details.

Excavation to be completed by hand, any required root pruning to be in accordance with BS 3998. Pruning of roots over 25mmØ to be monitored by arboriculturalist, with ongoing monitoring of trees condition by an arboriculturalist being recommended.

Above ground construction requiring "No-dig" design principles in accordance with AA Guidance Note 12 Cellular Confinement Systems Near Trees.

Above ground construction requiring "No-dig" design principles; where new surfacing is proposed within area of existing building/ hard surfacing the new construction to utilise existing levels, reusing sub-base and wearing courses within new construction, all in accordance with the Arboricultural Method Statement.

NOTES:

- Refer to RPS Tree Survey Report & Schedule for further details.
- Survey based on a visual inspection from the ground and is not intended as a full arboricultural inspection.
- Plan produced in accordance with recommendations set out in BS 5837:2012 - 'Trees in Relation to design, demolition and construction'.
- Due to the legal protection afforded to breeding birds vegetation removal should not take place during the bird nesting period; generally, although not restricted to, March - August inclusive.
- Survey based upon topographic survey produced by Warner Surveys in December, 2023
- Pedestrian/ vehicular emergency access routes to be maintained at all times.
- All protective fencing to be completed and approved by LPA / CA prior to commencement of any site works.
- All works to conform with requirements of:
  BS 3998:2010 - Tree Works
  BS 5837:2012 - Trees in relation to design, demolition and construction
- **INDIVIDUAL POST HOLES FOR SMALL SCALE LANDSCAPE ELEMENTS SUCH AS FENCES AND BOLLARDS SHALL BE EXCAVATED BY HAND ONLY, AND TREE ROOTS >25mmØ SHALL BE RETAINED UNHARMED WITHIN THE HOLE, AND PROTECTED FROM CEMENT DAMAGE WITH SAND (OR SIMILAR).**

© 2023 RPS Group

Notes

1. This drawing has been prepared in accordance with the scope of RPS's appointment with its client and is subject to the terms and conditions of that appointment. RPS accepts no liability for any use of this document other than by its client and only for the purposes for which it was prepared and provided.
2. If received electronically it is the recipients responsibility to print to correct scale. Only written dimensions should be used.
3. Where applicable Ordnance Survey (c) Crown Copyright 2023 All rights reserved. Licence number 0100031673

Rev	Description	By	CB	Date
V4	Layout and works updated	DC	DC	14/01/26
V3	Redline Boundary Added	SH	DC	13/11/25
V2	Fence line updated	DC	DC	14.08.25
V1	Update of fencing proposal drawing	EP	DC	20.11.24

MAKING COMPLEX EASY
A TETRA TECH COMPANY
Lakesbury House, Hiltingbury Road, Chandlers Ford, Hampshire SO53 5SS
T: 02380 810 440 E: rpsso@rpsgroup.com

Client: AWE

Project: 250 Brook Drive Reading

Title: Tree Removal,Protection & Works Methodology Plan

Status	Drawn By	PM/Checked by
For Information	SH	DC
Job Ref	**Scale @ A2**	**Date Created**
JSL5156	1:500	Feb 2026
RPS Drawing / Figure Number		**Rev**
702		V1

rpsgroup.com

Appendix E

Example Tree Protection Barriers (BS5837:2012 Fig 2 & 3)

Figure 2 **Default specification for protective barrier**

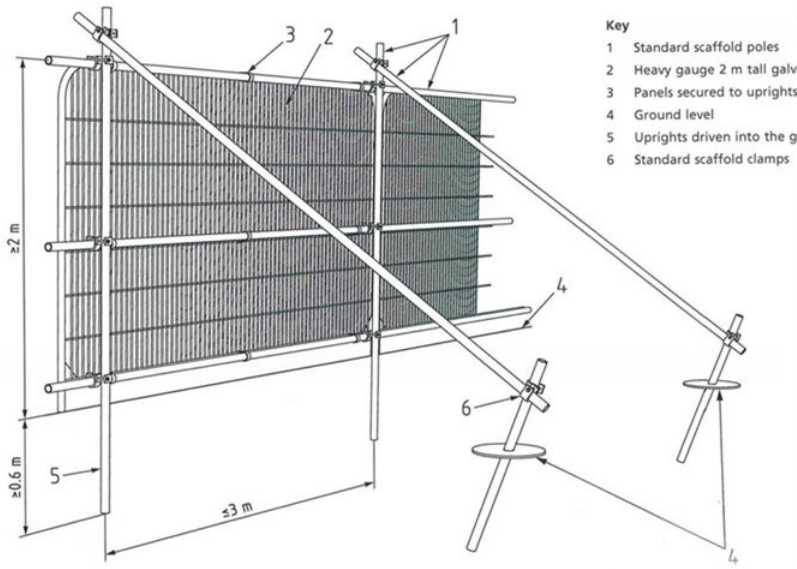

Key

1 Standard scaffold poles
2 Heavy gauge 2 m tall galvanized tube and welded mesh infill panels
3 Panels secured to uprights and cross-members with wire ties
4 Ground level
5 Uprights driven into the ground until secure (minimum depth 0.6 m)
6 Standard scaffold clamps

Figure 3 **Examples of above-ground stabilizing systems**

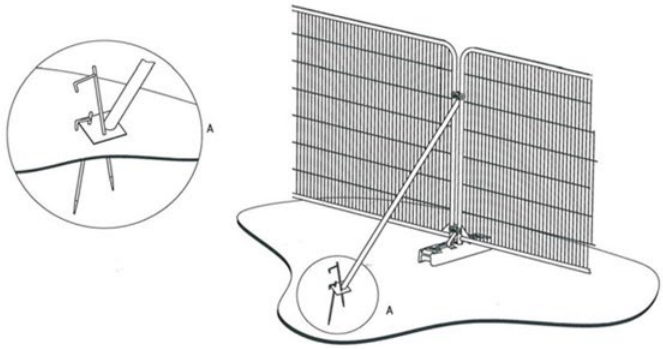

a) Stabilizer strut with base plate secured with ground pins

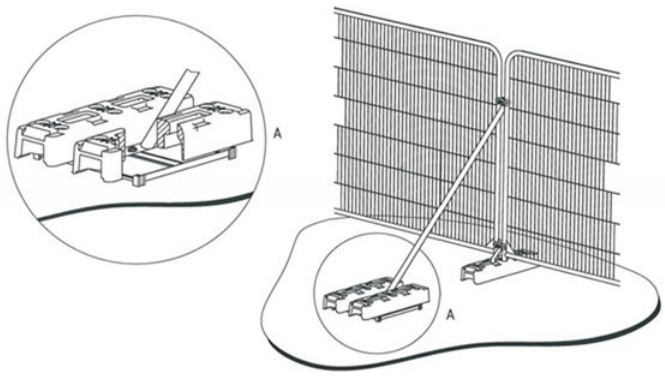

b) Stabilizer strut mounted on block tray

Appendix F

Construction Exclusion Zone (CEZ) Sign

Appendix G

Arboricultural Glossary

Age-class - A general classification of the tree into either - young, semi-mature, early mature, mature, over-mature, or veteran.

Apical Bud/Shoot – The apical bud, also known as the leading shoot, is responsible for shoot extension and is dominant.

Apical Dominance – A singular, leading shoot remains dominant.

Arboreal - In connection with, or in relation to, trees.

Arboriculturist – Person who has, through relevant education, training and experience, gained recognised qualifications and expertise in the field of trees in relation to construction.

Arboricultural Implications Assessment (AIA) – Study, undertaken by an arboriculturist, to identify, evaluate and possibly mitigate the extent of direct and indirect impacts on existing trees that may arise as a result of the implementation of any site layout proposal.

Arboricultural Method Statement (AMS) – Methodology for the implementation of any aspect of development that has the potential to result in the loss of or damage to a tree. Note The AMS is likely to include details of an on-site tree protection monitoring regime.

Asymmetric crown- Crowns that have a morphological bias in a particular direction. This can give the tree an aesthetically unfavourable appearance but can also subject the tree to uneven wind- loading forces and potentially result in failure.

Basal – Referring to the bottom part of a tree's stem.

Basifugal mortality – A natural process seen in trees in an advanced life stage whereby the trees extremities die back, and the inner crown expresses new growth, in order to conserve energy reserves.

Bifurcated - A growth characteristic, where two stems of similar size grow from the same point. Can create an inherent weakness.

Branch union/junction - The point at which a branch joins a larger stem. Can be a point of weakness, especially in certain species.

Brown Rot- Decay caused by certain species of fungus which results in the affected wood becoming brittle and liable to suddenly 'break out', especially if in key structural areas.

Buttress flares – Extensions of the basal stem of a tree that provide additional structural support. See reaction wood.

Bifurcated- A growth characteristic, where two or more stems of similar size grow from the same point. Can create an inherent weakness.

Cable braces – Cable braces used to support the crown of a tree, reduce impacts caused by wind- throw oscillation.

Canker – A clearly defined area of dead and sunken or malformed bark, caused by bacteria or fungi. Can have a bearing on structural integrity of infected limb(s) depending on size and location.

Central leader- See apical dominance.

Chalara ash dieback- A disease affecting ash trees caused by the fungus *Hymenoscyphus fraxineus*. Usually fatal, the disease causes leaf loss and crown dieback in infected trees. It was first confirmed in Britain in 2012.

Chlorosis- yellowing of leaves which can be caused by a range of factors, often an indicator of nutrient deficiency.

Compaction - The compressing & hardening of soil around tree root systems, due to vehicular/pedestrian use etc. Loss of pore space between soil granules limits water movement and gaseous exchange and inhibits root growth.

Companion shelter- Shelter provided by neighbouring trees in groups to one another, factors such as wind throw are reduced due to supporting branches and interlocking root systems. Removing individual trees on the peripheries of such groups can expose neighbouring trees to environmental factors they have not previously been subjected to and can lead to individual failure.

Competent person – Person who has training and experience relevant to the matter being addressed and an understanding of the requirements of the particular task being approached

Note 1 A competent person understands the hazards and the methods to be implemented to eliminate or reduce the risks that can arise. For example, when on site, a competent person is able to recognise at all times whether it is safe to proceed.

Note 2 A competent person is able to advise on the best means by which the recommendations of this British Standard may be implemented.

Condition – Assessment based on a visual and professional view giving consideration to many factors such as tree health, structural integrity and suitability of its position.

Conservation dead- wooding- Removal of deadwood using ‘coronet cuts’ that mimic the way a branch would naturally break off, maximising deadwood habitat availability for invertebrates.

Coppice - The method of managing trees by cutting the stems at between 1.0 inch and 1.0 foot from the ground level on a regular cycle, the cut stumps of the trees or shrubs are allowed to re-grow many new stems.

Crown spread - Gives distances between extreme limits of the crown and the stem, usually along the four compass points. Helps to show crown symmetry.

Crown Reduction – The removal of branch ends to reduce the extreme limits of a tree’s branch spread and height.

Crown Thin – The removal of selected branches within the crown to thin the internal branch structure.

D.B.H. - 'Diameter at Breast Height', an industry standard to gauge tree stem size and development. Within arboriculture, breast height is taken to be 1.5m above ground level.

Dieback - The reduction in crown vigour and extension growth progressing to death of distal parts; often associated with decline.

Epicormic growth - New growth from dormant buds that can often form tenuous attachments. Although some species readily form such shoots, it can be an indication of stress.

Form - A general assessment of the shape and position of the tree within its environment.

Hanger – Term used to describe a branch that has become detached and is being supported by other branches. Can be a hazard to persons and property below.

Hazard Beam – After the loss of a distal part, a limb concentrates growth upwards creating adverse end weights that can render the limb susceptible to failure.

Included bark – Growth characteristic usually caused when two or more stems/branches growing in close proximity 'fuse' together entrapping the bark from when the parts were separate in the middle, creating a structural weakness.

Invertebrate tower – Pollarding of a (usually dead) tree to a safe height that leaves part of the main stem as a deadwood habitat for invertebrate species.

Occlusion/Occluded – Normally used to describe the overgrowth of a wound. Also, immoveable foreign objects in contact with a tree part can become encased or 'occluded' by the tree as it grows incrementally.

Pathogen - An agent that causes disease, especially a living microorganism such as a bacterium or fungus.

Phototropic growth – Growth responding to a light stimulus i.e. the sun. This can influence the form of a tree, particularly where other factors e.g. buildings or other trees, affect the amount/ direction light is received.

Pollard – The removal and subsequent regular re-removal of the crown of a tree above animal browsing height. Can be an effective method of controlling the size of trees in urban areas. This is ideally begun in the trees early stages and maintained throughout its life.

Reaction wood - Essentially additional wood laid down by the tree to compensate for structural defects such as cavities.

Rhizosphere - The rhizosphere is the narrow region of soil that is directly influenced by root secretions and associated soil microorganisms. In particular, mycorrhizal fungi form a symbiotic relationship with trees and assist in the assimilation of phosphates essential to the tree's health.

Ring barking/Girdling – the removal of bark around the entire circumference of a stem or branch, causing the death of all distal parts.

Root Protection Area (RPA) – Layout design tool indicating the area surrounding a tree that contains sufficient rooting volume to ensure the survival of the tree, shown in plan form in m^2.

Scaffold limbs - The main structural branches within the crown.

Tree Removal & Protection Plan – scale drawing prepared by an arboriculturist showing the finalised layout proposals, tree retention and tree and landscape protection measures detailed within the AMS, which can be shown graphically.

U.L.E – 'Useful Life Expectancy' is an estimate based on currently known factors of the possible remaining life of the tree as an asset. AKA 'Estimated remaining contribution'.

Veteran tree – Tree that, by recognised criteria, shows features of biological, cultural or aesthetic value that are characteristic of, but not exclusive to, individuals surviving beyond the typical age range for the species concerned.

Vigour - A general classification, as to the present and future potential growth and development of a tree. A comment regarding the health status of the tree specific to its species.

White Rot - A type of decay caused by certain species of fungi which results in the affected wood becoming flexible with little compressive strength.