RAPTOR SPA

Plate Mounted Axial Flow Fan

ELTA

» **Select** models available for next day delivery

RAPTOR SPA

Product Overview

- 9 standard sizes from 250mm to 710mm
- Air volume flow rates up to 6.27 m³/s
- Static pressures up to 298 Pa
- Suitable for operating temperatures up to +70°C
- Available in **AC** & **EC**

The Raptor SPA incorporates the Ziehl-Abegg FE2owlet aerofoil profiled impeller. Both strong and durable, this range also boasts low noise and increased efficiency levels.

Intelligent Design
Compact low profile design suitable for vertical or horizontal mounting.

Easy Installation
A fitted IP55 terminal box allows the fan to be positioned conveniently to incoming electrical inputs.

Designed For Efficiency
Aerofoil section, sickle shaped blades, with serrated trailing edges and winglets based on bionic insights.

Corrosion Resistance
Specially treated against corrosion, powder coated with polyester epoxy paint in pastel beige (RAL 7032).

Controllability
A range of control options are available to reduce fan speeds to desired performance needs.

Warranty
Each SPA has a 12 month warranty.

Construction
Constructed from mild steel and suitably treated to ensure full corrosion protection. Guards are powder coated polyester epoxy paint finish in black (RAL 9005). Fan plates are powder coated polyester epoxy paint finish in pastel beige.

Motor
Motors are highly efficient, lightweight external rotor motors, insulated to Class F complete with integral thermal overload protection. Sizes 250-350 are weatherproofed to IP44. Sizes 400-710 are weatherproofed to IP54. All fans are suitable for use with a speed controller.

Impeller
The Ziehl-Abegg FE2owlet impeller has a unique serrated trailing edge which provides optimised flow and improved acoustics. The Aerofoil blades, complete with winglets, enable increased impeller efficiency.

Typical Applications
- Sports Hall
- Squash Courts
- Schools & Colleges
- Shops
- Retail Parks
- Commercial
- Kitchens
- Factories
- Industrial Units
- Warehousing

Contents

Page	Information	Load
3	Performance Range Curves	
4	Performance, SFP & Electrical Data	AC
6	Performance, SFP & Electrical Data	EC
9	Sound Data	AC
11	Sound Data	EC
13	Dimensional Data	
14	Accessories	
22	Notes	

Product Coding

Code	Reference
SPA	Product Range
250	Diameter (250/315/350...)
/	
2	Number of Poles (2/4/6)
–	
1	Voltage Supply (Single Phase / Three Phase)
AC	Motor Type (AC/EC)
A - Z	Additional Coding (A - Z) Product Variants
e.g.	**SPA250 / 2 - 1AC**

Tel **01384 275800** Fax **01384 275810** Email **info@eltauk.com** Website **eltauk.com**

RAPTOR SPA

Performance Range Curves

AC EC

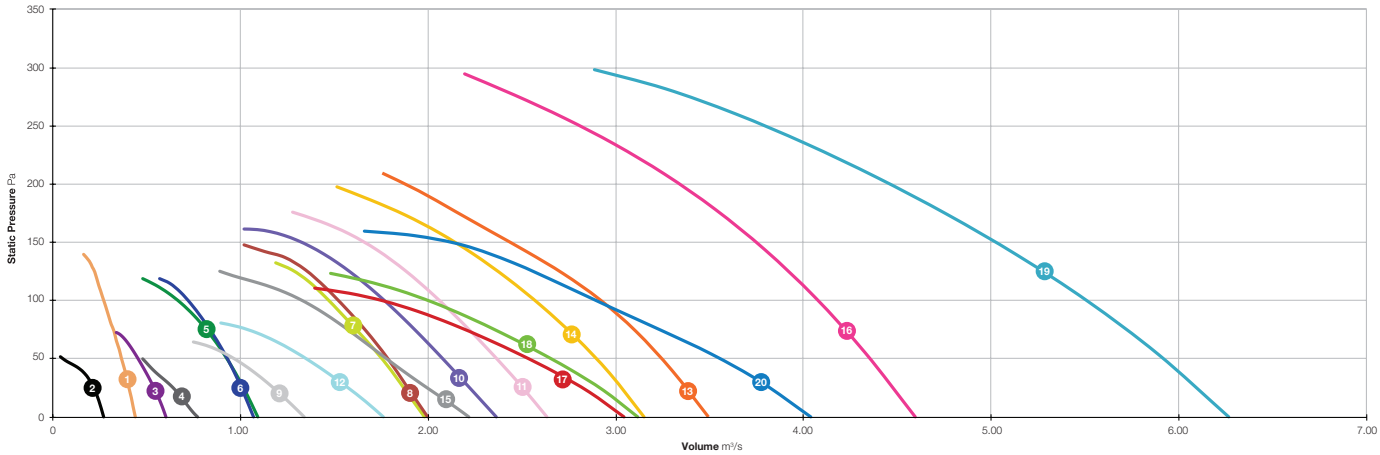

1 SPA250 / 2-1AC
2 SPA250 / 4-1AC
3 SPA315 / 4-1AC
4 SPA350 / 4-1AC
5 SPA400 / 4-1AC
6 SPA400 / 4 / 6-3AC*
7 SPA450 / 4-1AC
8 SPA450 / 4 / 6-3AC*
9 SPA450 / 6-1AC
10 SPA500 / 6-1AC
11 SPA500 / 4 / 6-3AC*
12 SPA500 / 6-1AC
13 SPA560 / 4-1AC
14 SPA560 / 4 / 6-3AC
15 SPA560 / 6-1AC
16 SPA630 / 4 / 6-3AC*
17 SPA630 / 6-1AC
18 SPA630 / 6 / 8-3AC*
19 SPA710 / 4 / 6-3AC*
20 SPA710 / 6 / 8-3AC*

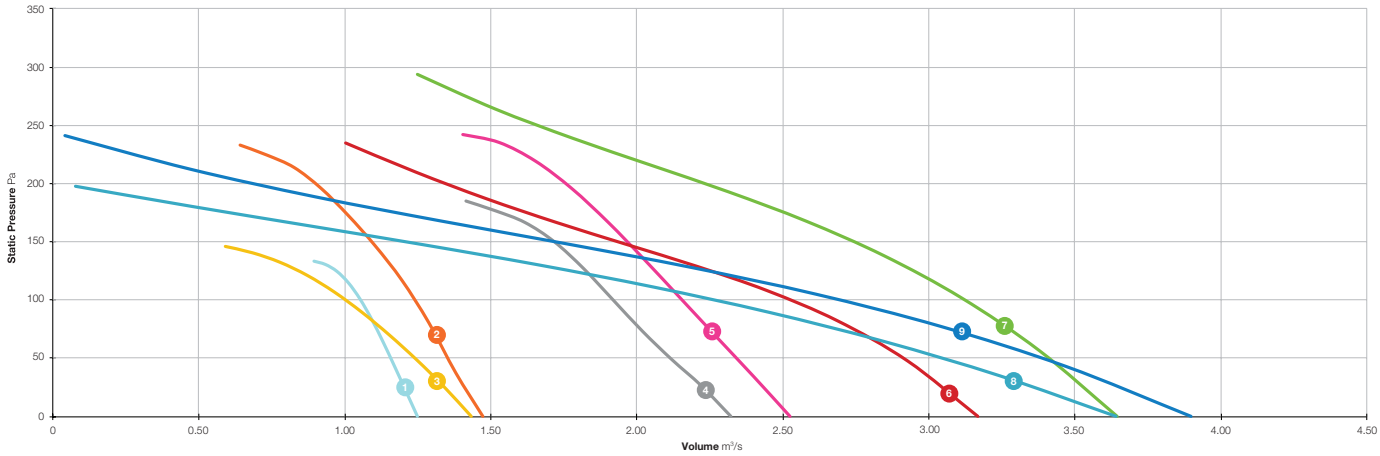

1 SPA350 / 4-1EC
2 SPA400 / 4-1EC
3 SPA450 / 4-1EC
4 SPA500 / 4-1EC
5 SPA500 / 4-3EC
6 SPA630 / 4-1EC
7 SPA630 / 4-3EC
8 SPA710 / 6-1EC
9 SPA710 / 6-3EC

*For low speed data refer to performance tables.

Elta Limited has a policy of continuous product development and improvement and therefore reserves the right to supply products which may differ from those illustrated and described in this publication.
Confirmation of dimensions and data will be supplied on request.

RAPTOR SPA

Performance, SFP & Electrical Data

AC

Single Phase 220V to 240V / 50Hz

Product Code	Speed r/min	Airflow SFP	Airflow m³/s @ Static Pressure Pa							At Best Efficiency Point			Electrical Data		dBA @ 3m	
			0	25	50	75	100	150	200	Overall Eff %	FMEG N	Input kW	Peak Amps	SC Amps		
SPA250/2-1AC	2119	m³/s	0.440	0.404	0.365	0.322	0.274	-	-	-	<125W	0.125	0.57	0.84	Inlet	50
		W/(L/s)	0.28	0.30	0.33	0.39	0.48	-	-						Outlet	50
SPA250/4-1AC	1368	m³/s	0.273	0.219	0.114	-	-	-	-	-	<125W	0.046	0.24	0.40	Inlet	37
		W/(L/s)	0.17	0.22	0.42	-	-	-	-						Outlet	37
SPA315/4-1AC	1320	m³/s	0.602	0.539	0.454	-	-	-	-	-	<125W	0.110	0.50	1.00	Inlet	44
		W/(L/s)	0.19	0.20	0.24	-	-	-	-						Outlet	45
SPA350/4-1AC	1100	m³/s	0.770	0.642	0.483	-	-	-	-	19.3	<125W	0.120	0.60	-	Inlet	40
		W/(L/s)	0.15	0.18	0.26	-	-	-	-						Outlet	42
SPA400/4-1AC	1372	m³/s	1.093	1.018	0.929	0.820	0.669	-	-	31.1	41.3	0.240	0.46	1.60	Inlet	48
		W/(L/s)	0.17	0.19	0.23	0.27	0.35	-	-						Outlet	48
SPA450/4-1AC	1323	m³/s	1.981	1.871	1.755	1.618	1.472	-	-	34.0	41.8	0.545	2.45	6.30	Inlet	49
		W/(L/s)	0.24	0.27	0.29	0.33	0.37	-	-						Outlet	48
SPA450/6-1AC	926	m³/s	1.342	1.177	0.968	-	-	-	-	30.0	41.0	0.189	0.90	2.50	Inlet	41
		W/(L/s)	0.12	0.15	0.19	-	-	-	-						Outlet	41
SPA500/4-1AC	1210	m³/s	2.365	2.223	2.080	1.930	1.768	1.326	-	32.9	40.3	0.750	3.46	-	Inlet	51
		W/(L/s)	0.31	0.34	0.36	0.38	0.41	0.60	-						Outlet	50
SPA500/6-1AC	918	m³/s	1.761	1.574	1.352	1.043	-	-	-	30.4	40.6	0.289	1.30	2.80	Inlet	44
		W/(L/s)	0.14	0.17	0.21	0.28	-	-	-						Outlet	44
SPA560/4-1AC	1350	m³/s	3.494	3.376	3.246	3.099	2.922	2.438	1.883	35.8	41.8	1.150	5.10	11.00	Inlet	63
		W/(L/s)	0.31	0.32	0.34	0.37	0.39	0.48	0.63						Outlet	63
SPA560/6-1AC	930	m³/s	2.217	1.995	1.779	1.572	1.330	-	-	33.0	42.0	0.390	2.80	5.30	Inlet	52
		W/(L/s)	0.26	0.29	0.33	0.38	0.45	-	-						Outlet	52
SPA630/6-1AC	892	m³/s	3.044	2.823	2.538	2.201	1.762	-	-	32.2	40.0	0.660	3.10	5.30	Inlet	49
		W/(L/s)	0.17	0.19	0.23	0.28	0.37	-	-						Outlet	50

Data provided is at standard air density of 1.2 kg/m³.
Data in accordance with ErP 327/2011 of the European Parliament. Measurement category used to determine energy efficiency: A.
Peak Amps @ 230V / 1PH / 50Hz.
The overall A-weighted sound pressure level is at a distance of 3m with spherical free-field propagation. It is expressed in dB re-20μPa and is presented for comparative purposes only.

RAPTOR SPA

Performance, SFP & Electrical Data

AC

Three Phase 380V to 415V / 50Hz

Product Code	Speed r/min	Airflow SFP	Airflow m³/s @ Static Pressure Pa								At Best Efficiency Point			Electrical Data			dBA @ 3m	
			0	25	50	75	100	150	200	250	Overall Eff %	FMEG N	Input kW	Peak Amps	SC Amps	Δ / Y		
SPA400/4/6-3AC	1372	m³/s	1.071	1.006	0.932	0.839	0.723	-	-	-	32.4	42.7	0.227	0.46	1.60	Δ	Inlet	48
		W/(L/s)	0.16	0.18	0.22	0.26	0.32	-	-	-							Outlet	49
	1105	m³/s	0.936	0.826	0.685	-	-	-	-	-	-		0.170	0.27	0.55	Y	Inlet	45
		W/(L/s)	0.14	0.17	0.23	-	-	-	-	-							Outlet	46
SPA450/4/6-3AC	1354	m³/s	1.998	1.892	1.787	1.665	1.524	-	-	-	34.0	41.8	0.538	1.08	3.80	Δ	Inlet	50
		W/(L/s)	0.22	0.25	0.27	0.30	0.34	-	-	-							Outlet	49
	1016	m³/s	1.621	1.450	1.258	0.985	-	-	-	-	-		0.380	0.68	2.60	Y	Inlet	45
		W/(L/s)	0.21	0.24	0.29	0.38	-	-	-	-							Outlet	45
SPA500/4/6-3AC	1342	m³/s	2.633	2.505	2.366	2.219	2.062	1.667	-	-	34.2	41.3	0.764	1.46	4.70	Δ	Inlet	53
		W/(L/s)	0.23	0.26	0.29	0.32	0.36	0.48	-	-							Outlet	53
	960	m³/s	2.082	1.846	1.571	1.228	-	-	-	-	-		0.550	0.96	1.55	Y	Inlet	48
		W/(L/s)	0.23	0.27	0.33	0.43	-	-	-	-							Outlet	47
SPA560/4/6-3AC	1293	m³/s	3.149	3.031	2.897	2.744	2.570	2.147	-	-	33.7	40.1	1.040	2.40	7.00	Δ	Inlet	57
		W/(L/s)	0.24	0.26	0.29	0.32	0.36	0.46	-	-							Outlet	57
	995	m³/s	2.475	2.237	1.969	1.640	0.987	-	-	-	-		0.570	1.25	2.30	Y	Inlet	51
		W/(L/s)	0.20	0.23	0.27	0.34	0.58	-	-	-							Outlet	51
SPA630/4/6-3AC	1327	m³/s	4.597	4.481	4.357	4.223	4.079	3.749	3.341	2.809	40.7	45.5	1.812	3.43	21.0	Δ	Inlet	67
		W/(L/s)	0.33	0.35	0.37	0.39	0.41	0.46	0.53	0.64							Outlet	67
	919	m³/s	3.819	3.637	3.434	3.208	2.955	2.344	-	-	-		1.250	2.50	7.00	Y	Inlet	60
		W/(L/s)	0.28	0.31	0.33	0.36	0.40	0.52	-	-							Outlet	60
SPA630/6/8-3AC	903	m³/s	3.115	2.912	2.652	2.351	1.995	-	-	-	33.8	41.6	0.630	1.26	4.90	Δ	Inlet	50
		W/(L/s)	0.14	0.17	0.20	0.24	0.30	-	-	-							Outlet	49
	725	m³/s	2.703	2.385	1.946	1.299	-	-	-	-	-		0.440	0.73	2.80	Y	Inlet	47
		W/(L/s)	0.12	0.16	0.21	0.34	-	-	-	-							Outlet	45
SPA710/4/6-3AC	1358	m³/s	6.268	6.101	5.920	5.724	5.510	5.026	4.462	3.796	37.9	41.7	2.573	4.88	21.0	Δ	Inlet	60
		W/(L/s)	0.30	0.33	0.35	0.38	0.41	0.47	0.56	0.63							Outlet	60
	1091	m³/s	5.271	5.015	4.717	4.373	3.986	3.102	-	-	-		1.740	2.89	7.00	Y	Inlet	55
		W/(L/s)	0.27	0.29	0.32	0.36	0.41	0.55	-	-							Outlet	55
SPA710/6/8-3AC	899	m³/s	4.041	3.824	3.560	3.237	2.898	2.137	-	-	38.2	44.9	0.861	1.72	5.80	Δ	Inlet	49
		W/(L/s)	0.14	0.16	0.19	0.24	0.28	0.43	-	-							Outlet	49
	676	m³/s	3.509	3.089	2.589	1.968	-	-	-	-	-		0.640	1.10	2.00	Y	Inlet	46
		W/(L/s)	0.13	0.17	0.22	0.31	-	-	-	-							Outlet	45

Data provided is at standard air density of 1.2 kg/m³.
Data in accordance with ErP 327/2011 of the European Parliament. Measurement category used to determine energy efficiency: A.
Peak Amps @ 400V / 3PH / 50Hz.
The overall A-weighted sound pressure level is at a distance of 3m with spherical free-field propagation. It is expressed in dB re-20μPa and is presented for comparative purposes only.

Elta Limited has a policy of continuous product development and improvement and therefore reserves the right to supply products which may differ from those illustrated and described in this publication.
Confirmation of dimensions and data will be supplied on request.

RAPTOR SPA

Performance, SFP & Electrical Data

EC

Single Phase 220V to 277V / 50Hz or 60Hz

Product Code	Control Voltage V	Speed r/min	Airflow SFP	Airflow m³/s @ Static Pressure Pa							At Best Efficiency Point			Electrical Data	dBA @ 3m	
				0	25	50	75	100	150	200	Overall Eff %	FMEG N	Input kW	Peak Amps		
SPA350/4-1EC	10	1952	m³/s	1.247	1.201	1.156	1.108	1.053	-	-	38.6	47.2	0.429	2.00	Inlet	57
			W/(L/s)	0.29	0.32	0.34	0.37	0.40	-	-					Outlet	57
	8	1544	m³/s	0.996	0.928	0.861	0.774	0.681	-	-	-		-	1.12	Inlet	52
			W/(L/s)	0.19	0.21	0.24	0.28	0.33	-	-					Outlet	52
	5	935	m³/s	0.596	0.495	-	-	-	-	-	-		-	0.34	Inlet	40
			W/(L/s)	0.09	0.12	-	-	-	-	-					Outlet	41
	2	321	m³/s	0.200	-	-	-	-	-	-	-		-	0.11	Inlet	20
			W/(L/s)	0.05	-	-	-	-	-	-					Outlet	20
SPA400/4-1EC	10	1810	m³/s	1.472	1.406	1.353	1.300	1.240	1.092	0.901	49.5	58.5	0.490	2.50	Inlet	58
			W/(L/s)	0.26	0.29	0.31	0.34	0.37	0.46	0.60					Outlet	58
	8	1435	m³/s	1.161	1.090	1.014	0.925	0.809	-	-	-		-	1.29	Inlet	53
			W/(L/s)	0.17	0.20	0.23	0.26	0.31	-	-					Outlet	52
	5	864	m³/s	0.695	0.563	0.364	-	-	-	-	-		-	0.38	Inlet	41
			W/(L/s)	0.08	0.11	0.19	-	-	-	-					Outlet	41
	2	305	m³/s	0.213	-	-	-	-	-	-	-		-	0.11	Inlet	20
			W/(L/s)	0.03	-	-	-	-	-	-					Outlet	20
SPA450/4-1EC	10	1300	m³/s	1.434	1.342	1.240	1.129	1.002	-	-	41.0	50.6	0.300	1.65	Inlet	54
			W/(L/s)	0.16	0.19	0.22	0.26	0.31	-	-					Outlet	55
	8	1027	m³/s	1.121	0.998	0.854	0.672	-	-	-	-		-	0.80	Inlet	49
			W/(L/s)	0.10	0.13	0.17	0.24	-	-	-					Outlet	50
	5	621	m³/s	0.671	0.436	-	-	-	-	-	-		-	0.25	Inlet	38
			W/(L/s)	0.05	0.10	-	-	-	-	-					Outlet	39
	2	212	m³/s	0.222	-	-	-	-	-	-	-		-	0.11	Inlet	20
			W/(L/s)	0.04	-	-	-	-	-	-					Outlet	20
SPA500/4-1EC	10	1432	m³/s	2.321	2.226	2.114	2.012	1.919	1.719	-	40.1	46.9	0.747	3.46	Inlet	56
			W/(L/s)	0.26	0.29	0.32	0.35	0.38	0.44	-					Outlet	56
	8	1148	m³/s	1.850	1.713	1.603	1.493	1.361	-	-	-		-	1.90	Inlet	51
			W/(L/s)	0.17	0.20	0.23	0.26	0.30	-	-					Outlet	51
	5	690	m³/s	1.074	0.878	-	-	-	-	-	-		-	0.49	Inlet	40
			W/(L/s)	0.07	0.10	-	-	-	-	-					Outlet	40
	2	230	m³/s	0.276	-	-	-	-	-	-	-		-	0.23	Inlet	20
			W/(L/s)	0.11	-	-	-	-	-	-					Outlet	20

Data provided is at standard air density of 1.2 kg/m³.
Data in accordance with ErP 327/2011 of the European Parliament. Measurement category used to determine energy efficiency: A.
A variable speed drive is integrated within the fan.
Peak Amps @ 230V / 1PH / 50Hz.
The overall A-weighted sound pressure level is at a distance of 3m with spherical free-field propagation. It is expressed in dB re-20μPa and is presented for comparative purposes only.

RAPTOR SPA

Performance, SFP & Electrical Data

EC

Single Phase 220V to 277V / 50Hz or 60Hz

Product Code	Control Voltage V	Speed r/min	Airflow SFP	Airflow m³/s @ Static Pressure Pa							At Best Efficiency Point			Electrical Data	dBA @ 3m	
				0	25	50	75	100	150	200	Overall Eff %	FMEG N	Input kW	Peak Amps		
SPA630/4-1EC	10	1055	m³/s	3.167	3.051	2.913	2.743	2.528	1.937	1.347	46.3	53.3	0.772	4.09	Inlet	53
			W/(L/s)	0.19	0.21	0.23	0.25	0.29	0.41	0.63					Outlet	51
	8	845	m³/s	2.547	2.370	2.169	1.913	1.543	-	-	-		-	2.16	Inlet	49
			W/(L/s)	0.12	0.14	0.17	0.21	0.27	-	-					Outlet	48
	5	507	m³/s	1.530	1.164	0.508	-	-	-	-	-		-	0.55	Inlet	40
			W/(L/s)	0.05	0.08	0.22	-	-	-	-					Outlet	40
	2	169	m³/s	0.496	-	-	-	-	-	-	-		-	0.26	Inlet	20
			W/(L/s)	0.23	-	-	-	-	-	-					Outlet	20
SPA710/6-1EC	10	892	m³/s	3.640	3.361	3.047	2.687	2.268	1.214	-	46.3	53.8	0.659	3.98	Inlet	51
			W/(L/s)	0.15	0.17	0.20	0.24	0.29	0.59	-					Outlet	51
	8	712	m³/s	2.900	2.550	2.108	1.529	0.814	-	-	-		-	2.09	Inlet	46
			W/(L/s)	0.10	0.12	0.16	0.23	0.46	-	-					Outlet	46
	5	427	m³/s	1.743	0.964	-	-	-	-	-	-		-	0.55	Inlet	33
			W/(L/s)	0.04	0.09	-	-	-	-	-					Outlet	33
	2	143	m³/s	0.585	-	-	-	-	-	-	-		-	0.23	Inlet	20
			W/(L/s)	0.05	-	-	-	-	-	-					Outlet	20

Data provided is at standard air density of 1.2 kg/m³.
Data in accordance with ErP 327/2011 of the European Parliament. Measurement category used to determine energy efficiency: A.
A variable speed drive is integrated within the fan.
Peak Amps @ 230V / 1PH / 50Hz.
The overall A-weighted sound pressure level is at a distance of 3m with spherical free-field propagation. It is expressed in dB re-20μPa and is presented for comparative purposes only.

Elta Limited has a policy of continuous product development and improvement and therefore reserves the right to supply products which may differ from those illustrated and described in this publication.
Confirmation of dimensions and data will be supplied on request.

RAPTOR SPA

Performance, SFP & Electrical Data

EC

Three Phase 380V to 480V / 50Hz or 60Hz

Product Code	Control Voltage V	Speed r/min	Airflow SFP	Airflow m³/s @ Static Pressure Pa								At Best Efficiency Point			Electrical Data	dBA @ 3m	
				0	25	50	75	100	150	200	250	Overall Eff %	FMEG N	Input kW	Peak Amps		
SPA500/4-3EC	10	1555	m³/s	2.525	2.435	2.342	2.248	2.155	1.967	1.755	-	41.8	46.5	0.948	1.57	Inlet	58
			W/(L/s)	0.31	0.33	0.36	0.38	0.41	0.56	0.54	-					Outlet	58
	8	1245	m³/s	2.019	1.896	1.776	1.678	1.569	-	-	-	-		-	0.96	Inlet	52
			W/(L/s)	0.20	0.22	0.26	0.29	0.32	-	-	-					Outlet	52
	5	747	m³/s	1.184	0.998	-	-	-	-	-	-	-		-	0.35	Inlet	42
			W/(L/s)	0.08	0.11	-	-	-	-	-	-					Outlet	42
	2	267	m³/s	0.341	-	-	-	-	-	-	-	-		-	0.17	Inlet	20
			W/(L/s)	0.02	-	-	-	-	-	-	-					Outlet	20
SPA630/4-3EC	10	1208	m³/s	3.645	3.534	3.412	3.276	3.123	2.743	2.230	1.656	48.5	54.6	1.100	2.03	Inlet	56
			W/(L/s)	0.24	0.25	0.28	0.30	0.33	0.40	0.52	0.74					Outlet	54
	8	971	m³/s	2.939	2.786	2.614	2.416	2.181	1.546	0.716	-	-		-	1.18	Inlet	53
			W/(L/s)	0.16	0.18	0.20	0.23	0.27	0.41	0.96	-					Outlet	52
	5	582	m³/s	1.751	1.483	0.940	-	-	-	-	-	-		-	0.43	Inlet	42
			W/(L/s)	0.07	0.09	0.15	-	-	-	-	-					Outlet	43
	2	194	m³/s	0.662	-	-	-	-	-	-	-	-		-	0.17	Inlet	20
			W/(L/s)	0.03	-	-	-	-	-	-	-					Outlet	20
SPA710/6-3EC	10	962	m³/s	3.897	3.660	3.388	3.073	2.697	1.723	0.687	-	47.7	54.8	0.770	1.80	Inlet	54
			W/(L/s)	0.17	0.19	0.21	0.25	0.29	0.49	1.39	-					Outlet	54
	8	768	m³/s	3.108	2.805	2.425	1.919	1.263	0.115	-	-	-		-	1.05	Inlet	48
			W/(L/s)	0.11	0.13	0.16	0.22	0.35	4.96	-	-					Outlet	48
	5	461	m³/s	1.868	1.225	0.193	-	-	-	-	-	-		-	0.40	Inlet	35
			W/(L/s)	0.05	0.08	0.67	-	-	-	-	-					Outlet	36
	2	154	m³/s	0.539	-	-	-	-	-	-	-	-		-	0.17	Inlet	20
			W/(L/s)	0.03	-	-	-	-	-	-	-					Outlet	20

Data provided is at standard air density of 1.2 kg/m³.
Data in accordance with ErP 327/2011 of the European Parliament. Measurement category used to determine energy efficiency: A.
A variable speed drive is integrated within the fan.
Peak Amps @ 400V / 3PH / 50Hz.
The overall A-weighted sound pressure level is at a distance of 3m with spherical free-field propagation. It is expressed in dB re-20μPa and is presented for comparative purposes only.

RAPTOR SPA

Sound Data

AC

Single Phase 220V to 240V / 50Hz

Product Code		Sound Power Level dBW @ Octave Band Hz								Total dB
		63Hz	125Hz	250Hz	500Hz	1kHz	2kHz	4kHz	8kHz	
SPA250/2-1AC	Inlet	58	61	67	66	64	67	63	58	73
	Outlet	58	61	67	66	64	67	63	58	73
SPA250/4-1AC	Inlet	52	59	53	53	52	53	49	42	63
	Outlet	51	61	52	52	53	53	48	41	63
SPA315/4-1AC	Inlet	60	67	62	61	59	58	55	48	70
	Outlet	59	67	63	61	59	59	55	48	70
SPA350/4-1AC	Inlet	65	65	58	54	56	55	49	41	69
	Outlet	63	67	64	60	54	56	49	41	70
SPA400/4-1AC	Inlet	66	69	65	62	64	63	58	53	73
	Outlet	65	69	66	64	65	63	58	51	74
SPA450/4-1AC	Inlet	62	71	70	64	64	64	60	53	75
	Outlet	66	71	69	65	64	63	58	53	75
SPA450/6-1AC	Inlet	55	62	59	56	58	57	51	43	66
	Outlet	56	61	59	57	57	56	49	43	66
SPA500/4-1AC	Inlet	63	73	66	62	66	68	61	52	76
	Outlet	65	74	68	64	66	66	60	52	77
SPA500/6-1AC	Inlet	60	71	68	56	59	59	53	46	73
	Outlet	61	71	67	57	60	58	51	45	73
SPA560/4-1AC	Inlet	73	76	80	76	79	78	74	67	86
	Outlet	73	76	80	76	79	78	74	67	86
SPA560/6-1AC	Inlet	65	72	66	66	70	67	61	52	76
	Outlet	65	72	66	66	70	67	61	52	76
SPA630/6-1AC	Inlet	62	67	67	66	65	65	49	52	73
	Outlet	63	68	68	68	67	62	58	52	75

Data provided at standard air density of 1.2 kg/m³.
Tests and preparation of the sound data have been carried out in accordance with BS 848 Part 2:1985 at 50% peak pressure.
The Sound Power Level Spectra are in dB re-1pW.

Elta Limited has a policy of continuous product development and improvement and therefore reserves the right to supply products which may differ from those illustrated and described in this publication.
Confirmation of dimensions and data will be supplied on request.

RAPTOR SPA

Sound Data

AC

Three Phase 380V to 415V / 50Hz

Product Code	Speed r/min		Sound Power Level dBW @ Octave Band Hz								Total dB
			63Hz	125Hz	250Hz	500Hz	1kHz	2kHz	4kHz	8kHz	
SPA400/46-3AC	1372	Inlet	65	71	64	63	64	63	59	53	74
		Outlet	64	71	65	63	65	64	59	51	74
	1105	Inlet	61	66	60	60	61	60	55	48	70
		Outlet	59	65	61	61	62	60	54	46	70
SPA450/46-3AC	1354	Inlet	61	70	64	64	65	65	60	53	74
		Outlet	67	70	67	65	64	64	59	53	75
	1016	Inlet	59	65	58	63	60	60	54	47	69
		Outlet	63	64	60	64	60	59	53	46	70
SPA500/46-3AC	1342	Inlet	63	73	66	67	68	68	64	56	77
		Outlet	65	73	68	71	68	66	63	55	77
	960	Inlet	59	68	71	62	62	62	55	48	74
		Outlet	59	67	70	65	62	60	53	48	73
SPA560/46-3AC	1293	Inlet	70	77	72	72	73	72	69	62	81
		Outlet	70	77	72	72	73	72	69	62	81
	995	Inlet	70	71	66	66	67	66	61	53	76
		Outlet	70	71	66	66	67	66	61	53	76
SPA630/46-3AC	1327	Inlet	76	88	80	82	83	83	78	70	92
		Outlet	76	88	80	82	83	83	78	70	92
	919	Inlet	79	78	77	75	76	73	68	60	85
		Outlet	79	78	77	75	76	73	68	60	85
SPA630/68-3AC	903	Inlet	61	63	63	65	65	65	59	52	72
		Outlet	61	65	63	65	65	63	59	52	72
	725	Inlet	64	60	59	64	62	62	54	47	70
		Outlet	64	60	59	59	61	60	53	47	69
SPA710/46-3AC	1358	Inlet	72	81	76	74	76	75	72	67	85
		Outlet	74	80	78	75	76	74	71	67	85
	1091	Inlet	67	74	71	70	71	70	66	62	79
		Outlet	70	74	72	70	71	68	65	61	79
SPA710/68-3AC	899	Inlet	63	67	65	64	65	64	59	52	73
		Outlet	65	68	67	65	64	63	58	52	74
	676	Inlet	68	61	61	63	62	60	52	45	71
		Outlet	70	62	61	66	60	57	50	45	73

Data provided at standard air density of 1.2 kg/m³.
Tests and preparation of the sound data have been carried out in accordance with BS 848 Part 2:1985 at 50% peak pressure.
The Sound Power Level Spectra are in dB re-1pW.

Tel **01384 275800** Fax **01384 275810** Email **info@eltauk.com** Website **eltauk.com**

RAPTOR SPA

Sound Data

EC

Single Phase 220V to 277V / 50Hz or 60Hz

Product Code	Control Voltage V		Sound Power Level dBW @ Octave Band Hz								Total dB
			63Hz	125Hz	250Hz	500Hz	1kHz	2kHz	4kHz	8kHz	
SPA350/4-1EC	10	Inlet	70	70	69	69	72	73	68	65	79
		Outlet	69	69	72	70	73	73	68	64	80
	8	Inlet	67	67	65	64	67	68	62	59	75
		Outlet	66	66	68	65	68	68	62	58	75
	5	Inlet	60	56	54	53	57	55	48	45	64
		Outlet	59	55	57	54	58	55	48	44	65
SPA400/4-1EC	10	Inlet	72	69	67	68	73	73	72	67	80
		Outlet	71	69	69	69	73	73	71	67	80
	8	Inlet	68	67	63	63	67	68	67	60	75
		Outlet	66	67	64	64	67	67	66	60	75
	5	Inlet	58	54	53	52	55	57	53	45	64
		Outlet	57	53	54	53	55	57	52	44	63
SPA450/4-1EC	10	Inlet	78	76	76	69	70	68	63	57	82
		Outlet	76	75	78	70	70	68	63	57	82
	8	Inlet	75	73	72	64	65	63	57	51	79
		Outlet	73	72	74	65	65	63	57	51	78
	5	Inlet	68	62	61	53	55	50	43	37	70
		Outlet	66	61	63	54	55	50	43	37	69
SPA500/4-1EC	10	Inlet	77	78	71	70	73	71	66	60	82
		Outlet	77	82	75	71	72	69	65	60	84
	8	Inlet	74	76	65	65	67	66	60	54	79
		Outlet	72	76	69	66	67	64	59	54	79
	5	Inlet	69	64	56	55	57	54	47	38	71
		Outlet	68	63	57	56	57	53	45	38	70
SPA630/4-1EC	10	Inlet	73	71	69	65	69	68	62	56	78
		Outlet	73	71	70	66	68	65	60	55	78
	8	Inlet	74	67	64	62	66	64	56	50	76
		Outlet	75	67	65	62	65	63	55	50	77
	5	Inlet	67	60	56	54	59	50	41	34	69
		Outlet	68	60	57	53	59	48	40	34	69
SPA710/6-1EC	10	Inlet	79	70	71	66	67	65	59	53	81
		Outlet	79	70	71	67	67	64	59	54	81
	8	Inlet	74	70	65	61	62	59	53	47	76
		Outlet	74	69	65	62	62	58	53	48	76
	5	Inlet	68	57	53	49	49	45	38	31	69
		Outlet	68	56	53	50	50	44	38	32	69

Data provided at standard air density of 1.2 kg/m³.
Tests and preparation of the sound data have been carried out in accordance with BS 848 Part 2:1985 at 50% peak pressure.
The Sound Power Level Spectra are in dB re-1pW.

Elta Limited has a policy of continuous product development and improvement and therefore reserves the right to supply products which may differ from those illustrated and described in this publication.
Confirmation of dimensions and data will be supplied on request.

RAPTOR SPA

Sound Data

EC

Three Phase 380V to 480V / 50Hz or 60Hz

Product Code	Control Voltage V		Sound Power Level dBW @ Octave Band Hz								Total dB
			63Hz	125Hz	250Hz	500Hz	1kHz	2kHz	4kHz	8kHz	
SPA500/4-3EC	10	Inlet	77	76	74	71	75	73	68	62	83
		Outlet	77	78	78	73	74	71	67	62	84
	8	Inlet	74	74	67	66	69	67	62	56	79
		Outlet	74	77	71	67	68	66	61	56	80
	5	Inlet	72	63	57	57	59	56	49	41	73
		Outlet	71	64	59	58	59	55	47	41	72
SPA630/4-3EC	10	Inlet	75	73	74	69	72	71	65	59	81
		Outlet	76	74	75	69	70	68	64	59	81
	8	Inlet	74	76	71	65	70	67	60	54	80
		Outlet	75	75	71	65	69	64	58	54	80
	5	Inlet	65	61	58	57	61	54	46	38	69
		Outlet	66	61	58	56	62	52	44	37	69
SPA710/6-3EC	10	Inlet	86	71	76	70	69	67	62	56	87
		Outlet	85	72	75	70	69	66	62	57	86
	8	Inlet	72	69	70	64	64	61	56	50	76
		Outlet	72	69	70	65	64	60	56	51	76
	5	Inlet	61	59	56	52	51	47	40	33	64
		Outlet	62	59	58	54	52	46	41	34	65

Data provided at standard air density of 1.2 kg/m³.
Tests and preparation of the sound data have been carried out in accordance with BS 848 Part 2:1985 at 50% peak pressure.
The Sound Power Level Spectra are in dB re-1pW.

Tel **01384 275800** Fax **01384 275810** Email **info@eltauk.com** Website **eltauk.com**

RAPTOR SPA

Dimensional Data

AC EC

Single & Three Phase

Product Code	A	B	C	D	E	F	G	H	J	K	Weight kg
SPA250/2-1AC	254	257	276	370	320	43	48	6	24	7	5
SPA250/4-1AC	254	257	276	370	320	43	48	6	19	7	5
SPA315/4-1AC	317	329	365	430	380	18	71	11	13	9	7
SPA350/4-1AC	358	370	400	485	435	51	74	12	9	9	8
SPA350/4-1EC	358	370	400	485	435	79	74	12	-3	9	9
SPA400/4-1AC	400	412	450	540	490	56	95	15	-	10	10
SPA400/4-1EC	400	412	450	540	490	56	95	15	-8	10	10
SPA400/46-3AC	400	412	450	540	490	56	95	15	-	10	9
SPA450/4-1AC	450	462	500	575	535	20	95	15	51	10	16
SPA450/4-1EC	450	462	500	575	535	56	95	15	4	10	10
SPA450/46-3AC	450	462	500	575	535	20	95	15	31	10	14
SPA450/6-1AC	450	462	500	575	535	20	95	15	31	10	14
SPA500/4-1AC	504	517	584	655	615	63	104	16	37	11	21
SPA500/4-1EC	504	517	584	655	615	88	104	16	-9	11	17
SPA500/4-3EC	504	517	584	655	615	88	104	16	-9	11	17
SPA500/46-3AC	504	517	584	655	615	63	104	16	38	11	21
SPA500/6-1AC	504	517	584	655	615	63	104	16	18	11	20
SPA560/4-1AC	560	577	620	725	670	60	100	15	66	10	28
SPA560/46-3AC	560	577	620	725	670	60	100	15	64	10	24
SPA560/6-1AC	560	577	620	725	670	60	100	15	44	10	22
SPA630/4-1EC	635	648	728	805	750	71	130	20	6	11	27
SPA630/4-3EC	635	648	728	805	750	71	130	20	6	11	27
SPA630/46-3AC	635	648	728	805	750	80	130	20	53	11	39
SPA630/6-1AC	635	648	728	805	750	60	130	20	25	11	26
SPA630/68-3AC	635	648	728	805	750	60	130	20	25	11	26
SPA710/46-3AC	711	715	799	850	810	71	150	20	38	15	40
SPA710/6-1EC	711	715	799	850	810	71	150	20	-17	15	29
SPA710/6-3EC	711	715	799	850	810	71	150	20	-17	15	29
SPA710/68-3AC	711	715	799	850	810	71	150	20	-	15	34

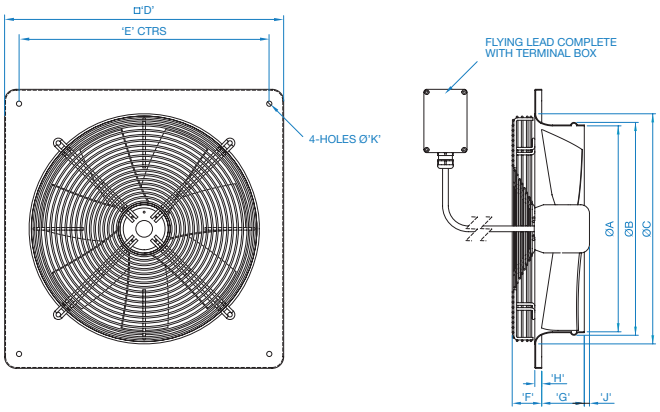

Dimensions are in mm.

Elta Limited has a policy of continuous product development and improvement and therefore reserves the right to supply products which may differ from those illustrated and described in this publication.
Confirmation of dimensions and data will be supplied on request.

RAPTOR SPA

Accessories

AC

Single Phase

Product Code	AC Electronic Controller	Louvre Shutter	Transformer Controller	Wall Cowl	Wiring Diagram
SPA250/2-1AC	149-EL31	064-0250-C	149-TC12	SWC25/31	152-177
SPA250/4-1AC	149-EL31	064-0250-C	149-TC12	SWC25/31	152-177
SPA315/4-1AC	149-EL31	064-0315-C	149-TC12	SWC25/31	152-177
SPA350/4-1AC	-	064-0350-C	149-TC12	SWC35/40	152-177
SPA400/4-1AC	149-EL31TK	064-0400-C	149-TC14	SWC35/40	152-104B
SPA450/4-1AC	149-EL61TK	064-0450-C	149-TC18	SWC45/50	152-104B
SPA450/6-1AC	149-EL31TK	064-0450-C	149-TC14	SWC45/50	152-104B
SPA500/4-1AC	149-EL61TK	064-0500-C	149-TC18	SWC45/50	152-104B
SPA500/6-1AC	149-EL31TK	064-0500-C	149-TC12	SWC56/63	152-104B
SPA560/4-1AC	-	064-0560-C	149-TC110	SWC56/63	152-104B
SPA560/6-1AC	149-EL61TK	064-0560-C	149-TC14	SWC56/63	152-104B
SPA630/6-1AC	149-EL61TK	064-0630-C	149-TC18	SWC56/63	152-104B

Three Phase

Product Code	Louvre Shutter	Transformer Controller	Wall Cowl	Wiring Diagram
SPA400/46-3AC	064-0400-C	149-TC33	SWC35/40	152-108
SPA450/46-3AC	064-0450-C	149-TC33	SWC45/50	152-108
SPA500/46-3AC	064-0500-C	149-TC33	SWC45/50	152-108
SPA560/46-3AC	064-0560-C	149-TC33	SWC56/63	152-108
SPA630/46-3AC	064-0630-C	149-TC310	SWC56/63	152-108
SPA630/68-3AC	064-0630-C	149-TC33	SWC56/63	152-108
SPA710/46-3AC	064-0710-C	149-TC310	-	152-108
SPA710/68-3AC	064-0710-C	149-TC33	-	152-108

Tel **01384 275800** Fax **01384 275810** Email **info@eltauk.com** Website **eltauk.com**

RAPTOR SPA

Accessories

EC

Single Phase

Product Code	EC Electronic Controller	Louvre Shutter	Wall Cowl	Wiring Diagram
SPA350/4-1EC	149-POT-10-MI	064-0350-C	SWC35/40	152-00044
SPA400/4-1EC	149-POT-10-MI	064-0400-C	SWC35/40	152-00298951
SPA450/4-1EC	149-POT-10-MI	064-0450-C	SWC35/40	152-00044
SPA500/4-1EC	149-POT-10-MI	064-0500-C	SWC45/50	152-MOEA03K1
SPA630/4-1EC	149-POT-10-MI	064-0630-C	SWC56/63	152-MOEA03K1
SPA710/6-1EC	149-POT-10-MI	064-0710-C	-	152-MOEA03K1

Three Phase

Product Code	EC Electronic Controller	Louvre Shutter	Wall Cowl	Wiring Diagram
SPA500/4-3EC	149-POT-10-MI	064-0500-C	SWC45/50	152-MOEA03K3
SPA630/4-3EC	149-POT-10-MI	064-0630-C	SWC56/63	152-MOEA03K3
SPA710/6-3EC	149-POT-10-MI	064-0710-C	-	152-MOEA03K3

Elta Limited has a policy of continuous product development and improvement and therefore reserves the right to supply products which may differ from those illustrated and described in this publication.
Confirmation of dimensions and data will be supplied on request.

RAPTOR SPA

Notes

Tel **01384 275800** Fax **01384 275810** Email **info@eltauk.com** Website **eltauk.com**

RAPTOR SPA

Notes

Elta Limited has a policy of continuous product development and improvement and therefore reserves the right to supply products which may differ from those illustrated and described in this publication.
Confirmation of dimensions and data will be supplied on request.

ELTA

Tel **+44 (0) 1384 275800**
Email **info@eltauk.com**
eltauk.com

SPA-03-2023 Issue C

bsi.
UKAS MANAGEMENT SYSTEMS 0003
BS EN ISO 9001:2015 FM 556465

A member of HEVAC ASSOCIATION

CIBSE PATRONS

A MEMBER OF eg ELTA GROUP