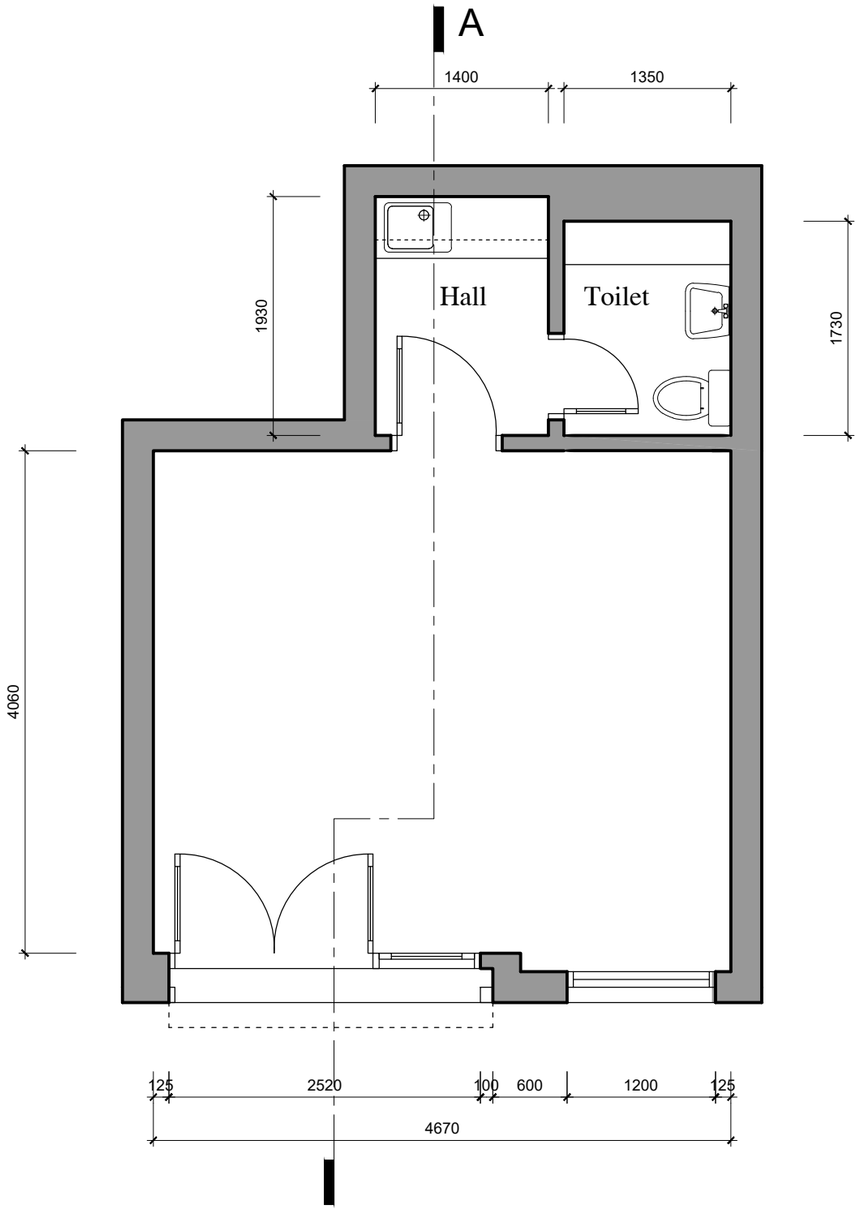

LAYOUT

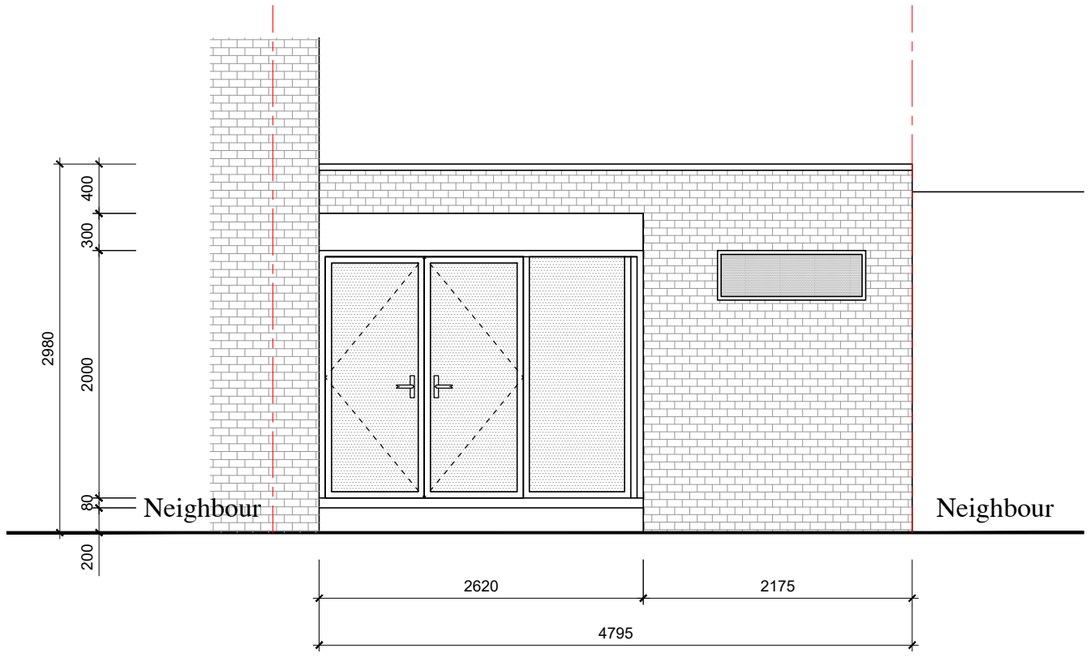

SHOPFRONT

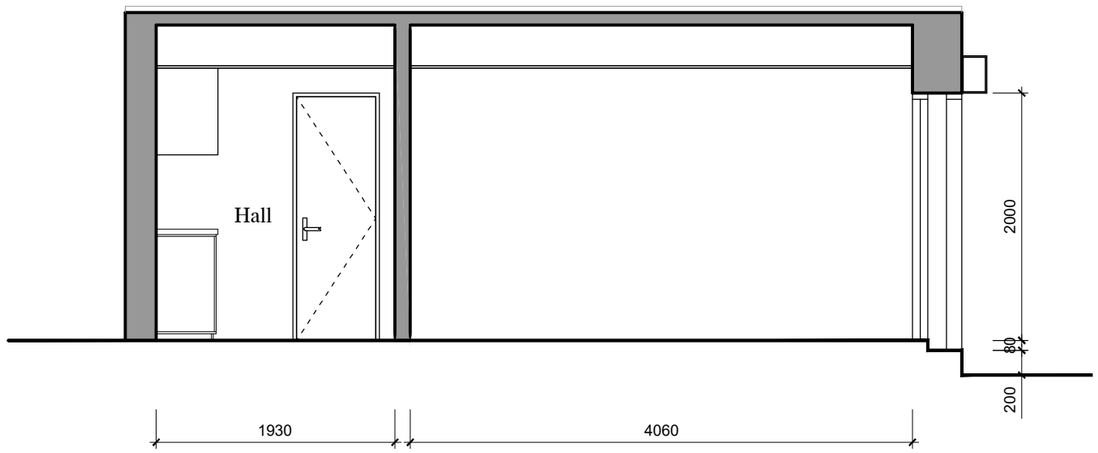

SECTION A

0 3 Metres

Title **Existing Floor Plan & Elevation**	Date November 2025	Drawn by HT	EVER Interiors Ltd 124 City Road, London, EC1V 2NX Website: https://www.everinteriors.com Contact: 0777 0180 999
	Scale 1 / 50 (A3)		
Project **Nails Beauty - 153B Caversham Rd Reading RG1 8AU**	Drawing No **A - 01**	Rev.	

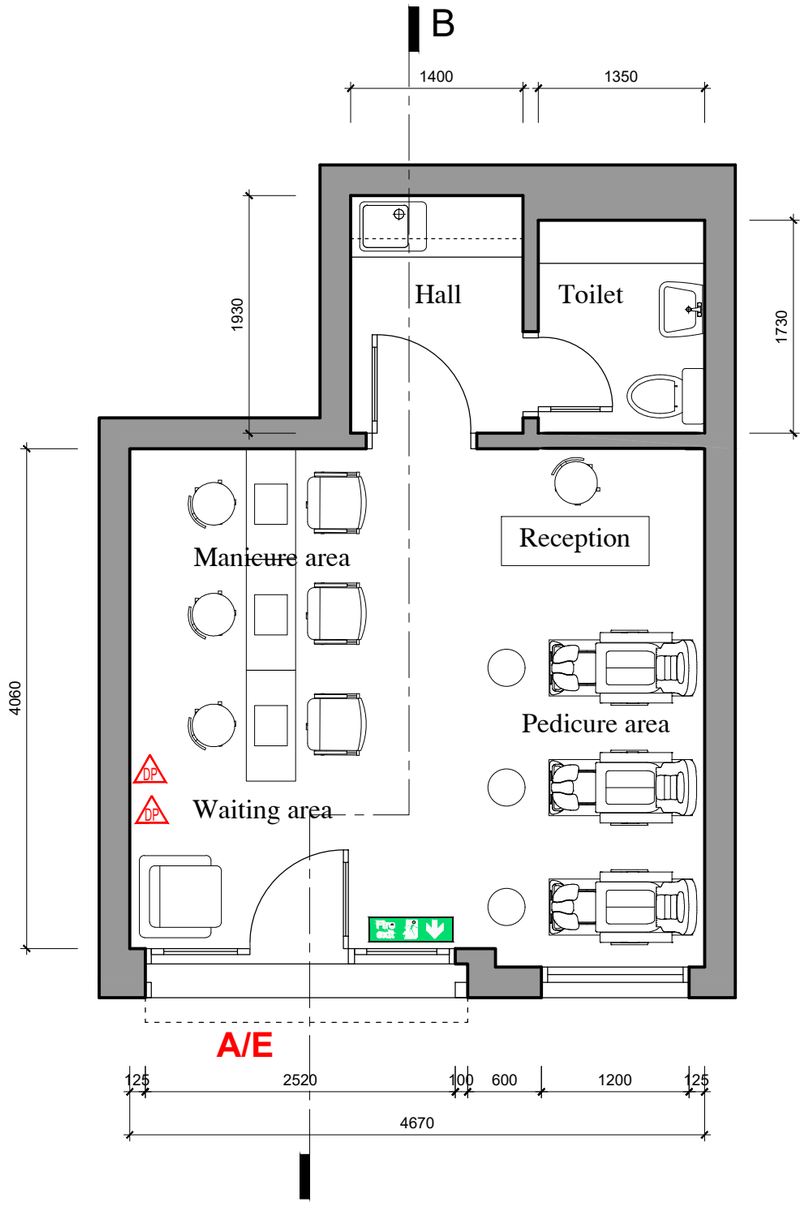

LAYOUT

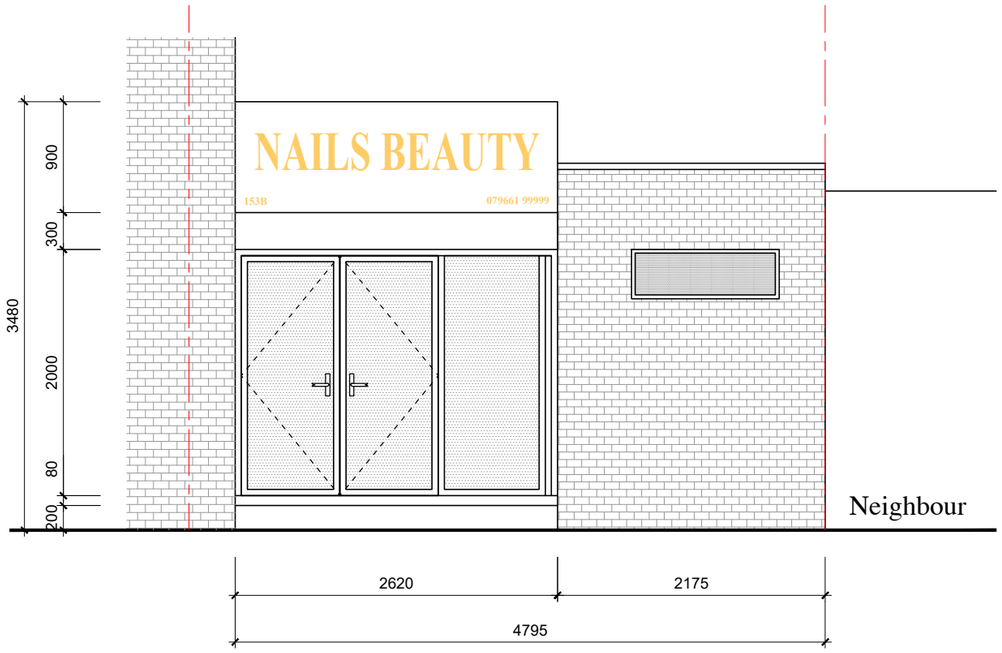

SHOPFRONT

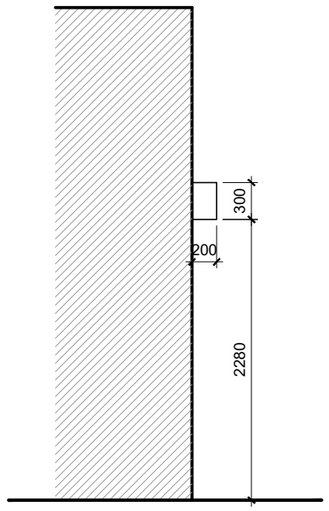

LEFT SIDE

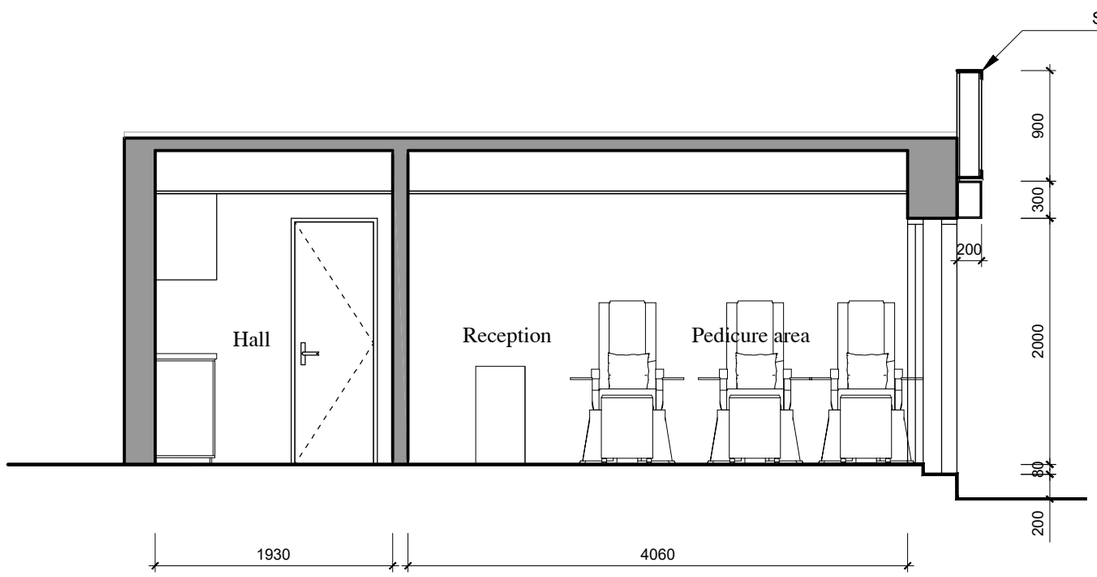

SECTION B

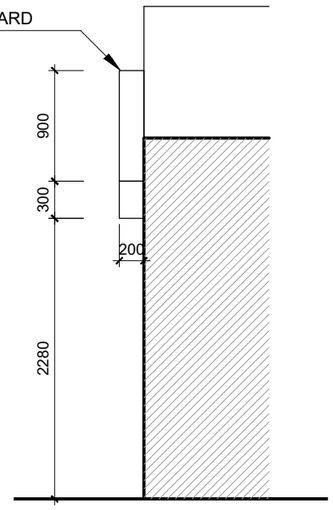

RIGHT SIDE

KEY	
A / E	Access and Egress
DP	Dry powder
Fire exit	Emergency exit

0 — 3 Metres

Title **Proposed Floor Plan & Elevation**	Date November 2025	Drawn by HT	EVER Interiors Ltd 124 City Road, London, EC1V 2NX Website: https://www.everinteriors.com Contact: 0777 0180 999
	Scale 1 / 50 (A3)		
Project **Nails Beauty - 153B Caversham Rd Reading RG1 8AU**	Drawing No **A - 02**	Rev.	

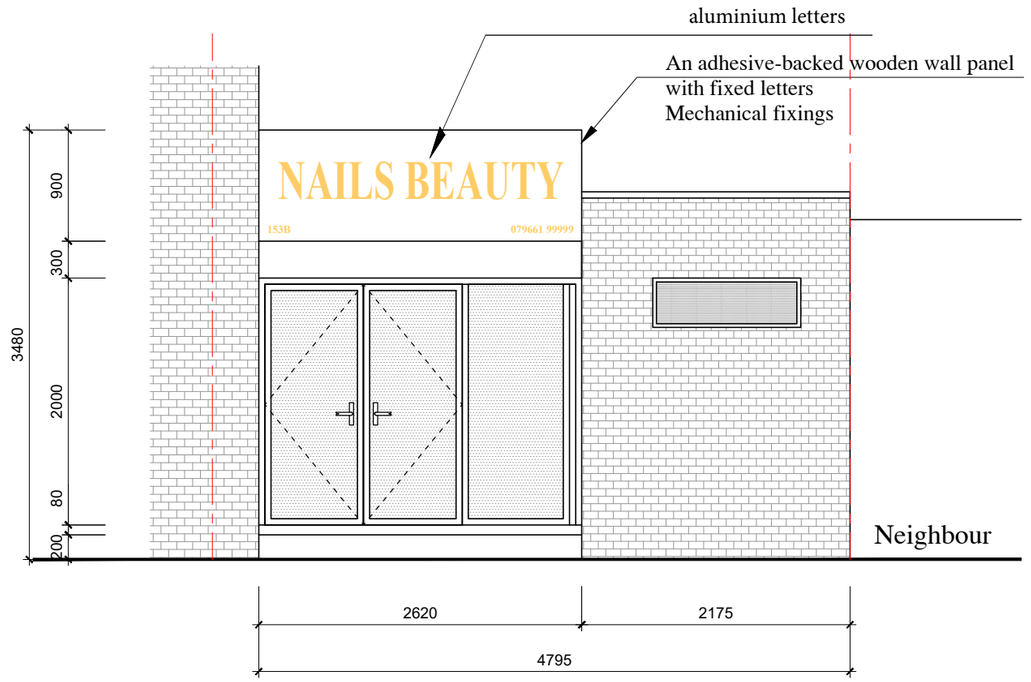

ELEVATION

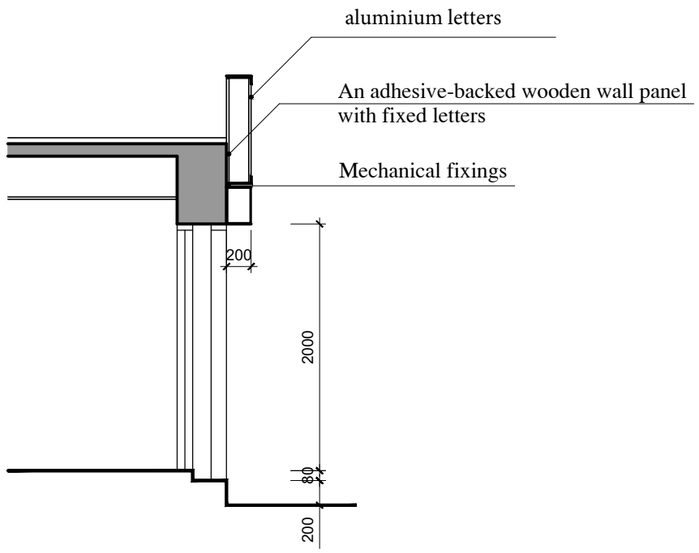

SECTION

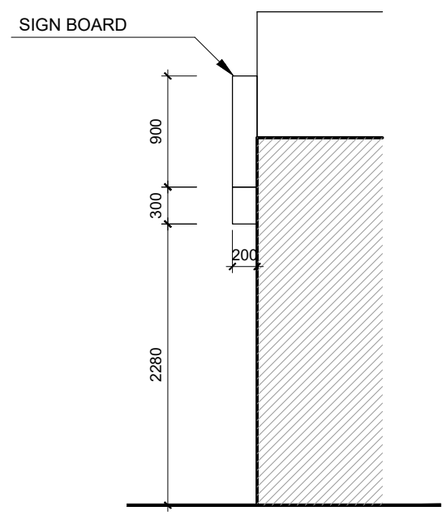

RIGHT SIDE

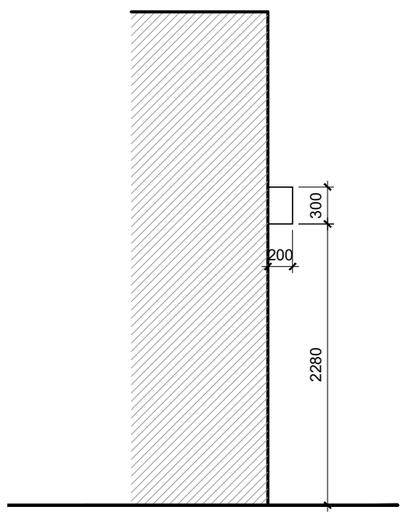

LEFT SIDE

Title	Date	Drawn by	
Sign Application	November 2025	HT	
	Scale 1 / 50 (A3)		
Project	Drawing No		Rev.
Nails Beauty - 153B Caversham Rd Reading RG1 8AU	**A - 03**		

EVER Interiors Ltd
124 City Road, London, EC1V 2NX
Website: https://www.everinteriors.com
Contact: 0777 0180 999