SJ Stephens Associates

ARBORICULTURAL, LANDSCAPE & MANAGEMENT CONSULTANTS

Savernake Barn
Stokke Common
Great Bedwyn
Marlborough
Wiltshire SN8 3LL
Tel: 01672 871 862
www.sjstephens.co.uk
e: info@sjstephens.co.uk

Arboricultural Impact Assessment

- Tree Survey
- Tree Protection Plan
- Arboricultural Method Statement

For:-

New dwelling with associated access, parking and landscaping

At:-

8 Water Road
Reading
RG30 2NN

On behalf of:-

Muhammad Yousaf
10 Water Road
Reading
RG30 2NN

Prepared by:

Catherine Fforde, HND Hort,
Dip Arb L4(ABC), MCIHort, MArborA
Email: catherine@sjstephens.co.uk

Approved by:

Simon Stephens MA Oxon, Dip Arb(RFS), MArborA, C Env. MICFor
Email: simon@sjstephens.co.uk

Survey Date: 20th March 2025
Report Date: 12th September 2025
Project no: 2444

CONTENTS

1 BACKGROUND
2 SURVEY DETAILS AND SCOPE
3 SURVEY LIMITATIONS
4 LEGAL PROTECTION OF TREES
5 ARBORICULTURAL METHOD STATEMENT
6 ARBORICULTURAL IMPACT ASSESSMENT
7 REFERENCES

Appendices
A Tree Protection Plan: drawing no: 2444-01 Rev A
B Tree Schedule
C BS 5837:2012 - Trees in relation to design, demolition and construction, Table 1
D Tree Protection Fencing Detail
E Site photos
F Proposed Site Plan

1 BACKGROUND

1.1 This Arboricultural Impact Assessment has been instructed by Colony Architects on behalf of Muhammad Yousaf specify tree protection measures and to assess the arboricultural impact of the proposed new dwelling with associated access, parking and landscaping at 8 Water Road.

1.2 Trees were surveyed, with findings shown in the Tree Schedule in Appendix B and plotted on the Tree Protection Plan in Appendix A. This also shows tree protection measures, which are specified in the Arboricultural Method Statement in section 5 below. The arboricultural impact is assessed in section 6, which assumes that these measures are followed.

1.3 The tree survey was undertaken, and this report has been prepared, by Catherine Fforde HND Hort, Dip Arb L4(ABC), MCIHort, MArborA and approved by Simon Stephens MA Oxon, Dip Arb (RFS), MArborA, C Env, MICFor a Registered Consultant with the Arboricultural Association, with over 20 years relevant experience.

1.4 This survey and report have been prepared in accordance with the recommendations of BS 5837:2012, Trees in relation to design, demolition and construction - Recommendations.

1.5 Documentation supplied:

- Colony Architects, Existing Site Plan: drawing no: 456 02-00
- Colony Architects, Proposed Site Plan: drawing no: 456 02-10

2 SURVEY DETAILS AND SCOPE

2.1 The site survey included trees and shrubs which could be affected by the proposals, with a stem diameter over 75mm at 1.5m height, as shown located on the Tree Protection Plan, included as Appendix A.

2.2 Tree inspection took place from ground level with the use of binoculars, sounding hammer and metal probe using the Visual Tree Assessment method (Mattheck & Breloer 1994). The presence and condition of bark and stem wounds, cavities, decay, fungal fruiting bodies and any structural defects that could increase the risk of structural failure were noted.

2.3 Tree diameters were measured using a girthing tape and tree heights were measured using a hypsometer. Where use of a tape was restricted by site factors, diameters were estimated, with the diameter recorded in the tree schedule preceded by the word "est".

2.4 At the time of the survey, the weather was fine with no restrictions to visibility. Broadleaf trees were not in leaf. In places, dense undergrowth restricted access/dense ivy restricted visibility of tree stems.

2.5 The suitability of trees for inclusion in the future development was considered, in particular considering the safe useful life expectancy, and sustainability, of trees on the site after development is completed.

2.6 Tree details are shown on the Tree Protection Plan included as Appendix A. Tree locations have been determined by measuring distances from features shown on the plan, using a laser measuring device. The following information was recorded for each tree, and is shown in the Tree Schedule included as Appendix B:

- **Number:** an identity number for each tree, prefixed with a "T", which cross references locations shown on the plan with the schedule in Appendix B. Where a number of trees are located close together and are similar in character and management requirements, they have been treated as a Group under a single number, prefixed with a "G".
- **Species**: common name.
- **Tree height**: approximate height in metres.
- **Stem diameter**: diameter in millimetres, taken at 1.5m above ground. Where there are a number of stems, stem diameters are recorded in the condition column.
- **Branch spread**: approximate spread in metres to N,S,E and W of the trunk. The approximate branch spread is drawn on the plan.
- **Canopy clearance**: approximate height of the canopy above ground. Where a significant, low lateral branch is present, its height and direction of growth is included in the Condition column.
- **Age class**: Young, Semi-mature, Early mature, Mature, Over-mature, Veteran.
- **Condition**: features that affect the safe useful life expectancy and amenity of the tree, including the presence of decay or any physical defect.

- **Management Recommendations**: recommendations to ensure the health and safety of the tree, within the future development.
- **Estimated Remaining Contribution**: <10 years, 5-15 years, 10-20 years, 15-30 years, 20-40 years, >40 years.
- **Category grading**: tree classification taken from BS 5837:2012, Trees in relation to design, demolition and construction (see Appendix C for details), as follows:
    - Category U: Unsuitable for retention, trees with less than 10 years life expectancy, normally recommended for removal (Red)
    - Category A: high quality trees, able to make a substantial contribution for at least 40 years, normally retained unless there is an over-riding reason for removal and appropriate mitigation. (Green)
    - Category B: moderate quality trees, able to make a significant contribution for at least 20 years, normally retained. (Blue)
    - Category B/C: an intermediate category between categories B and C (not specifically described in BS5837). Trees, which should be retained wherever possible, providing retention does not unreasonably constrain the layout. (Blue)
    - Category C: low quality, in adequate condition to remain for at least 10 years, or young trees <150mm stem diameter. Trees which can be removed to allow the desired layout or new planting. (Grey)

  For category A, B and C trees, a subcategory has been allocated, providing information on the reasons for selection of a specific category, as follows:
    - Subcategory 1: mainly arboricultural values.
    - Subcategory 2: mainly landscape values.
    - Subcategory 3: mainly cultural values, including conservation.
- Trees have been classified irrespective of the possible proximity to future construction. The BS 5837 category is colour coded, as indicated above, on the plan included as Appendix A.
- **Protection Distance:** the protection distance in metres required to provide the Root Protection Area recommended in BS 5837, assuming a circular area centred on the tree.
- **Root Protection Area (RPA):** the area in m^2, as recommended in BS 5837, to provide sufficient rooting area to ensure tree survival and which, in most situations, should be fenced off to prevent root damage from construction activities.

3 SURVEY LIMITATIONS

3.1 No internal decay devices, or other invasive tools to assess tree condition, were used.

3.2 No soil excavation or root inspection was carried out.

3.3 This survey has not considered the effect that trees or vegetation may have on the structural integrity of future building through subsidence or heave.

3.4 The tree survey has been undertaken for planning purposes. Although any obvious structural defects have been noted, a Tree Hazard Assessment has not been carried out. Mature trees close to highly populated areas or public highways should normally be checked for safety annually, by a suitably qualified person.

4 LEGAL PROTECTION OF TREES

4.1 Reading Borough Council confirmed by email on 31.03.25 that there are no Tree Preservation Orders at 8 Water Road. There is a TPO on two trees within 6 Water Road however these are not within influencing distance of the proposed development. The site is not within a Conservation Area. The presence of Planning Conditions currently attached to the site, was not checked.

5 ARBORICULTURAL METHOD STATEMENT

5.1 Site Overview

5.1.1 The proposal is for a new dwelling with associated access, parking and landscaping on land at 8 Water Road. The proposed site plan is included as Appendix F and has been added to the survey drawing, along with tree details, to create the Tree Protection Plan attached as Appendix A.

5.1.2 The site is an area of the garden at 8 Water Road. This area appears to have been separated off from the garden area immediately around the existing dwelling some time ago by a hedge and fencing. Currently access is via the garden of 10 Water Road.

5.1.3 Although in current usage as a garden there is no sign of recent management of trees and shrubs. A small part of one hedge has been cut back however elsewhere hedges have grown out and are beyond restoration.

5.1.4 There are many fruiting trees (G9) however these are of poor form and structure due to a lack of formative and management pruning. There are some which are dead and some with dead and decaying parts.

5.1.5 The proposal also includes alterations to parking for the existing dwelling and slight widening of the access road off the highway which serves both 8 and 10 Water Road.

5.1.6 There are a number of coniferous trees alongside the access road. Google Street View images show that these were previously maintained as hedges. These are now grown out and have had lower branches but back leaving bare stems. Elsewhere, there are self set trees which are unsustainable due to their proximity to built structures, as physical damage will occur if they are not removed.

5.1.7 Photos are included in Appendix E.

5.2 Tree Work

5.2.1 Details of proposed tree works are included in the Tree Schedule included as Appendix B.

5.2.2 Four trees and five tree groups are proposed for removal, as detailed in section 6.1 below.

5.2.3 All tree work must be undertaken to the standards set out in BS 3998:2010 Tree work – Recommendations.

5.3 Root Protection Areas

5.3.1 Root Protection Areas are shown for all trees in the Tree Schedule included as Appendix B. They are also shown for all retained trees, as circular areas centred on the trunk, on the Tree Protection Plan included as Appendix A. Where there are physical obstructions to root growth the Root Protection Area should be shown as an equivalent area that is more likely to reflect actual root growth. The Root Protection Area shows the area around a tree in which all construction activity must normally be excluded, unless appropriate protection measures are implemented.

5.4 Tree Protection Fencing

5.4.1 Tree Protection Fencing must be erected where shown on the Tree Protection Plan, included as Appendix A. This will provide full protection of the Root Protection Areas of all retained trees within the site, other than for:

- areas hatched in blue on the Tree Protection Plan, where No-Dig Construction must be used, as described in section 5.5 below, to protect underlying roots.
- areas shaded cyan on the Tree Protection Plan, indicating Ground Protection Areas, where roots must be protected, as described in section 5.6 below.

5.4.2 Tree works can be completed before Tree Protection Fencing is erected, however no contractors plant or vehicles must be allowed to track within the Root Protection Areas unless working from areas of existing hard surfacing or ground protection panels are laid over soft surface areas.

5.4.3 Tree Protection Fencing must be from weldmesh panels, at least 2m high, securely fixed, with wire or scaffold clamps, to a rigid framework. This framework must be constructed from scaffold tubes with vertical tubes, at a maximum interval of 3m and driven into the ground at least 0.6m. The structure must be well braced to resist impacts, constructed as per Figure 2 of BS5837:2012, which is reproduced in Appendix D. Alternatively, weldmesh panels can be supported on blocks, providing the blocks are pinned to the ground with road pins, or similar, and the panels are braced, as per Figure 3 of BS5837:2012, which is also reproduced in Appendix D.

5.4.4 After erection of Tree Protection Fencing and installation of ground protection, two days' notice must be given to the local planning authority before demolition or construction, including any ground work, starts on site.

5.4.5 Tree Protection Fencing must be maintained and retained for the duration of the works, or until such time as agreed in writing with the local planning authority.

5.4.6 Weatherproof notices must be fixed to the Tree Protection Fencing, and maintained, stating:-

TREE PROTECTION AREA
KEEP OUT
TREES ENCLOSED BY THIS FENCE ARE PROTECTED BY PLANNING CONDITIONS
CONTRAVENTION MAY LEAD TO CRIMINAL PROSECUTION
THE FOLLOWING MUST BE OBSERVED BY ALL PERSONS:

- The Protection Fence must not be moved
- No person or machine must enter the area
- No materials or spoil must be deposited
- No excavation must be permitted

ANY INCURSION INTO THE PROTECTED AREA MUST BE WITH THE WRITTEN PERMISSION OF THE LOCAL PLANNING AUTHORITY

5.5 No-Dig Construction Areas

5.5.1 The No-Dig Construction areas, are shown hatched blue on the Tree Protection Plan included as Appendix A. These cover areas within Root Protection Areas where:-

- existing hard surfacing is to be replaced by new hard surfacing
- new hard surfacing is to be constructed on existing soft areas

5.5.2 Where existing hard surfacing within the No-Dig areas are to be replaced by new hard surfacing, no excavation must be permitted beneath the existing sub-base. If existing sub-base remains, it can be used as a base for the new build up. If the existing sub-base is removed, engineering details for the new build must avoid localised compaction, using both a two dimensional geogrid, and a three dimensional cellular confinement system as integral components of the sub-base. As well as being fit for purpose, the design and methodology must protect tree roots, by ensuring the following:-

- following leveling with soil or sand, a permeable, non-woven geotextile membrane, must be laid.
- a suitable two dimensional geogrid, such the TriAx Geogrid supplied by Tensar International (www.tensar.co.uk), or the Biaxial Geogrid supplied by Geosynthetics Ltd (www.geosyn.co.uk), must be laid over the entire area and underneath the edging.
- Kerb stones must be laid on top of the geotextile and geogrid. If required steel reinforcing rods can be driven to provide additional anchorage for kerb stones.
- a suitable cellular confinement system must then be laid to manufacturers instructions on top of the geogrid. Products that might be considered include Geoweb, supplied by Greenfix (www.greenfix.co.uk) or Cellweb, supplied by Geosynthetics Ltd (www.geosyn.co.uk). The depth of the system must be adequate to take the maximum axle weight, as per manufacturers guidance.
- the cellular confinement system must be filled with clean (no fines), washed angular, 4/20mm, stone to provide load support, while allowing air and moisture to permeate to the root zone.

- a further permeable, non-woven geotextile membrane, such as TreetexT300, or an alternative approved product which has similar oil trapping qualities, must be laid over the cellular confinement system.
- a porous, surfacing material, free from contaminants, must then be laid. Either sand bedding and block paving, gravel or permeable tarmac would be suitable.
- removed turf/topsoil can be used to grade surrounding ground levels.

5.5.3 Where existing soft areas within No-Dig Construction areas are to be replaced by new hard surfacing, they must be constructed without excavation apart from the removal of turf/organic matter, which must be carried out by hand. Engineering details must avoid localised compaction, using both a two dimensional geogrid, and a three dimensional cellular confinement system as integral components of the sub-base. A typical section is shown on the Tree Protection Plan included as Appendix A. As well as being fit for purpose, the design and methodology must protect tree roots, by ensuring the following:-

- topsoil/turf can be removed carefully by hand to a maximum of 50mm, but less if roots are found nearer the surface.
- following leveling with soil or sand, a permeable, non-woven geotextile membrane, must be laid.
- a suitable two dimensional geogrid, such the TriAx Geogrid supplied by Tensar International (www.tensar.co.uk), or the Biaxial Geogrid supplied by Geosynthetics Ltd (www.geosyn.co.uk), must be laid over the entire area and underneath the edging.
- Kerb stones must be laid on top of the geotextile and geogrid. If required steel reinforcing rods can be driven to provide additional anchorage for kerb stones.
- a suitable cellular confinement system must then be laid to manufacturers instructions on top of the geogrid. Products that might be considered include Geoweb, supplied by Greenfix (www.greenfix.co.uk) or Cellweb, supplied by Geosynthetics Ltd (www.geosyn.co.uk). The depth of the system must be adequate to take the maximum axle weight, as per manufacturers guidance.
- the cellular confinement system must be filled with clean (no fines), washed angular, 4/20mm, stone to provide load support, while allowing air and moisture to permeate to the root zone.
- a further permeable, non-woven geotextile membrane, such as TreetexT300, or an alternative approved product which has similar oil trapping qualities, must be laid over the cellular confinement system.
- a porous, surfacing material, free from contaminants, must then be laid. Either sand bedding and block paving, gravel or permeable tarmac would be suitable.
- removed turf/topsoil can be used to grade surrounding ground levels.

5.5.4 Site traffic, including pedestrians, must not be allowed on the No-Dig areas unless roots are protected by existing hard surfacing, new No-Dig surfacing or unless suitable ground protection panels are laid. Either Maxitrack mats, as supplied by the Marwood Group, (www.marwoodgroup.co.uk) or Euro Mat or Pro Mat panels, from Ground Guards (www.ground-guards.co.uk), or a similar approved product, must be used, laid on top of a compressible layer of sand or woodchips, laid onto a geotextile. If access is only required for pedestrians, 25mm plywood or side butting scaffold boards can be laid, on top of a compressible layer of sand or woodchips, laid onto a geotextile.

5.5.5 Alternatively, the build up for the new No-Dig permeable surface can be used for construction traffic providing an adequate depth of cellular confinement system is used for the loads anticipated. In this case, the same section detail shown on the Tree Protection Plan must be used but with the sand and porous paving surface replaced with clean stone. This can then be removed together with the underlying geotextile at the end of the construction period and a new geotextile laid and final surface laid.

5.5.6 No-Dig construction will result in an increase in levels. This must be fully taken account of in all other aspects of the design.

5.6 Ground Protection Areas

5.6.1 The Ground Protection Areas, which are shaded cyan on the Tree Protection Plan, contain hard surfacing which is protecting any underlying roots and which must stay in place during the construction period unless further protection measures are implemented.

5.6.2 Hard surfacing in Ground Protection Areas can be replaced if the existing sub-base remains in place and if the new surfacing is permeable.

5.6.3 If the existing sub-base is removed, ground protection must be laid immediately and then No-Dig construction (as per section 5.5) used for the build up. No excavation must be permitted beneath the base course in these areas.

5.6.4 An excavator must only be used for the removal of the existing hard surfacing within the Root Protection Areas of T1, G12 and G14, if it can work only from areas of hard standing, or from outside the Root Protection Area. A banksman must be present during this operation and excavation must go no deeper than the existing base course and must cease immediately if roots are found.

5.6.5 New fencing is proposed across the Root Protection Area of T3. Where within the Root Protection Area shown on the Tree Protection Plan, post holes must be dug by hand. Heavy duty polythene must then be used to line holes before concrete is poured, to prevent the toxic effects of concrete on tree roots.

5.7 General measures

5.7.1 No construction activity whatsoever, including routing of underground services, storage of materials or on-site parking, must be allowed within Root Protection Areas, other than that specifically described above.

5.7.2 No mixing or storage of cement, concrete, oil, fuel, bitumen or other chemicals must be permitted within 10m of the trunk of any retained trees, nor in any position where the slope of the ground could lead to contamination of the Root Protection Area.

5.7.3 Fires must not be lit in a position where their flames could extend to within 10m of foliage, branches or trunk.

5.7.4 Landscape works carried out within Root Protection Areas must be undertaken with great care so as not to damage shallow roots. Tractor mounted rotovators or other heavy mechanical cultivation must not be used within the Root Protection Areas.

5.7.5 If any tree shown for retention is removed, uprooted or destroyed, another tree must be planted in the same location, at a size and species to be agreed in writing with the Local Planning Authority.

5.7.6 A copy of this report and the Tree Protection Plan must be kept on site and must be fully understood by the Site Agent.

5.8 Bat roosts

5.8.1 The current legislation makes it a criminal offence to disturb, damage or destroy any bat roost or hibernation area. Contractors must be reminded of their responsibilities and should contact the relevant authorities if any signs of bats are found.

5.9 Birds

5.9.1 The current legislation makes it a criminal offence to disturb nesting birds. The nesting season is generally assumed to be from 1st March to 31st July, however this can vary depending on species and location. During these months a careful inspection must be made before work commences and works must be postponed if active nests are found.

5.10 Arboricultural Supervision

5.10.1 A qualified Arboricultural Consultant must be retained during the period of construction to carry out the following:

- to meet with/ liaise with the contractor, prior to construction or demolition starting on site, to ensure this Arboricultural Method Statement is fully understood and can be complied with in full. If any revisions are required, a revised Arboricultural Method Statement must be approved by the local planning authority, prior to construction or demolition starting on site.

- as necessary, to inspect Tree Protection Fencing and ground protection, prior to construction or demolition starting on site.

- as necessary, to advise on any issues at the request of the local planning authority, the developer, architect or contractor.

The details of each site visit must be recorded using a site visit proforma, with copies circulated to the contractor, developer and the local authority tree officer within three working days of the visit.

6 ARBORICULTURAL IMPACT ASSESSMENT

6.1 The following trees / tree groups, categorized as per BS 5837 (see Appendix C for details), are proposed for removal:

- Category U – unsuitable for retention: Two trees – T5 and T13.
- Category C – low quality: Two trees – T7 and T8, and four tree groups – G2, G4, G6 and G9.

6.2 No trees or hedges of any merit are proposed for removal. A lack of recent maintenance and inappropriate pruning works have resulted in trees of poor form and structure; it is considered that they are beyond the stage of successful restoration. Although removal will result in an immediate loss of greening it will allow the opportunity for new soft landscaping which will be able to provide a more sustainable arboricultural landscape. A soft landscape plan can be conditioned to ensure that there is adequate mitigation for the removals.

6.3 Although preservation of Root Protection Areas is deemed to protect tree roots, in some cases buildings may need to be set further back to ensure the future sustainability of trees. If buildings are too close to trees, future occupiers may be likely to seek the reduction, or removal of trees, if they are cutting out excessive sunlight or providing a claustrophobic or threatening environment. Section 5.2.2 of BS 5837:2012 states that "an indication of potential direct obstruction of sunlight can be illustrated by plotting a segment with a radius from the centre of the stem equal to the height of the tree, drawn from due North West to due East, indicating the shadow pattern through the main part of the day." Shading patterns for key trees have been shown on the plan. This shows that the new dwelling is outside potential shading areas. There will be no large trees close enough to the new dwelling to produce a claustrophobic or threatening environment for future residents. Instead, retained trees will contribute to the amenity of the site and the screening of the property. The proposals will not therefore adversely affect the sustainability of retained trees.

6.4 Protection measures have been specified to protect the Root Protection Area of all retained trees. Provided the recommendations in this report are followed, the arboricultural impact of this development on existing tree cover is considered acceptable. Arboricultural supervision has been included to assist with tree protection measures.

7 REFERENCES

- *BS5837:2012 Trees in relation to design, demolition and construction – Recommendations.*
- *BS3998:2010 Tree Work. Recommendations.*
- *The use of Cellular Confinement systems near Trees: a guide to good practice Arboricultural Association Guidance Note 12.*

APPENDIX A

N
W E
S

Scale
0 5m 10m

55.7m

56.5m

Existing vegetation/ shrubs cut back/ replanted to create quality landscaping and screening

Rear garden = 200sqm

New trees and shrubs to boundary to create screening to/from neighbouring properties

Secure lockable shed for bicycle storage

T3
Lawson cypress
C2

G4
Western red cedar
C2

NEW DWELLING

T8
Cherry
C2

G9
Fruit trees
C2

T1
Monterey cypress
C2

T5
Cherry
U

NEW ACCESS AND PARKING

G2
Lawson cypress
C2

T7
Monterey cypress
C2

G6
Conifers/Ash
C2

G11
Conifers/Elder
C2

T10
Hazel
B-C2

New trees and shrubs to boundary to create screening to/from neighbouring properties

Wildflower meadow seed planting

G15
Western red cedar/Ash
U

G12
Conifers
C2

G14
Leyland cypress/Yew
C2

T13
Ash
U

Concrete kerb stones
Haunching
Steel reinforcing rods
crossfall
Porous paving surface
50mm sharp sand
Geotextile Separation Fabric
Cellular Confinement System (depth TBC by supplier)
4/20mm Clean Angular Stone
Two dimensional Geogrid
Geotextile Separation Fabric
Existing Ground Level
Max 50mm, depending on presence of roots

DRIVE CONSTRUCTION DETAIL IN NO-DIG AREA

Key

- Category U
- Category A
- Category B
- Category C
- Crown spread: retained trees
- Trees For Removal
- Root Protection Area
- Tree Protection Fence
- No-Dig Construction
- Ground Protection Area: existing hard surface
- BS 5837 Shade Area

SJ Stephens Associates
Savernake Barn, Stokke Common
Great Bedwyn
Marlborough
Wiltshire SN8 3LL
01672 871862
www.sjstephens.co.uk

JOB TITLE	8 WATER ROAD
DRAWING TITLE	TREE PROTECTION PLAN
DRAWING NUMBER	2444–01
REV	A
REVISIONS	
SCALE	1:200 at A1
DATE	SEP 25
DRAWN BY	cf

Tree/ Group No.	Species	Height (m)	Stem Diam. at 1.5m (mm)	Branch Spread (m)				Canopy Cleara -nce (m)	Age Class	Observations	Management Recommendations	Estimated Remaining Contribution (years)	BS 5837 Category Grading	Protect -ion Distnce (m)	Root Protect. Area (m2)
				N	S	E	W								
T1	Monterey cypress	7.5	380	2.5	3	3	3	2	Early mature	Ten stems from 1.5m, average 120mm diameter. Further stems removed. Ornamental variety with golden foliage. Area of dead foliage to south side. Low amenity value.	Prune out dead branches.	10-20	C2	4.6	65
G2	Lawson cypress	5	75 - 130					0	Early mature	Line of trees on boundary - outgrown hedge. Brambles and self set ash growing through. Some areas of dead foliage where cut hard back. Young privet planted along section of neighbours side.	Remove Lawson cypress to facilitate development.	10-20	C2	1.6	8
T3	Lawson cypress	10.5	340	2.5	2	2.5	2	2.5	Mature	Low limbs removed. Ivy over stem. Only moderate vigour. Crown in contact with bungalow roof.	Carry out minor pruning to provide clearance over roof.	10-20	C2	4.1	52
G4	Western red cedar	6.5	250					0.0	Mature	Line of trees - outgrown hedge, previously approx 1.2m in height. Growing vigorously.	Remove to facilitate development.	10-20	C2	3.0	28
T5	Cherry	3	280	1	1.5	0	3	0.5	Mature	Ornamental variety. Stem completely hollow with open cavity from base to 1.7m.	Remove.	<10	U	3.4	35
G6	Conifers/Ash	4.5 - 7.5	90 - 180					0.0	Mature	Line of Leyland cypress and western red cedar - outgrown hedge, with self set ash growing through. Low branches cut back. Some areas of dead foliage. Limited capacity for reduction without leaving unsightly dead branches.	Remove to facilitate development.	10-20	C2	2.2	15
T7	Monterey cypress	3.5	80	1.2	0	1.5	1	0.5	Early mature	Ornamental variety with golden foliage. Shaded out by G6 to south.	Remove to facilitate development.	5-15	C2	1.0	3
T8	Cherry	6.5	160	2	3.5	2.5	3	1.2	Early mature	Poor form and structure with curving and crossing stems and branches. Occasional cavities in old pruning wounds. Bramble growing through.	Remove to facilitate development.	10-20	C2	1.9	12
G9	Fruit trees	3 - 6.5	100 - 350					1.2	Mature	Trees growing along inside of boundaries with a few more centrally at northeastern end. Majority plum with apple and pear. Single self set ash. Some dead and dying stems. Unmanaged. No trees of arboricultural merit. Most misshapen with poor form and structure.	Remove to facilitate development and to allow new planting.	5-15	C2	4.2	55
T10	Hazel	6	270	3	3	3	3	1.5	Mature	Old stool. Approx 11 more mature stems, average 80mm diameter, with numerous small fresh stems.	Cut back stems as required to check growth and maintain size.	15-30	B-C2	3.2	33
G11	Conifers/Elder	6	150					0.5	Early mature/ Mature	One Lawson cypress, one Leyland cypress and a mature elder. Conifers previously cut to 1.2m but now grown out - both poor form and structure.	Consider removal to allow replacement planting.	5-15	C2	1.8	10

Tree/ Group No.	Species	Height (m)	Stem Diam. at 1.5m (mm)	Branch Spread (m)				Canopy Cleara -nce (m)	Age Class	Observations	Management Recommendations	Estimated Remaining Contribution (years)	BS 5837 Category Grading	Protect -ion Distnce (m)	Root Protect. Area (m2)
				N	S	E	W								
G12	Conifers	6.5 - 7.5	75 - 250					2	Early mature	Line of closely spaced trees - outgrown hedge. Majority Leyland cypress with Lawson cypress at northeastern end. Lower branches removed leaving unsightly stems. Growing vigorously. Low amenity value.	Consider removal to allow replacement planting.	10-20	C2	3.0	28
T13	Ash	5	110	2.5	2.5	2.5	2.5	2	Young	Under utility line. Base growing out from base of garage block wall - likely to cause significant structural damage if allowed to grow.	Remove.	<10	U	1.3	5

BS 5837:2012, Table 1 Cascade chart for tree quality assessment

Category and definition	Criteria (including subcategories where appropriate)			Identification on plan
Trees unsuitable for retention (see Note)				
Category U Those in such a condition that they cannot realistically be retained as living trees in the context of the current land use for longer than 10 years	• Trees that have a serious, irremediable, structural defect, such that their early loss is expected due to collapse, including those that will become unviable after removal of other category U trees (e.g. where, for whatever reason, the loss of companion shelter cannot be mitigated by pruning) • Trees that are dead or are showing signs of significant, immediate, and irreversible overall decline • Trees infected with pathogens of significance to the health and/or safety of other trees nearby, or very low quality trees suppressing adjacent trees of better quality *NOTE Category U trees can have existing or potential conservation value which it might be desirable to preserve; see **4.5.7**.*			See Table 2
	1 Mainly arboricultural qualities	**2 Mainly landscape qualities**	**3 Mainly cultural values, including conservation**	
Trees to be considered for retention				
Category A **Trees of high quality** with an estimated remaining life expectancy of at least 40 years	Trees that are particularly good examples of their species, especially if rare or unusual; or those that are essential components of groups or formal or semi-formal arboricultural features (e.g. the dominant and/or principal trees within an avenue)	Trees, groups or woodlands of particular visual importance as arboricultural and/or landscape features	Trees, groups or woodlands of significant conservation, historical, commemorative or other value (e.g. veteran trees or wood-pasture)	See Table 2
Category B **Trees of moderate quality** with an estimated remaining life expectancy of at least 20 years	Trees that might be included in category A, but are downgraded because of impaired condition (e.g. presence of significant though remediable defects, including unsympathetic past management and storm damage), such that they are unlikely to be suitable for retention for beyond 40 years; or trees lacking the special quality necessary to merit the category A designation	Trees present in numbers, usually growing as groups or woodlands, such that they attract a higher collective rating than they might as individuals; or trees occurring as collectives but situated so as to make little visual contribution to the wider locality	Trees with material conservation or other cultural value	See Table 2
Category C **Trees of low quality** with an estimated remaining life expectancy of at least 10 years, or young trees with a stem diameter below 150 mm	Unremarkable trees of very limited merit or such impaired condition that they do not qualify in higher categories	Trees present in groups or woodlands, but without this conferring on them significantly greater collective landscape value; and/or trees offering low or only temporary/transient landscape benefits	Trees with no material conservation or other cultural value	See Table 2

Default specification for protective barrier

Figure 2

Key

1 Standard scaffold poles
2 Heavy gauge 2 m galvanised tube and welded mesh infill panels
3 Panels secured to uprights and cross-members with wire ties
4 Ground level
5 Uprights driven into the ground until secure (minimum depth 0.6 m)
6 Standard scaffold clamps

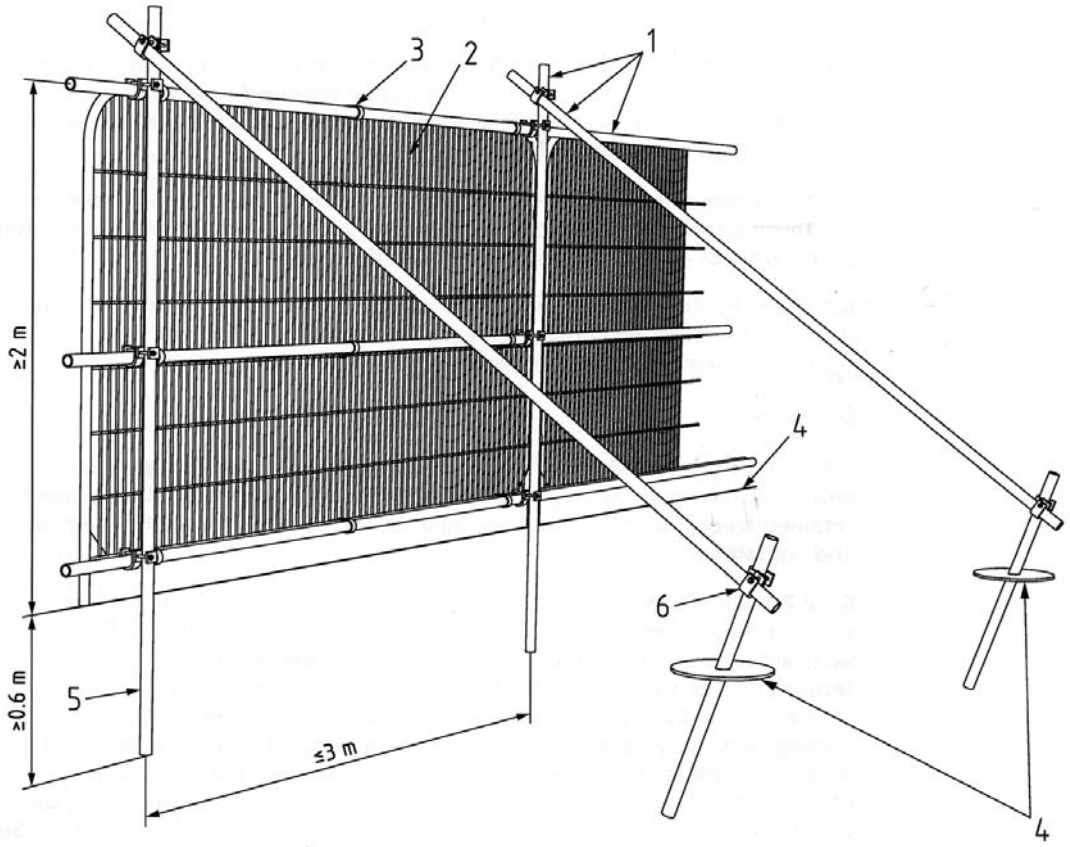

Examples of above-ground stabilising systems

Figure 3a
Stabiliser strut with base plate secured with ground pins

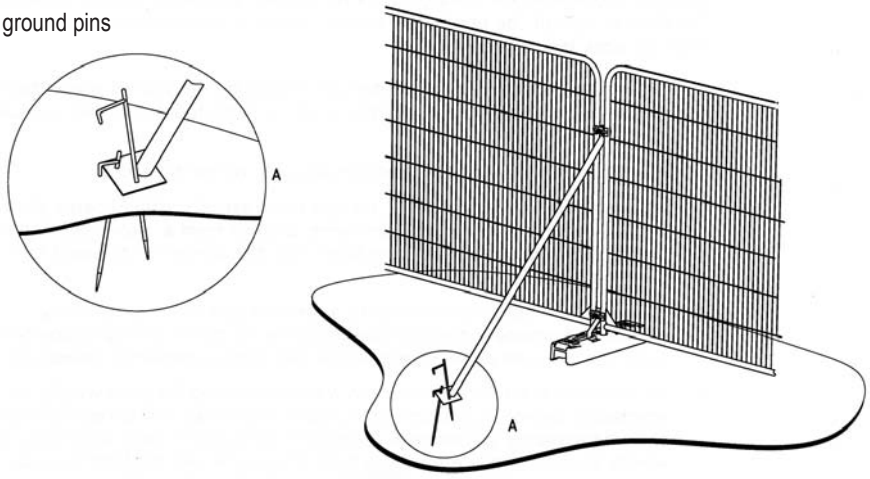

Figure 3b
Stabiliser strut mounted on block tray

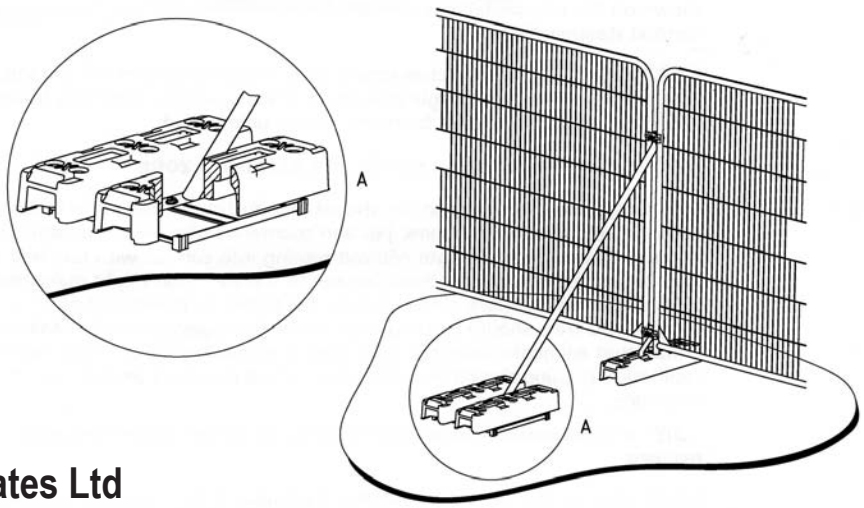

Above: Google Street View Image from 2019 showing Monterey cypress T1 and Lawson cypress G2.
Below: Photo taken March 2025. G2 previously a hedge but now grown out.

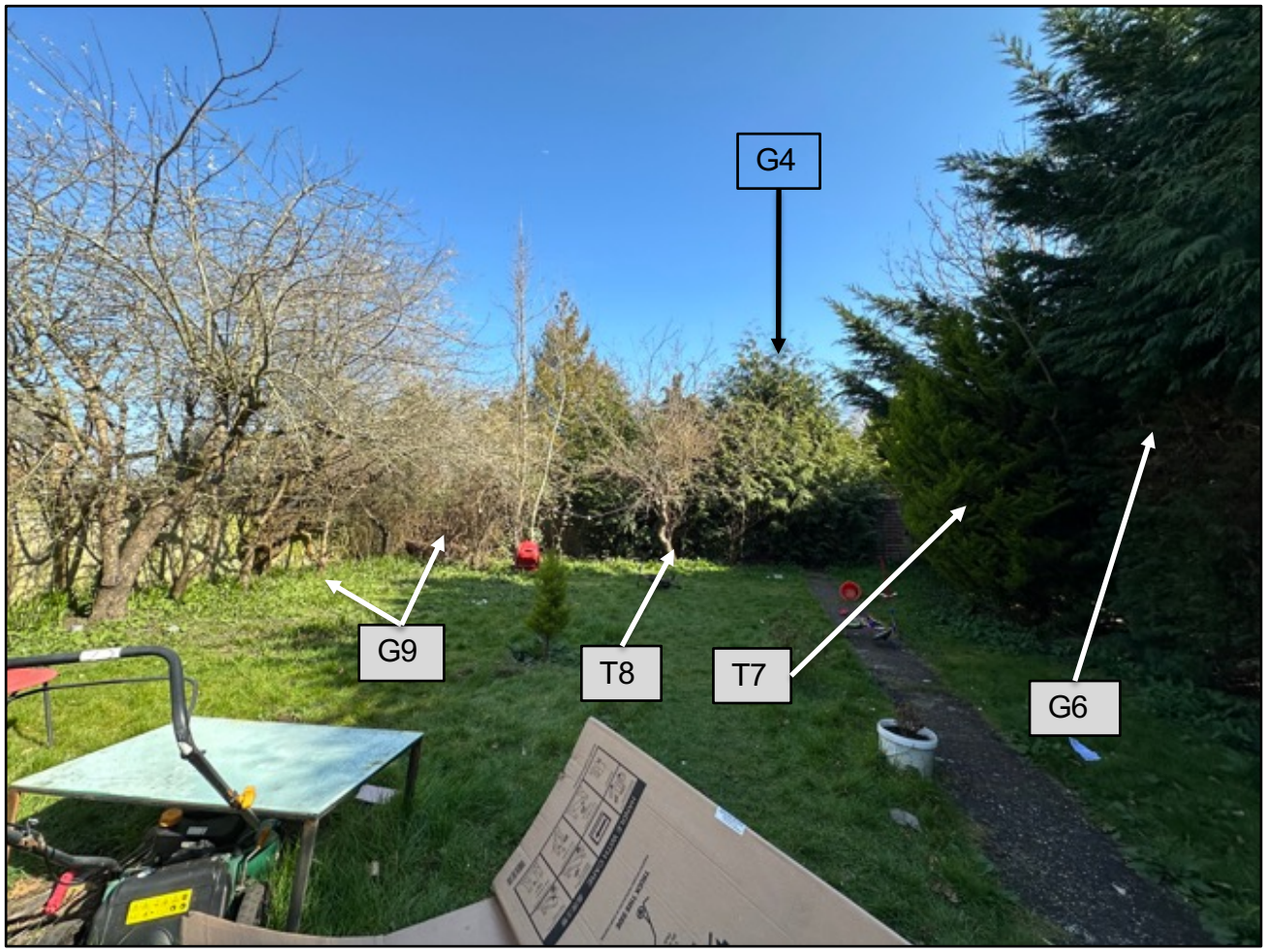

Above: View to northeast, across garden.
Below: Selected views of fruit trees within G9.

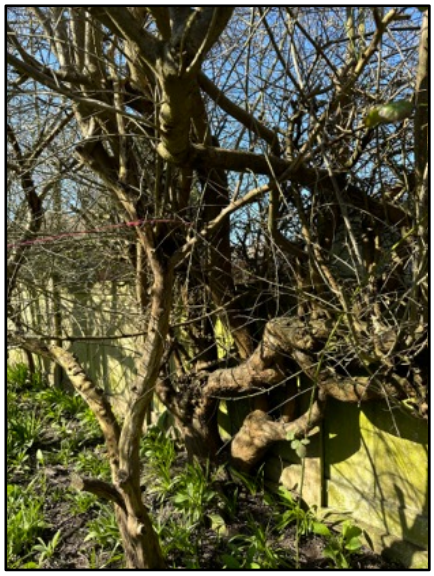

Appendix E

G12 Conifers, historically grown as a hedge but now grown out.

G14 1no. Leyland cypress and 1no. Yew. Historically grown as a hedge but now grown out.

Below left: Base of western red cedar G15 growing between fence and concrete edging. Assumed to be self set.

Below: Base of ash T13 growing from base of garage block wall. Assumed to be self set.

all drawings remain the copyright of colony and cannot be reproduced on whole or part without our approval

this drawing is for planning purposes only and not a construction issue

documents & drawings are not to be altered without the consent of colony

dimensional accuracy only applies to the written notation

drawings issued by colony are to be cross-referenced where necessary with other relevant consultants' information

if any contradiction is found in the drawing set, or if you are in any doubt, ask the architect

NOTES

colony

Collaborating with:

Muhammad Yousaf

Job:	Drawing:	Revision:
456	02-10	-

Project:
8 Water Road
Reading

Drawing Name:
Site Plan
As Proposed

Date:	Status:
09.2025	planning

Drawn By:	Checked By:
TF	EM

RIBA Chartered Practice

Colony Architects Ltd.
The Wine Store, Brewery Court,
Theale, Reading, RG7 5AJ
+44 (0)118 380 0328
hello@colonyarchitects.com
colonyarchitects.com

1:200 | 02 04 06 08 10 12 14 16 18 20 22 24