Trevor Heaps
Arboricultural Consultancy Ltd.

12 Plover Drive, Milford-on-Sea, Hampshire, SO41 0XF - Tel: 07957 763 533

Email: trevor@trevorheaps.co.uk • www. trevorheaps.co.uk

Arboricultural Impact Assessment
Method Statement & Tree Protection Plan
(to BS:5837 2012)

10 Shinfield Road, Reading

RG2 7BW

Prepared for Simran Luthra

Prepared by Trevor Heaps BSc, MICFor, RC. Arbor. A

Date: 14th August 2025

Ref: TH 5417

AA Registered CONSULTANT trees.org.uk

Institute of Chartered Foresters
Registered Consultant

Summary

The site is currently occupied by a large bungalow, and the proposal is to extend it (front, rear, side and first floor) to create 2 x 6 bed HMOs.

The proposals will require the removal (transplantation of) a small Fig at the rear of the existing bungalow and the removal of a part of a group of shrubs at the front.

Some basic tree protection measures and working methodology (in accordance with BS 5837:2012) will ensure the retained and third-party trees are not detrimentally affected during construction.

The relationship between the proposal and trees is sustainable and will not result in any unreasonable pressure to carry out inappropriate tree works.

If the proposal is implemented in accordance with the recommendations laid out in this report, neither the trees or wider landscape will be adversely affected.

This is an arboriculturally defensible scheme and there are no (arboricultural) reasons why planning consent should not be granted.

© Trevor Heaps Arboricultural Consultancy Ltd.

Contents

1.0 Introduction 1

2.0 Instruction 1

3.0 Drawings provided. 1

4.0 Report context 1

5.0 Statutory tree protection 2

6.0 Ecological constraints 2

7.0 The site 3

8.0 The soil and topography 3

9.0 Arboricultural Impact Assessment (AIA) and Tree Protection Methods 3

10.0 Conclusions 6

11.0 The Arboricultural Method Statement (AMS) 7

12.0 Arboricultural supervision 8

13.0 Signature 9

Appendix 1 - Professional résumé 10

Appendix 2 - Tree data schedule 11

Appendix 3 - Tree data schedule explanatory notes 13

Appendix 4a – Specifications for generic tree protective measures 15

Appendix 4b – Specifications for site-specific tree protective measures 23

Appendix 5 – General precautions and further information 24

Appendix 6 - Procedure to follow in case of damage to retained trees 26

Appendix 7 - Induction form for all site personnel 27

Appendix 8 - Site inspection record 28

Appendix 9 - Tree Protection Plan/s ..... End of Report

© Trevor Heaps Arboricultural Consultancy Ltd.

1.0 Introduction

1.1 I am Trevor Heaps, Director of Trevor Heaps Arboricultural Consultancy Ltd. I hold a First-Class Honours Degree in Arboriculture; I am a Chartered Arboriculturist and a professional member of the Institute of Chartered Foresters; and I am also a Registered Consultant with the Arboricultural Association. Further information about my qualifications and experience is provided in Appendix 1.

1.2 Contact details:

Who	Name	Organisation	Details
Arboricultural Consultant	Trevor Heaps	THAC Ltd., 12 Plover Drive, Milford-on-Sea, Hampshire, SO41 0XF	Tel: 07957 763 533 trevor@trevorheaps.co.uk
Client	Simran Luthra		
Reading Borough Council - LPA	Tree Officer	Civic Offices, Bridge St, Reading RG1 2LU	Tel: 0118 937 3787 Website: http://www.reading.gov.uk/

2.0 Instruction

2.1 We are to survey all significant trees that could be affected by the proposed works.

2.2 We are then to prepare a report to appraise the effect these works will have on any nearby trees and the surrounding landscape.

2.3 We are then to set out recommendations for the protection of the trees during development - in accordance with British Standard 5837:2012 'Trees in relation to design, demolition and construction – Recommendations' (BS5837).

3.0 Drawings provided.

3.1 Proposed Site Plan – Ground Floor – Ref. 250007 KTE-XX-GF-DR-A-00900 – Dated 23/05/2025

4.0 Report context

4.1 The site was surveyed by Trevor Heaps on the 13th August 2025.

4.2 The trees were surveyed from within the site at ground level. No climbed inspections were carried out and no root/soil samples were taken for analysis.

© Trevor Heaps Arboricultural Consultancy Ltd.

4.3 The trees were inspected based on the Visual Tree Assessment (VTA) developed by Mattheck & Breloer (The Body Language of Trees, 1994).

4.4 Tree heights, crown spreads and stem diameters were measured with a clinometer, a Disto laser measure and a diameter measuring tape respectively.

4.5 Small trees and shrubs (with stem diameters less than 75mm) were not surveyed.

4.6 This report is based on the information provided (i.e. site plans, proposed drawings, scales, measurements etc.) and observations during the site visit.

4.7 This report will support a planning application and/or an application to discharge a tree-related condition and its purpose is to assist and inform the planning process.

4.8 This report does not set out the detailed, working specifications of tree protection measures and engineering / design features, but provides sufficient detail to demonstrate the feasibility of the scheme in principle.

4.9 The report does not assess the potential influence of trees upon load-bearing soils beneath existing and proposed structures (resulting from water abstraction by trees on shrinkable soils).

5.0 Statutory tree protection

5.1 We were advised that none of the trees within this site are covered by a Tree Preservation Order (TPO), or growing within a Conservation Area.

5.2 The closest TPO tree is in front of no. 20 Shinfield Rd. (193/06), within the public patch, which is approx. 16.3m (centreline) away from the proposed front extension.

6.0 Ecological constraints

6.1 The Wildlife and Countryside Act 1981 (as amended by the Countryside and Rights of Way Act 2000) provides statutory protection to birds, bats and other species that inhabit trees.

6.2 In addition to any tree matters considered in this report, these protected animals could impose significant constraints on the use and timing of access to the site.

© Trevor Heaps Arboricultural Consultancy Ltd.

7.0 The site

7.1 This property is situated within a leafy, residential part of Reading.

8.0 The soil and topography

8.1 The soils at this site were determined using information provided by the British Geological Survey and observations during the site visit.

8.2 The site is level with no adverse features, and the soil texture is London Clay Formation - Clay, silt and sand.

8.3 Given the information above, the soil has the potential of becoming compacted (which is harmful to tree roots).

9.0 Arboricultural Impact Assessment (AIA) and Tree Protection Methods

9.1 The following section describes the potential effects the construction works will have on the subject trees. Mitigation measures are recommended, and this information should be read in conjunction with the supporting Tree Protection Plan (TPP).

9.2 Further information on the subject trees is provided in Appendices 2 & 3.

9.3 Trees to be removed to facilitate development

9.3.1 The proposals will require the removal a small Fig (T18) at the rear of the existing bungalow, and part of a group of shrubs (G3) at the front.

9.3.2 The Fig is small and young enough to transplant elsewhere in the rear garden.

9.3.3 To mitigate the loss of the shrubs, new small trees and shrubs will be planted post construction.

9.3.4 Some shrub locations have been shown on the proposed plans, but this matter can be dealt with separately by way of a landscape scheme.

© Trevor Heaps Arboricultural Consultancy Ltd.

9.4 Physical damage to stems of retained trees

9.4.1 There is a risk that the crowns and stems of some of the retained trees could be accidentally damaged during development.

9.4.2 To minimise this risk, protective fencing will be erected in front of their stems and, where space allows, along their canopy extents.

9.5 Soil compaction around retained trees

9.5.1 Soil compaction can be caused by various construction-related activities such as storage or materials and the use of heavy machinery (or even heavier than normal pedestrian access during works). It is harmful to tree roots because it reduces gaseous exchange and the availability of water and nutrients.

9.5.2 To avoid the soil becoming unnecessarily compacted, all vulnerable areas will be separated from the working area by protective fencing or will be covered with ground protection.

9.5.3 The existing hard surfaces will provide ample protection for any roots growing beneath and so do not need reinforcing.

9.6 Shed bases within the RPAs of retained trees.

9.6.1 A new bin store is to be constructed within the front garden, close to a group of retained shrubs (G3) and two trees (T1 & T2).

9.6.2 To minimise root disruption and allow for root growth, the bin-store base will be cast at / on top of the existing ground levels, or will sit on a 'no-dig' surface such as gravel grids.

9.6.3 There will be no excavations or changes of levels within the trees' RPAs.

© Trevor Heaps Arboricultural Consultancy Ltd.

9.7 Underground services

9.7.1 The proposals will be designed in such a way as to either connect directly to existing underground services (with no further excavations) or be connected to existing services using a route outside the RPAs of trees shown retained.

9.7.2 If existing services within RPAs require upgrading, care shall be taken to minimise disturbance and where practicable, trenchless techniques employed; only as a last resort should open excavations be considered. Where existing services within RPAs are deemed not satisfactory for any further use, they should be left in situ rather than being excavated or removed.

9.7.3 If, for whatever reason, the proposed services need to be moved (and incursions into RPAs are unavoidable), then the installation works will be carried out under full arboricultural supervision and will, at the very least, comply with the methods and guidelines detailed in the National Joint Utilities Group publication NJUG 4, Guidelines for the Planning, Installation, and Maintenance of Utility Services in Proximity to Trees (November 2007).

9.8 New surfacing within the RPA of retained trees

9.8.1 The new path that will extend into the rear garden from the existing side path will require very minor excavations within the RPA of one of the Cherry trees in G9. The RPA incursion has been calculated as follows:

- (north-eastern most) Cherry in G9 – 0.3m of 10m = 3%

9.8.2 Section 5.3.1 (a) of BS 5837:2012 recommends that, if operations (in this case, excavations for the sub-base and wearing course) are proposed within a tree's RPA then, the project arboriculturist should demonstrate that it can remain viable and that the area lost to encroachment can be compensated for elsewhere, contiguous with its RPA.

9.8.3 An RPA is an estimation of the minimum root system needed to sustain the condition of a tree (if all roots outside it were to be severed); it is not a measure of a tree's entire rooting system.

9.8.4 It is commonly accepted, within the arboricultural industry, that the RPA represents about a third of a tree's actual rooting system and, consequently, whilst the RPA is particularly important to ensure that there are no adverse effects on stability, if an encroachment does not significantly reduce the overall assimilative function of the root system, it is unlikely to cause harm.

© Trevor Heaps Arboricultural Consultancy Ltd.

9.8.5 Therefore, although there is an incursion into the tree's RPA (minimum root system needed); the percentage of the tree's actual rooting system affected is much less (a third of the figure shown above). Furthermore, it is possible to off-set the incursion within soft areas contiguous with the RPA (within the originating garden).

9.8.6 In terms of viability, research has shown that healthy trees of most species can withstand the loss of some roots (to a maximum of about 20% of the rooting area) with no long-term detrimental impact (Helliwell & Fordham 1992).

9.8.7 It should also be noted that an RPA is depicted on a plan as a two-dimensional circle; however, they are in fact three-dimensional, because the roots of most trees extend down into the soil by about 600mm (some roots can extend 2-3m down into the soil). Therefore, even if the roots in the upper soil horizons are disturbed during this work, only a small portion of the actual three-dimensional rooting area will have been affected.

9.8.8 The tree is healthy, and methodology has been provided in the appendices to minimise root disturbance.

9.8.9 So long as the methodology is followed, and the vulnerable parts of the tree's RPA is protected during construction, it will not be adversely affected.

10.0 Conclusions

10.1 The proposals will require the removal (transplantation of) a small Fig at the rear of the existing bungalow and the removal of part of a group of shrubs at the front.

10.2 The retained / third-party trees will be protected using up-to-date methodology and guidance provided by the current British Standards (BS 58378:2012). To this end, a site-specific AMS and TPP have been provided. These are found in Section 11 and Appendix 9 respectively.

10.3 Provided the recommendations laid out in this report are followed, the proposals will not detrimentally affect the trees and, with a well thought out tree planting and landscaping scheme, will improve and enhance the character, appearance and biodiversity of the local area.

10.4 The trees do not cause any significant conflicts in terms of construction activities, nor will any significant issues of post-development pressure be likely to emerge that could not be managed with routine, minor tree maintenance.

© Trevor Heaps Arboricultural Consultancy Ltd.

11.0 The Arboricultural Method Statement (AMS)

11.1 Effective tree protection relies on following a logical sequence of events and arboricultural supervision. This AMS lays down the methodology for all construction works that may influence significant trees and recommendations for arboricultural supervision are provided in Section 12.

11.2 It is essential that this AMS is observed and adhered to. Therefore, a copy of this AMS must be issued to the building contractor to be integrated into their work schedule and must also be permanently made available on-site for the duration of development.

11.3 This AMS should be read in conjunction with the supporting Tree Protection Plan (TPP), which is found in Appendix 9.

11.4 At this site, operations are to occur in the following sequence (refer to Appendix 4 for further details on underlined methodology; which are listed in alphabetical order):

1. Carry out tree work operations highlighted yellow in the tree data schedule (Appendix 2). All tree works are to be carried out by a competent and experienced arborist to current British Standards (see Appendix 5.9 for assistance finding a suitable arborist).

2. Erect protective fencing along the position(s) shown by the dashed red line/s on the TPP.

3. Lay ground protection and/or retain suitably hard-wearing existing hard surfaces within the area(s) shown by the diagonal blue lines on the TPP.

4. Retain all existing hard surfaces as shown by the sandy coloured squares on the TPP.

5. Provide a photographic record of all tree protection to arboricultural consultant – this will be forwarded to and approved by the Council's Arboricultural Officer and must demonstrate that all aspects of tree and ground protection measures have been implemented in accordance with this Arboricultural Report. The tree protection measures shall be retained until completion of all works permitted.

6. Commence construction.

7. Remove tree protection when all construction activity has ended.

8. Carry out tree / shrub planting and any other landscaping works (including laying of floating concrete raft foundations for bin-store and extra care to be taken during the shallow excavations needed for the new rear path).

© Trevor Heaps Arboricultural Consultancy Ltd.

12.0 Arboricultural supervision

12.1 A suitably-qualified arboriculturalist will provide on-going supervision during construction. The occasions when supervision is required are outlined in Table 2. If the LPA wish to see further supervision, this matter can be dealt with by amending the report and/or by condition.

Table 2: Indicative arboricultural supervision requirements

Supervision details	Required (Y / N)	When	Details	Nature	Sign off
~~Meeting with tree contractors~~	~~N~~	~~Prior to protective measures being installed~~	~~To ensure tree work instructions are clear and understood.~~	~~Informal meeting~~	~~No follow up required~~
~~Pre-commencement site meeting~~	~~N~~	~~Prior to any site activity~~	~~To ensure contractors are briefed & understand the AMS & TPP. A site supervisor will be appointed to oversee tree protection & the reporting of any damage to trees or deviation from the AMS - to the project arboriculturist / LPA~~	~~Informal and open discussions. Induction form signed by attendees~~	~~Details of meeting to be sent to LPA within 5 days~~
Protective measure check	Y	Prior to any site activity	To ensure that protective measures are fit-for-purposed and correctly positioned.	Photos to be provided to consultant	Details of to be sent to LPA within 5 days
~~On-going supervision~~	~~N~~	~~Every 2 weeks during construction~~	~~To ensure that the protective measures have not been moved and continue to be fit-for-purpose.~~	~~Site meeting with a site monitoring report to be prepared~~	~~Details of to be sent to LPA within 5 days~~
~~Supervision of excavation works near trees~~	~~N~~	~~During construction~~	~~To supervise key stages of works near trees (insert which / when)~~	~~Site meeting with a site monitoring report to be prepared~~	~~Details of to be sent to LPA within 5 days~~
~~Meeting with landscape contractors~~	~~N~~	~~After construction~~	~~To provide advice on tree / shrub selection (if not conditioned)~~	~~Informal meeting~~	~~No follow up required~~

12.2 A site inspection record (see Appendix 8) will be prepared after each visit and will state the condition of tree protection measures and outline any required remedial action (and timescales).

12.3 To demonstrate compliance, and to help the LPA discharge relevant planning conditions, all site monitoring reports will be forwarded to the LPAs arboricultural officer within 5 working days of the visit.

12.4 NOTE: It is the applicant's responsibility to arrange meeting dates with the arboriculturist.

© Trevor Heaps Arboricultural Consultancy Ltd.

13.0 Signature

This report represents a true and factual account of the potential arboricultural impacts, and makes recommendations for appropriate protective measures, at the subject property.

Signed

.....

Trevor Heaps

Chartered Arboriculturist

BSc, MICFor, RC. Arbor. A

Dated

14th August 2025

© Trevor Heaps Arboricultural Consultancy Ltd.

Appendix 1 - Professional résumé

I am Trevor Heaps, Director of Trevor Heaps Arboricultural Consultancy Ltd.

I hold a First-Class Honours Degree and a Foundation Degree in Arboriculture; I am a Chartered Arboriculturist and a professional member of the Institute of Chartered Foresters; I am also a Registered Consultant with the Arboricultural Association.

I have worked within the Arboricultural industry since 1995 and have extensive experience of working as a tree surgeon (arborist), tree officer, TPO officer and consultant.

Professional training

- Arboriculture and Bats: Scoping Surveys for Arborists (BCT & AA) – October 2017
- Tree Science (AA) – June 2016
- OPM (Oak Processionary Moth) Training (FC) – May 2016
- Visual Tree Assessment (Arboricultural Association) - October 2015
- Trees and the Law (Dr Charles Mynors) - June 2015
- Mortgage (Home Buyers) Report Writing (LANTRA / CAS) - February 2015
- Tree Preservation Orders - effective application (LANTRA / CAS) - November 2014
- Professional Tree Inspection 3-day course (LANTRA / AA) - July 2014
- Arboricultural Consultancy Course (AA) - May 2014
- Further down the subsidence trail 1-day course (AA) - April 2013
- Getting to grips with subsidence 1-day course (AA) - November 2012

AA – Arboricultural Association

BCT – Bat Conservation Trust

CAS – Consulting Arborist Society

FC – Forestry Commission

© Trevor Heaps Arboricultural Consultancy Ltd.

Appendix 2 - Tree data schedule

Ref	Name	Age	DBH (mm)	Hgt. (m)	Can. hgt. (m)	Can N (m)	Can E (m)	Can S (m)	Can W (m)	Physio cond.	Struct cond.	Life Exp.	Ret. Cat.	Comments	Rec's (proposed works are highlighted)
T1	Thuja plicata (Western Red Cedar)	EM	300	14	3	2.5	2.5	2.5	2.5	Normal	Normal	40+	A2	Growing on third-party land (dbh estimated).	
T2	Prunus lusitanica (Portugal Laurel)	M	150,150,250	5	2.5	2.5	2.5	2.5	2.5	Fair	Fair	20+	C2		
G3	Syringa vulgaris (Lilac),Quercus ilex (Holm Oak),Viburnum (Viburnum)	SM	150	4	1	1.5	1.5	1.5	1.5	Normal	Normal	40+	C2		Remove SW section of group to facilitate new bin store
G4	Prunus lusitanica (Portugal Laurel),Choisya ternata (Mexican Orange)	EM	150	2.5	1	1.5	1.5	1.5	1.5	Normal	Normal	40+	C2		
S5	Cotoneaster frigidus (Cotoneaster)	M	150	8	3	2.5	2.5	2.5	2.5	Normal	Normal	40+	C2		
T6	Chamaecyparis lawsoniana (Lawson Cypress)	EM	300	12	3	3.5	3.5	3.5	3.5	Normal	Fair	40+	B2	Ivy (heavy covering).	
T7	Betula pendula 'Youngii' (Weeping Silver Birch)	EM	250	5	1.5	3.5	3.5	3.5	3.5	Normal	Normal	40+	B2	Growing on third-party land (dbh estimated).	
T8	Fraxinus excelsior (Ash)	SM	75	6	2	1.5	1.5	1.5	1.5	Normal	Normal	40+	C2	Growing on third-party land (dbh estimated).	
G9	Prunus avium (Wild Cherry)	EM	150	10	4	4	4	4	4	Normal	Normal	40+	C2	Growing on third-party land (dbh estimated).	
T10	Fraxinus excelsior (Ash)	SM	150	6	2	2.5	2.5	2.5	2.5	Normal	Normal	40+	C2	Growing on third-party land (dbh estimated).	
T11	Fraxinus excelsior (Ash)	SM	75	6	2	1.5	1.5	1.5	1.5	Normal	Normal	40+	C2	Growing on third-party land (dbh estimated).	
T12	Prunus avium (Wild Cherry)	SM	100	8	2.5	2.5	2.5	2.5	2.5	Normal	Normal	40+	C2	Growing on third-party land (dbh estimated).	

© Trevor Heaps Arboricultural Consultancy Ltd.

Ref	Name	Age	DBH (mm)	Hgt. (m)	Can. hgt. (m)	Can N (m)	Can E (m)	Can S (m)	Can W (m)	Physio cond.	Struct cond.	Life Exp.	Ret. Cat.	Comments	Rec's (proposed works are highlighted)
T13	Robinia pseudoacacia (Acacia)	SM	100	8	2.5	2.5	2.5	2.5	2.5	Normal	Normal	40+	C2	Growing on third-party land (dbh estimated).	
T13	Fraxinus excelsior (Ash)	SM	75	6	2	1.5	1.5	1.5	1.5	Normal	Normal	40+	C2	Growing on third-party land (dbh estimated).	
T14	Fraxinus excelsior (Ash)	SM	150	6	2	2.5	2.5	2.5	2.5	Normal	Normal	40+	C2	Growing on third-party land (dbh estimated).	
T15	Cotinus coggygria (Smoke Bush)	SM	100	3.5	1	1.5	1.5	1.5	1.5	Normal	Normal	40+	C2		
T16	Abies sp. (Fir)	SM	75	2.5	0	1	1	1	1	Normal	Normal	40+	C2		
T17	Pyrus communis (Common Pear)	EM	240	3.5	1.5	1.5	1.5	1.5	1.5	Normal	Fair	40+	B2	Topped in the past.	
T18	Ficus carica (Fig)	Y	50	2.5	0.25	1.5	1.5	1.5	1.5	Normal	Normal	40+	C2		Dig up (carefully) and transplant elsewhere in rear garden
T19	Gleditsia triacanthos (Honey Locust)	SM	100	4	1.5	2	2	2	2	Normal	Normal	40+	C2		
T20	Trachycarpus fortunei (Chusan Palm)	EM	200	5	1.5	1.75	1.75	1.75	1.75	Normal	Normal	40+	B2		
T21	Malus sylvestris (Crab Apple)	Y	50	1.5	1	1.5	1.5	1.5	1.5	Normal	Normal	40+	C2		

© Trevor Heaps Arboricultural Consultancy Ltd.

Appendix 3 - Tree data schedule explanatory notes

This section explains the terms used in the **Tree data schedule** (Appendix 2).

Ref: Each item of vegetation has its own unique number, prefixed by a letter such that:

T1=Tree **S2**=Shrub or stump **G3**=Group **H4**=Hedge **W5**=Woodland

Species: Latin (and common names in brackets) are given.

Age:

- **Y - Young -** Usually less than 10 years' old
- **SM - Semi-mature -** Significant future growth to be expected, both in height and crown spread (typically below 30% of life expectancy)
- **EM - Early-mature -** Full height almost attained. Significant growth may be expected in terms of crown spread (typically 30-60% of life expectancy)
- **M - Mature -** Full height attained. Crown spread will increase but growth increments will be slight (typically 60% or more of life expectancy)
- **V - Veteran -** A level of maturity whereby significant management may be required to keep the tree in a safe condition
- **OM – Over-mature -** As for veteran except management is not considered worthwhile

DBH (mm): Stem diameter, measured in mm, taken at 1.5m above ground level where possible.

Hgt. (m): Height: Measured from ground level to the top of the crown in metres.

Can Hgt. (m): Crown height: Measured from ground level to the lowest tips of the main crown begins in metres. Where the crown is unbalanced it is measured on the side deemed to be most relevant. This is usually the side facing the area of anticipated development.

Can N, S, E, W: - Canopy extents
Approximate radial crown spread measured to the four cardinal points (for individual trees only)

Physio cond.: Indicates the physiological condition of the tree as one of the following categories:

- **Normal -** Healthy tree with no symptoms of significant disease
- **Fair -** Tree with early signs of disease, small defects, decreased life expectancy, or evidence of less-than-average vigour for the species
- **Poor -** Significant disease present, limited life expectancy, or with very low vigour for the species and evidence of physiological stress
- **Very poor -** Tree is in advanced stages of physiological failure and is dying
- **Dead -** No leaves or signs of life

© Trevor Heaps Arboricultural Consultancy Ltd.

Struct cond.: Indicates the structural condition of the tree as one of the following categories:

- **Normal** - No significant structural defects noted
- **Fair** - Some structural defects noted but remedial action not required at present
- **Poor** - Significant defects noted resulting in a tree that requires regular monitoring or remedial action
- **Very poor** - Major defects noted that compromise the safety of the tree. Remedial works or tree removal is likely to be required.
- **Dead** - No leaves or signs of life

Life Exp.: The estimated number of years before the tree may require removal (<10), (10 – 20), (20 – 40), or (40+).

Ret. Cat.: - Retention category: BS5837:2012 Category where:

- **U = Trees unsuitable for retention**. Trees in such a condition that cannot realistically be retained as living trees in the context of the current land use for longer than 10 years. These trees are shown on the tree plans with red centres.

- **A = Trees of high quality**. Trees of high quality with an estimated remaining life expectancy of at least 40 years. These trees are shown on the tree plans with green centres.

- **B = Trees of moderate quality**. Trees of moderate quality with an estimated remaining life expectancy of at least 20 years. These trees are shown on the tree plans with blue centres.

- **C = Trees of low quality.** Trees of low quality with an estimated remaining life expectancy of at least 10 years, or young trees with a stem diameter below 150mm. These trees are shown on the tree plans with grey centres.

Trees of notable quality are graded as Category A or Category B. These trees are sometimes divided further into sub-categories:

- Sub-category 1 is allocated where it has been assessed that the tree has mainly arboricultural qualities.
- Sub-category 2 is allocated where it is assessed that the tree has mainly landscape qualities.
- Subcategory 3 is allocated where it is assessed that the tree has mainly cultural qualities, including conservation.

Trees may be allocated more than one sub-category. All sub-categories carry equal weight, with for example an A3 tree being of the same importance and priority as an A1 tree.

Comments: Tree form and pruning history are also recorded along with an account of any significant defects.

Rec's - Recommendations: Usually based on any defects observed and intended to ensure that the tree is in an acceptable condition.

© Trevor Heaps Arboricultural Consultancy Ltd.

Appendix 4a – Specifications for generic tree protective measures

Excavations for shallow sub-bases (i.e. for new rear path)

The RPA of the subject tree/s shall be marked on the ground with fluorescent marker paint.

To ensure any surface roots are cut as cleanly as possible, a hand-spade will be used to cut along the edge of the excavation - to a depth no greater than 150mm.

Having cleanly severed any roots growing within the upper soil horizons, a rake can then be used to scrape away the loose soil.

A sub-base of gravel and then a laying course of grit / sharp sand (not builders' sand, which has a high salt content) can then be laid prior to the final laying of block paving (with textured sides to allow drainage) or resin-bonded gravel.

Ground Protection

The following *italicised* text is based on an extract from British Standard 5837:2012 - Trees in relation to design, demolition and construction– Recommendations.

Temporary ground protection should be able to support any traffic entering or using the site without being distorted or causing compaction of underlying soil and might comprise one of the following:

a) for pedestrian-movements only, a single thickness of scaffold boards placed either on top of a driven scaffold frame, to form a suspended walkway, or on top of a compression-resistant layer (e.g. 100 mm depth of woodchip), laid onto a geotextile membrane;

b) for pedestrian-operated plant up to a gross weight of 2 t, proprietary, inter-linked ground protection boards placed on top of a compression-resistant layer (e.g. 150 mm depth of woodchip), laid onto a geotextile membrane;

c) for wheeled or tracked construction traffic exceeding 2 t gross weight, an alternative system (e.g. proprietary systems or pre-cast reinforced concrete slabs) to an engineering specification designed in conjunction with arboricultural advice, to accommodate the likely loading to which it will be subjected.

The location of the temporary ground protection is shown on the tree protection plan and detailed within the arboricultural method statement.

© Trevor Heaps Arboricultural Consultancy Ltd.

In all cases, the objective will be to avoid the unnecessary compaction of soil (which can arise from a single passage of a heavy vehicle, especially in wet conditions) so that tree root functions remain unimpaired.

All ground protection is to be maintained in good order, so it is fit for purpose throughout development. The ground protection will not be altered in any way, or prematurely removed without prior consent of the project arboriculturist or the LPA arboricultural officer.

Figure 1: An example of ground protection on work areas within a RPA (BS 5837:2005).

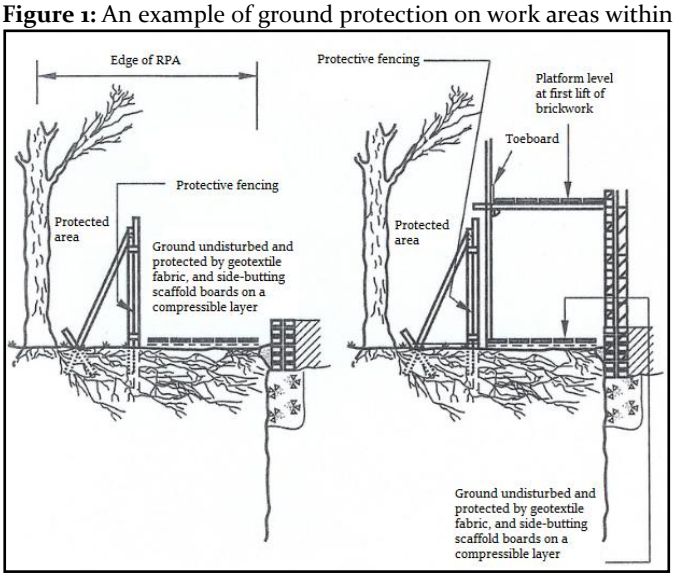

Photo 1. Scaffold boards placed on woodchip

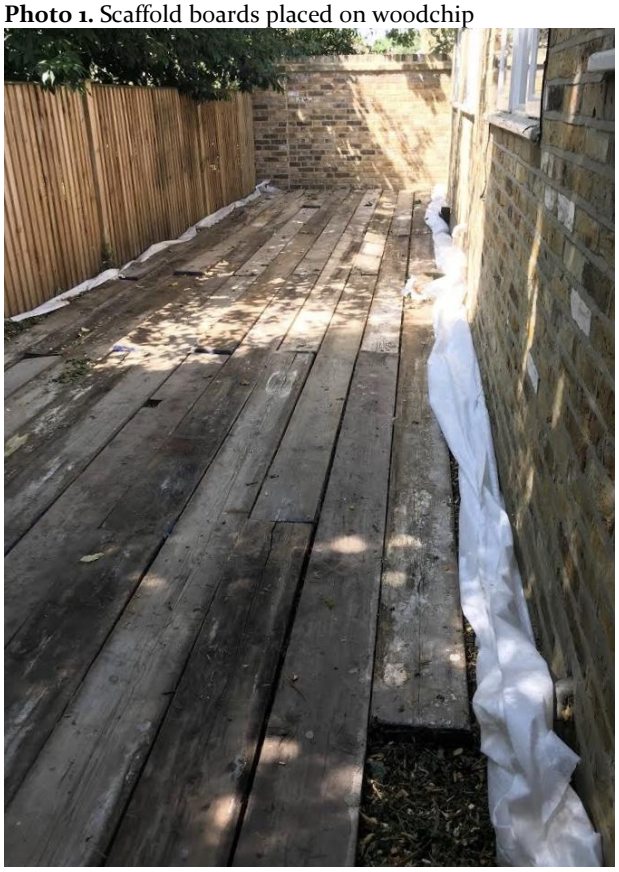

© Trevor Heaps Arboricultural Consultancy Ltd.

Photo 2. An example of heavy-duty ground protection.

Photo 2 Scaffold framework supporting wooden boards

© Trevor Heaps Arboricultural Consultancy Ltd.

Protective fencing

The following is based on an extract from British Standard 5837:2012 - Trees in relation to design, demolition and construction– Recommendations.

The framework support (shown in Figure 2 and photo 1) is the usual method of support for 'Heras' fencing. Some variations are possible if site conditions are appropriate; i.e. support by wooden posts (75mm x 75mm x 2.75m) dug or concreted into the ground (dry mix concrete contained within a plastic bag), or if there is no pressure for access, a lighter form of netting on stakes.

Figure 2: Default specification for protective barrier (BS 5837:2012)

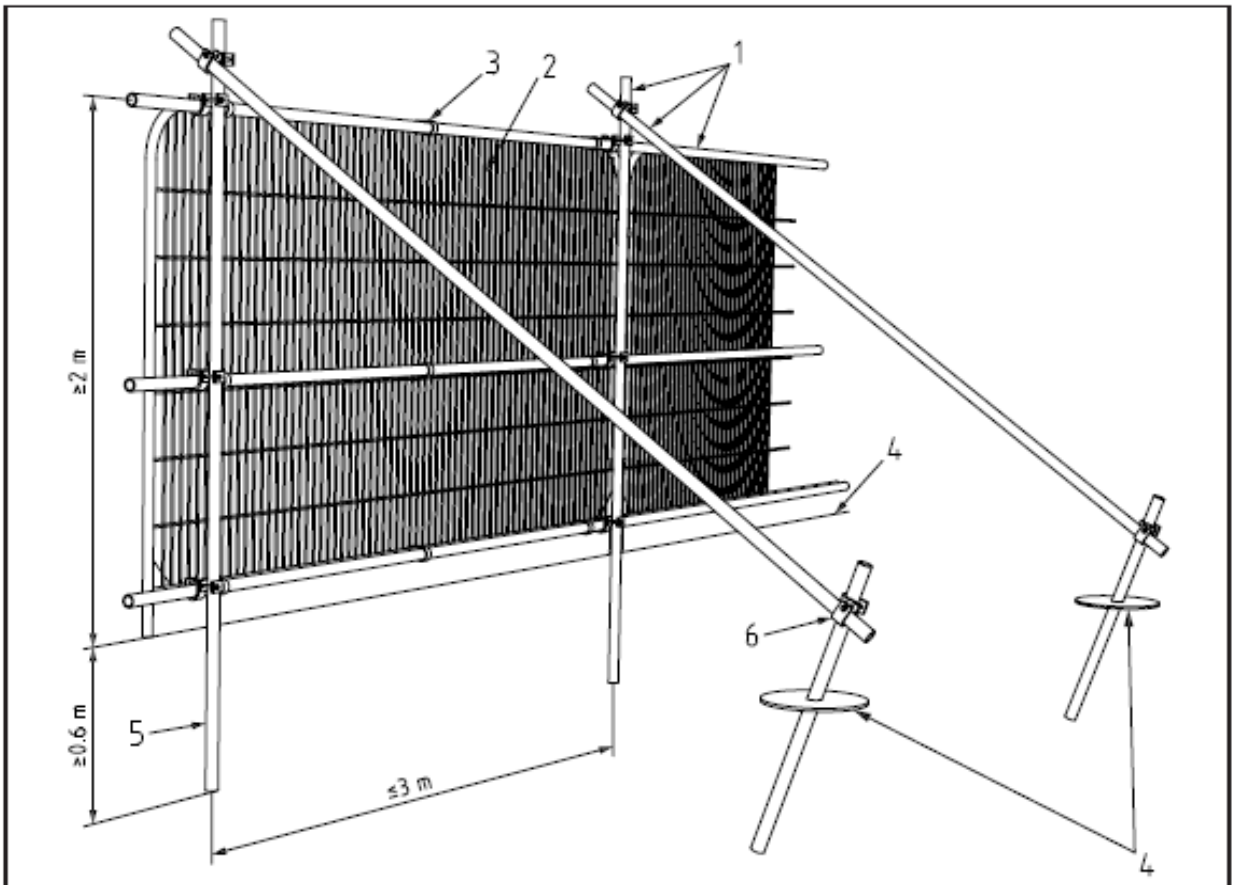

Key

1 Standard scaffold poles
2 Heavy gauge 2 m tall galvanized tube and welded mesh infill panels
3 Panels secured to uprights and cross-members with wire ties
4 Ground level
5 Uprights driven into the ground until secure (minimum depth 0.6 m)
6 Standard scaffold clamps

© Trevor Heaps Arboricultural Consultancy Ltd.

Photo 1: A worked example of the default specification for protective barrier (BS 837:2012)

Durable, all-weather signs are to be attached to the fencing (an example sign is provided below). These shall be printed, laminated and attached at regular intervals along the fencing.

Once erected, the protective fencing is to be regarded as sacrosanct and there is to be no access into the area protected by it - the construction exclusion zone (CEZ).

The protective fencing is to be maintained in good order, so it is fit for purpose throughout the construction process. The fencing will not be altered in any way, or prematurely removed without prior consent of the project arboriculturist and/or (if necessary) the LPA arboricultural officer.

Where specified in the AMS, the tree(s) stem/s shall be boxed off with wooden ply boards or wrapped in hessian and chestnut pale fencing / trunk protection (see example below). This will help avoid any direct damage to tree stems from passing machinery (see photo 2).

© Trevor Heaps Arboricultural Consultancy Ltd.

Photo 2: Trees protected by hessian & chestnut pale fencing / limbs protected by wooden boxing

Photo 2. https://greengridsystems.com/products/trunk-protecta

© Trevor Heaps Arboricultural Consultancy Ltd.

TREE PROTECTION FENCING

KEEP OUT

This fencing must not be removed

or altered in any way without prior consultation with the project arboriculturist!

Please report any damage to trees and/or fencing to the site manager or the project arboriculturist

Trevor Heaps

07957 763 53

© Trevor Heaps Arboricultural Consultancy Ltd.

Soft landscaping within or close to the Root Protection Areas (RPAs) of retained trees

The following precautions are necessary to avoid damage to trees (where activities are to take place within their RPAs):

- Ground levels will not be changed;
- Soil must be of good quality and free of contaminants and other foreign objects potentially injurious to tree roots. The topsoil must satisfy the requirements of BS3882:200;
- No heavy machinery will be operated within the RPAs of retained trees during the installation of soft landscaping;
- Unwanted vegetation shall be removed manually or by using systemic herbicide that will not damage tree roots;
- No fuels or chemicals shall be used or stored within these areas; and
- No irrigation or drainage pipes shall be installed within the RPAs

© Trevor Heaps Arboricultural Consultancy Ltd.

Appendix 4b – Specifications for site-specific tree protective measures

Floating raft foundation for light structures (sheds, car ports, cycle / bin stores etc)

Light structures do not normally require substantial foundations and, where required, can be designed to have permeable bases; which should be of a no-dig, load-spreading construction set directly on to the existing soil surface (or fixed directly onto an existing hard surface).

A flat base will be required and so if the existing soil surface is uneven or sloping, it shall be levelled by removing no more than 50mm height of soil from the elevated areas or raising sunken areas with no more than 50mm of soil.

When levelling raised areas, it will normally be acceptable to sever roots less than 25 mm in diameter. If larger roots are found, the preferred course of action would be to raise the base level of the structure by filling rather than by cutting roots. However, if this is not practical and large roots have to be cut, the situation shall be discussed with a suitably qualified arboriculturist before a final decision is made.

Light covering structures can also be fixed onto a frame that can rise directly from the base or be fixed to supports either banged into the ground or set in carefully in hand-dug holes. Provided the supports are well spaced, i.e. greater than 1.5m apart, and of a relatively narrow diameter, i.e. not more than 15cm, it is unlikely they will cause any significant disturbance to RPAs.

Impermeable liners will be laid between the ground and the pouring of the concrete to prevent soil contamination.

© Trevor Heaps Arboricultural Consultancy Ltd.

Appendix 5 – General precautions and further information

Figure 4: Common problems for trees on development sites
(http://www.leics.gov.uk/highway_req_development_part7_appendix_f)

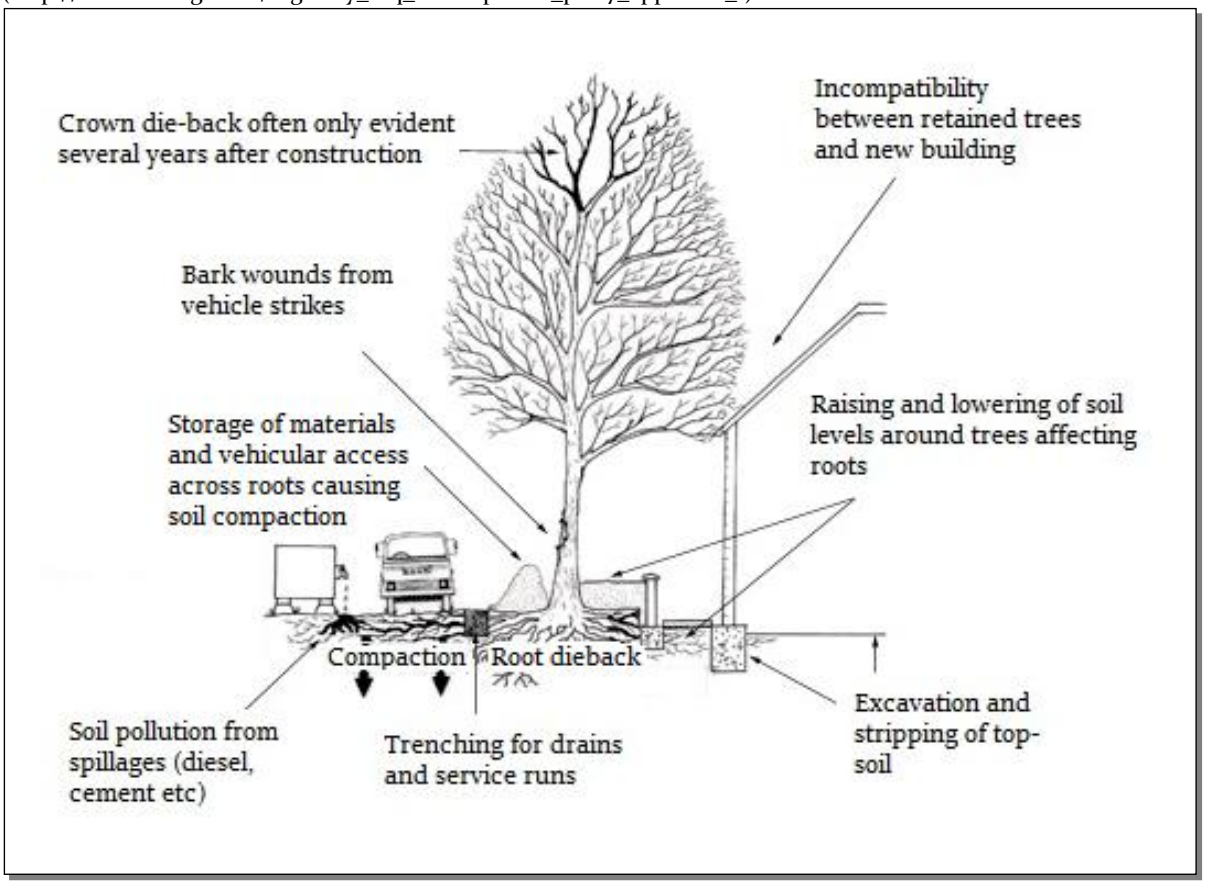

5.1 Services and drainage: Surface run-off water shall be sent to existing drains and/or soakaways located outside the RPAs of retained tree(s). If trenching is required within the RPA of retained trees to provide routes for services, this work shall be undertaken using mole boring and / or hand digging (under arboricultural supervision).

5.2 Storage of materials: No materials or spoil are to be stored within areas protected by protective fencing and/or ground protection. The same applies for existing hard surfaces that are being used as ground protection.

5.3 Spillages: If any cement residues fall within root protection areas, it shall be swept up, bagged and removed from site – it shall <u>not</u> be washed away with water.

5.4 Demolition: Where any existing structures are to be demolished, they will be done so inwardly (away from root protection areas / retained soil).

© Trevor Heaps Arboricultural Consultancy Ltd.

5.5 Levels: There is to be no alteration of ground levels within the area protected by protective fencing and/or ground protection, unless previously specified and agreed upon. The same applies for existing hard surfaces that are being used as ground protection.

5.6 Fires: No fires are to be lit within 20 metres of the stems of retained trees.

5.7 Above ground damage to trees: Care must be taken in planning the location and operation of machinery to avoid above ground damage to trees. BS5837 (2012) Section 6.2.4.1 states '*Planning of site operations should take sufficient account of wide loads, tall loads and plant with booms, jibs and counterweights (including drilling rigs) in order that they can operate without contacting retained trees. Such contact can result in serious damage to trees and might make their safe retention impossible. Consequently, any transit or traverse of plant in proximity to trees should be conducted under the supervision of a banksman, to ensure that adequate clearance of trees is always maintained. Access facilitation pruning should be undertaken where necessary to maintain this clearance.*

5.8 Remedial works and soil improvement: Exposed soils are easily compacted resulting in loss of water and gaseous exchange; this can lead to root death (and subsequently tree death).

5.8.1 To relieve ground compaction, which may have resulted from the use of vehicles or by the storage of materials, the soils should be broken up to allow air to penetrate and for the soil structure to be restored. There are various methods to achieve this, such as: auguring the soil by hand / fork or pneumatic excavation (e.g. with an air spade); both should be combined with soil structure improvements (see 5.8.2).

5.8.2 The soil structure can be improved by incorporating a compost or mulch within the topsoil, of 75-100mm in depth. This can be spread over the surface and gently forked into the soil. If bark chip is used as mulch, NPK fertilizer should be added to counteract the nitrogen depletion of the soil. There is also the option of adding mycorrhizal fungal which may also improve root function.

5.9 Choosing an arborist: When appointing a tree works contractor, please only use properly qualified and experienced companies who comply with current British Standards (3998) and always check that they carry Public Liability Insurance within a minimum of £2,000,000 cover, and the relevant Employers Liability Insurance. A list of contractors approved by the Arboricultural Association can be found at www.trees.org.uk or by calling 01242 522 152.

© Trevor Heaps Arboricultural Consultancy Ltd.

Appendix 6 - Procedure to follow in case of damage to retained trees

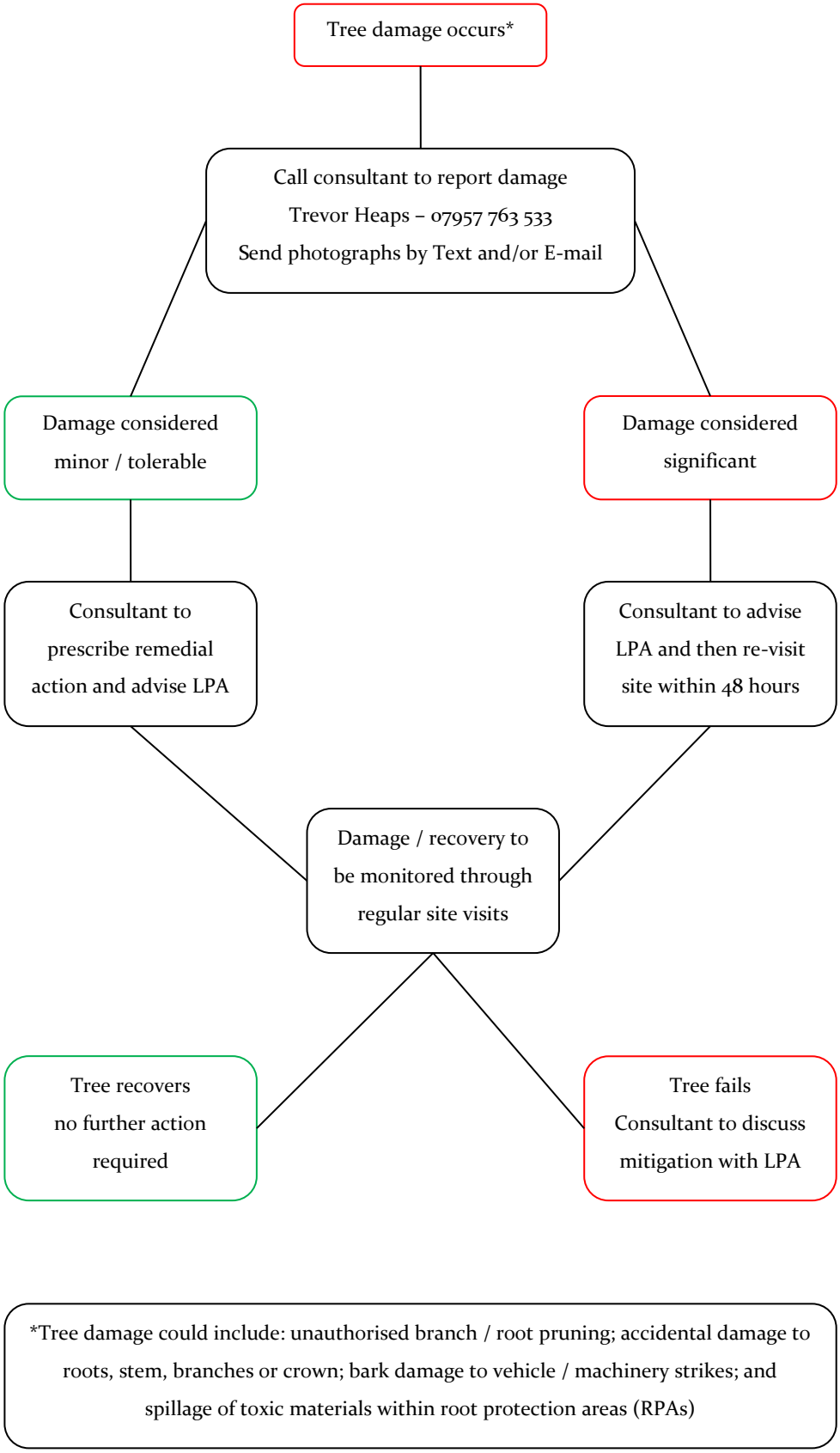

*Tree damage could include: unauthorised branch / root pruning; accidental damage to roots, stem, branches or crown; bark damage to vehicle / machinery strikes; and spillage of toxic materials within root protection areas (RPAs)

© Trevor Heaps Arboricultural Consultancy Ltd.

Appendix 7 - Induction form for all site personnel

Site name: .....

App. No.: .....

Appointed Site Supervisor: .....

- I have had explained to me by the Site Manager the key implications of the Arboricultural Method Statement relating to the development at the above site.

- I am aware that trees have shallow roots and any excavation works beneath the canopy could cause irreparable damage.

- I am aware that the tree protective fencing / ground protection must remain in its original position and must not be moved without the approval of the appointed Arboricultural Consultant.

- I understand that certain operations must be supervised by the appointed Arboricultural Consultant and that these must not start until the consultant is present and has given approval.

- I confirm that I will bring any concerns about potential damage to trees to the attention of the Site Manager.

- I am aware that I must not cause damage to any of the retained trees on or adjacent to the site. Damage may be caused by direct means (i.e. physical damage caused to roots or the trunk/branches of the tree) or by indirect means (e.g. by fire or toxic materials entering the rooting environment of the tree).

Print Name: .....

Sign Name: .....

Date: .....

© Trevor Heaps Arboricultural Consultancy Ltd.

Appendix 8 - Site inspection record

Date: Time: ..... Site:	Planning reference: .....

Those present in addition to project arboriculturist:

Client / Agent: .....

Project / Site manager: .....

LPA arboricultural officer: .....

Other (specify): .....

	Yes	No	Notes
Tree protection measures located in accordance with TPP?			
Any disturbance within construction exclusion zone?			
Any materials stored within construction exclusion zone?			
Any evidence of damage to tree roots, stems or canopies?			
Any works programmed before next planned site visit that may affect retained trees? (if yes, provide details below)			

Additional site visit required to ensure compliance with required action? (Y / N)
Proposed visit date:

Signed: Date:

© Trevor Heaps Arboricultural Consultancy Ltd.

Appendix 9: Tree Protection Plan

At this site, operations are to occur in the following sequence:

1. Carry out tree work operations highlighted yellow in the tree data schedule (Appendix 2). All tree works are to be carried out by a competent and experienced arborist to current British Standards (see Appendix 5.9 for assistance finding a suitable arborist).

2. Erect protective fencing along the position(s) shown by the dashed red line/s on the TPP.

3. Lay ground protection and/or retain suitably hard-wearing existing hard surfaces within the area(s) shown by the diagonal blue lines on the TPP.

4. Retain all existing hard surfaces as shown by the sandy coloured squares on the TPP.

5. Provide a photographic record of all tree protection to arboricultural consultant - this will be forwarded to and approved by the Council's Arboricultural Officer and must demonstrate that all aspects of tree and ground protection measures have been implemented in accordance with this Arboricultural Report. The tree protection measures shall be retained until completion of all works permitted.

6. Commence construction.

7. Remove tree protection when all construction activity has ended.

8. Carry out tree / shrub planting and any other landscaping works (including laying of floating concrete raft foundations for bin-store and extra care to be taken during the shallow excavations needed for the new rear path).

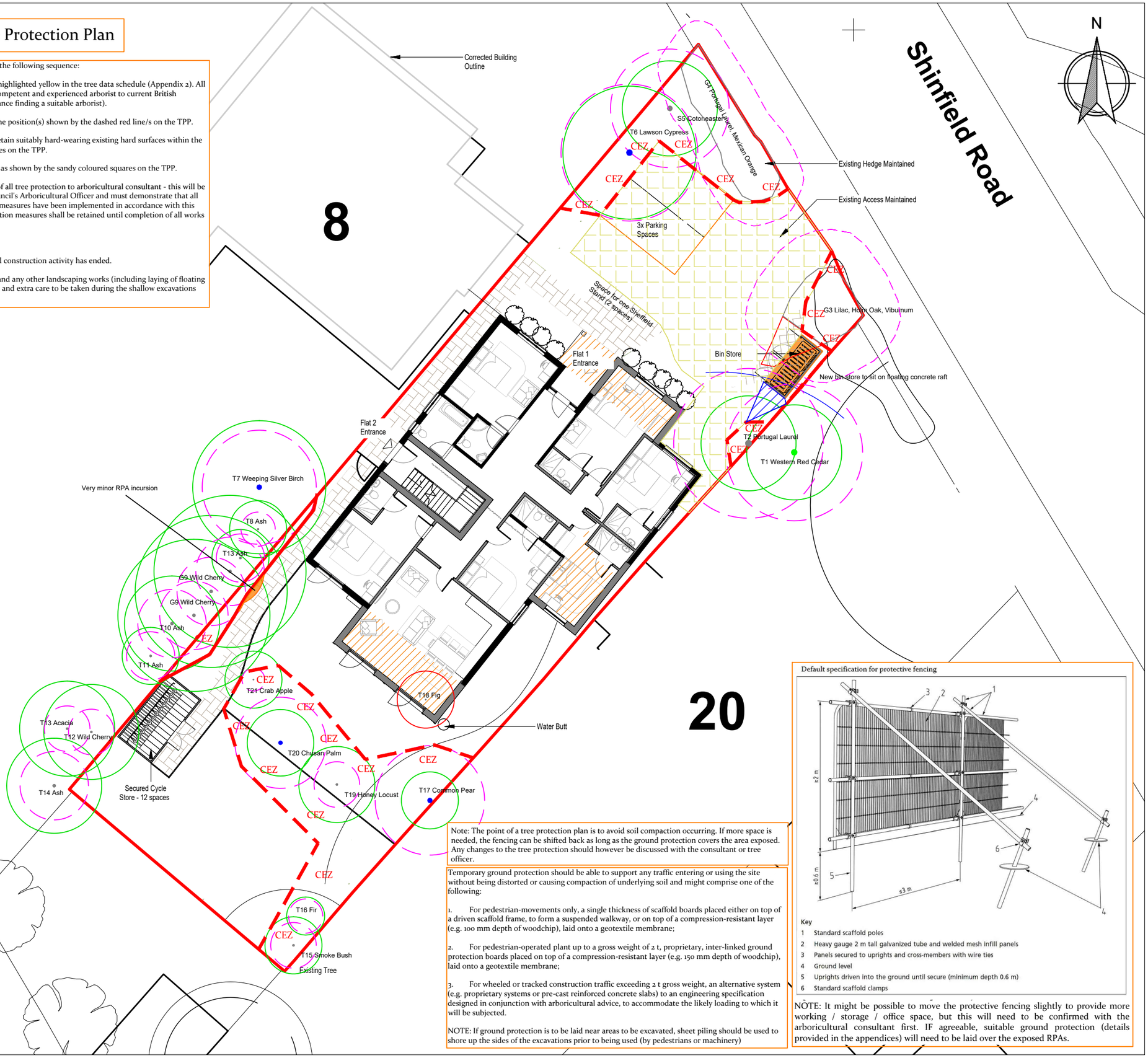

Note: The point of a tree protection plan is to avoid soil compaction occurring. If more space is needed, the fencing can be shifted back as long as the ground protection covers the area exposed. Any changes to the tree protection should however be discussed with the consultant or tree officer.

Temporary ground protection should be able to support any traffic entering or using the site without being distorted or causing compaction of underlying soil and might comprise one of the following:

1. For pedestrian-movements only, a single thickness of scaffold boards placed either on top of a driven scaffold frame, to form a suspended walkway, or on top of a compression-resistant layer (e.g. 100 mm depth of woodchip), laid onto a geotextile membrane;

2. For pedestrian-operated plant up to a gross weight of 2 t, proprietary, inter-linked ground protection boards placed on top of a compression-resistant layer (e.g. 150 mm depth of woodchip), laid onto a geotextile membrane;

3. For wheeled or tracked construction traffic exceeding 2 t gross weight, an alternative system (e.g. proprietary systems or pre-cast reinforced concrete slabs) to an engineering specification designed in conjunction with arboricultural advice, to accommodate the likely loading to which it will be subjected.

NOTE: If ground protection is to be laid near areas to be excavated, sheet piling should be used to shore up the sides of the excavations prior to being used (by pedestrians or machinery)

Default specification for protective fencing

Key
1 Standard scaffold poles
2 Heavy gauge 2 m tall galvanized tube and welded mesh infill panels
3 Panels secured to uprights and cross-members with wire ties
4 Ground level
5 Uprights driven into the ground until secure (minimum depth 0.6 m)
6 Standard scaffold clamps

NOTE: It might be possible to move the protective fencing slightly to provide more working / storage / office space, but this will need to be confirmed with the arboricultural consultant first. IF agreeable, suitable ground protection (details provided in the appendices) will need to be laid over the exposed RPAs.

Plan Legend

- Tree/s to be retained
- Tree/s to be removed
- Category A Tree
- Category B Tree
- Category C Tree
- Category U Tree
- Root Protection Area (RPA) If amended, the original is a dotted blue circle
- Approximate extent of shading on the spring and autumn equinoxes (am / pm)
- Protective fencing
- Stem boxed in with wooden plyboards to avoid accidental damage
- CEZ — Construction & storage exclusion zone
- Existing hard surface
- Ground protection or existing hard surface to remain
- RPA Incursion. See supporting report / plan notes
- 'No-dig', permeable surface constructed before work begins
- Ground protection during construction. 'No-dig', permeable surface after
- 'No-dig', permeable surface constructed at landscaping stage
- Location of proposed service trench
- Suggested tree planting locations

Scale: 1:200 @ A3 (0 – 4m – 8m)

Site Address: 10 Shinfield Road
Reading RG2 7BW

Client: Simran Luthra
Drawing No: TH/A3/5417/TPP

Date: 14/08/2025

Trevor Heaps
Arboricultural Consultancy Ltd
07957 763 533
trevor@trevorheaps.co.uk
www.trevorheaps.co.uk

End of Report