Arbortrack Systems Ltd
The Granary Studio
Crewe Lane
Kenilworth
Warwickshire
CV8 2LA

Telephone: 07986 122074
E-mail: james@arbortrackservices.com

Arboricultural Impact Assessment

& Method Statement:

47 Parkside Road

Reading

Berkshire

RG30 2BT

REPORT PREPARED FOR:

Mr Mark Barrett

Gables Homes Ltd

Armour House

Colthrop Lane

Thatcham

RG19 4PD

REPORT PREPARED BY

James Bell

MSc. (Env). Arbor. A. Tech. Cert.

Ref: jwmb/rpt3/47parkside/AIAAMS

Date: 31st July 2025

The content and format of this report are for the exclusive use of the client. It may not be sold, lent, hired out or divulged to any third party not directly involved in the subject matter without the written consent of Arbortrack Systems Ltd.

CONTENTS

1.0 Introduction 3

1.1 Purpose & Use of the Report 3
1.2 Terms of Reference 3
1.3 Tree Survey 3
1.4 Development Proposals & Impact Assessment 4
1.5 Sequence of Works 4
1.6 Site Supervision 5
1.7 Site Monitoring & Contact Information 5
1.8 Statement Adoption 5

2.0 Pre-Development Site Preparation 6

2.1 Arboricultural Works 6
2.2 Preparation of Surfaces 6
2.3 Installation of Tree Protection Barrier 6
2.4 Pre-Development Site Inspection 6

3.0 Development Phase 7

3.1 General Precautions 7
3.2 Root Protection Areas 7
3.3 Site Access Accommodation & Storage 7
3.4 Routing & Installation of Services 7
3.5 Demolition Measures 8
3.6 Changes in Grade 8
3.7 Construction Measures 8
3.8 Removal of Tree Protection Barrier 8
3.9 Post-Construction Landscaping 8

4.0 Summary of Proposed Methods 9

4.1 Table of Impacts & Mitigation 9

5.0 Completion 9

5.1 Completion Meeting 9

Appendix A Tree Protection Plan
Appendix B Tree Survey Schedule & Recommended Tree Works
Appendix C Fencing Specification to BS5837:2012
Appendix D Glossary & General Guidelines
Appendix E Further Information on 'No Dig' Construction
Appendix F Photo of Tree 16 Showing Hazel Stem for Removal

1.0 Introduction

1.1 Purpose & Use of the Impact Assessment & Method Statement

1.1.1 This arboricultural impact assessment & method statement report has been prepared for submission to Reading Borough Council (RBC) to accompany a planning application for the construction of two semi-detached residential properties in the rear garden of 47 Parkside Road, Reading, Berkshire, RG30 2BT. This statement is intended to demonstrate the feasibility of construction without harm to the retained tree resource on and adjoining the site. See the material accompanying this report for full scheme details.

1.1.2 This document lays down the methodology for any proposed works that may have an effect upon the trees on and adjacent to the site. It is essential within the scope of any contracts related to the development proposals that this method statement is observed and adhered to. It is recommended that this document form part of the work schedule and specification issued to the building contractors and can be used to form part of the contract.

1.1.3 Copies of this document should be available for inspection on-site. The developer will inform the local planning authority within twenty-four hours if the designated arboriculturist is replaced.

1.2 Terms of Reference

1.2.1 I am instructed by Mr Mark Barrett of Gables Homes Ltd to prepare an arboricultural impact assessment & method statement report to accompany a planning application for the construction of two semi-detached residential properties in the rear garden of 47 Parkside Road, Reading, Berkshire, RG30 2BT with reference to British Standards publication: Trees in relation to design, demolition & construction - Recommendations (BS5837:2012).

1.2.2 The tree protection plan at Appendix A is based on Proposed Site Layout drawing reference 18034-2025.07.30 P01 from The Harris Partnership Ltd, 101 London Road, Reading, RG1 5BY.

1.3 Tree Survey

1.3.1 A BS5837:2012 survey of the trees near the proposals was conducted on 6th March 2024 and 10th February 2025 by James Bell of Arbortrack Systems Ltd. Full tree survey data is provided at Appendix B.

1.3.2 Data from the iGeology app from the British Geological Survey suggests that it is likely that the site has a bedrock geology of Lambeth Group - Clay, silt and sand with a superficial geology of Lynch Hill Gravel Member - Sand and gravel. The prevailing soil conditions evidently provide a reasonable medium for tree growth. Any potential for soil compaction (highly deleterious to root function) during development will depend on the proportion of clay present in the upper profile. The presence of clay in this location would appear to be likely but cannot be confirmed. Further to confirmation of the precise soil type present, a structural engineer may be able to advise further on the local geology and its implications, if any, for development.

1.3.3 No Ancient Semi-Natural Woodland (ASNW) is present near the site: see the Department for Environment Fisheries & Rural Affairs (DEFRA) MAGIC website for details at http://magic.defra.gov.uk/MagicMap.aspx.

1.3.4 The status of surveyed trees has not been established with RBC, but data on the RBC website indicates that the site is not within a Conservation Area (CA) and that none of the surveyed trees are subject to a Tree Preservation Order (TPO).

1.4 Development Proposals & Impact Assessment

1.4.1 The proposals are for the construction of two semi-detached residential properties with associated hardstanding & off-road parking with access off Wingrove Road. See the proposed layout at Appendix A and the accompanying material for full details.

1.4.2 The surveyed trees, standing in what is currently the rear garden of 47 Parkside Road, are almost exclusively low-quality early-mature broadleaves and garden fruit trees, which deliver a limited amount of visual amenity to the environs.

1.4.3 Low-quality garden fruit trees 22, 23 & 24 will be removed to allow or facilitate development. The loss of these trees is a low and acceptable impact. Replacement planting is policy compliant, i.e. on a 3:1 basis. Three trees are proposed for removal, and nine trees are proposed for replacement. See the plan at Appendix A for the locations of the proposed planting. The replacement of the existing unattractive white painted breeze block boundary wall with the proposals is, in our opinion, a marked improvement on the current street scene.

1.4.4 The orientation of trees 16-20 to the proposed footprints is favourable in terms of daylight & sunlight. Removal of the hazel branch (tree 16), shown at Appendix F, will improve the quality of the rear garden space but not detract from the limited amenity contribution made by trees along the northern boundary of the site to adjoining gardens.

1.4.5 Tree 29, a small-leaved lime cultivar (cv), is a marginal moderate/low quality garden ornamental with a balanced, rounded crown (barring one slightly more extended branch to the west in the lower crown). Minor tip pruning of the western crown of this tree is recommended to maintain adequate separation between its crown and the proposals. The juxtaposition between this tree and the proposals is acceptable and sustainable hereafter, with minimal ongoing maintenance.

1.4.6 New paths will be constructed to a 'No Dig' specification where indicated on the plan at Appendix A.

1.4.7 Site works will principally take place beyond the root protection areas (RPAs) of retained trees and canopies. Retained trees will be protected throughout the course of development by fencing to the specification recommended by BS5837:2012 - see Appendix C for details.

1.5 Sequence of Works

1.5.1 The sequence of works should be as follows:

- tree works required to allow or facilitate development – see Appendix B
- erection of tree protection barrier (TPB) – see Appendix A
- laying of service runs
- main construction phase, including 'No Dig' construction of path
- removal of TPB
- soft landscaping

1.6 Site Supervision

1.6.1 An individual, e.g. the Site Agent, must be nominated to be responsible for all arboricultural matters on site. This person must:

- be present on-site for the majority of the time
- be aware of the arboricultural responsibilities
- have the authority to stop any work that is causing, or has the potential to cause, harm to any retained tree
- be responsible for ensuring that all site operatives are aware of their responsibilities toward trees on site and the consequences of the failure to observe these responsibilities
- make immediate contact with the local authority and/or the designated arboriculturist in the event of any tree-related problems occurring, whether actual or potential

1.7 Site Monitoring

1.7.1 The site agent will be responsible for monitoring all arboricultural works, inspecting protective fencing and monitoring all on-site works in the context of tree protection. The designated arboriculturist will be available for site visits on a basis to be agreed upon between the client and planning authority when/if appropriate or required, i.e. if required by condition. It is recommended that a record of site visits is maintained for inspection on-site and copies forwarded to the developer/agent and to the local planning authority. A certificate of practical completion can be produced for sites deemed by all parties to merit this.

1.7.2 It is the responsibility of the client to advise Arbortrack when the project begins and to forward on the approval notice when published on the planning portal, should supervision requirements be stipulated.

1.7.3 Principal contact information: 1/. Mr James Bell. Arbortrack Systems Ltd. Arboricultural Consultant. 07986 122074. 2/. Ms Sarah Hanson. RBC Arboricultural Officer. 01189 372 440. 3/. Site agent. Details to be advised. 4/. Ms Tanya McLeod. The Harris Partnership Ltd. Architect. 0118 950 7700. tanyamcleod@harrispartnership.com. 5/. Mr Mark Barrett. Gables Homes Ltd. 07774 112681.

1.8 Statement Adoption

1.8.1 It is recommended that, in due course, acceptance of the recommendations in this report is demonstrated by, for example, the architect specifying in writing to the building contractor that tree care conditions apply in the execution of the contract and by an estimate or written undertaking from the contractor to the architect demonstrating that the practical aspects of observation of such recommendations have been priced in.

1.8.2 If conflicts between any part of a tree and the proposals arise during the course of development, these can often be resolved quickly and at little cost if a qualified arboriculturist is consulted promptly. Lack of such care is often apparent quickly, and the decline and death of such trees can spoil design aims and can, of course, affect saleability, as well as reflecting poorly on the construction and design personnel involved. Trees that have been the recipients of careful handling during construction add considerably to the appeal and value of the finished development.

2.0 Pre-Development Site Preparation

2.1 Arboricultural Works

2.1.1 See Appendix B for full details of tree works required to allow or facilitate development.

2.2 Preparation of Surfaces

2.2.1 If the 'No Dig' pathway is constructed at the end of the build, then ground protection must be used throughout the course of the build until final surfaces can be laid. Ground protection should be fit for purpose as per the guidance in BS5837:2012 section 6.2.3.3. The preferred specification is provided by products such as Trak Mat; see www.multimatts.co.uk. Alternatively, many other treatments are available, e.g. those provided by InfraGreen Solutions: see www.infragreen-solutions.com.

2.3 Installation of Tree Protective Barrier

2.3.1 The tree protection barrier (TPB) must be comprised of a vertical and horizontal scaffold framework, braced to resist impacts, with vertical tubes spaced at a maximum level of 3m. On to this, weldmesh panels should be securely fixed with wire scaffold clamps: see section 6.2.2 and Figure 2 of BS5837:2012 (Appendix C). The suggested location(s) of the TPB is shown in Appendix A.

2.3.2 This TPB is to be erected before any construction work commences on site, is to remain 'in situ' and undamaged for the duration of all work or each phase, and is only to be removed once all work is completed. If any work other than preparatory tree work is deemed necessary prior to the erection of fencing, the designated arboriculturist should be informed to enable his/her presence to oversee the work being carried out.

2.3.3 The only other exception is the completion of soft landscaping, but if any excavations, however minor, are to be carried out as part of soft landscaping within RPAs, an arboricultural assessment must be carried out beforehand, and any arboricultural protection measures incorporated. The TPB should carry waterproof warning notices denying access within RPAs.

2.3.4 The Tree Protection Plan in Appendix A illustrates where the protective fencing should be located to form the boundary of the Tree Protection Zone (TPZ). The TPZ is an exclusion zone, and suitable steps should be taken to prevent access by pedestrians and vehicles and the storage of any works materials and equipment should be located outside of the TPZ.

2.4 Pre-Development Site Inspection

2.4.1 At the instigation of the client/site agent or RBC, upon the erection of the fencing, the designated arboriculturist will meet the relevant local authority member on-site to check the standard of the work(s). If there are any amendments required to the protective fencing, these will be agreed upon at this meeting, confirmed in writing, and undertaken thereafter.

3.0 Development Phase

3.1 General Precautions

3.1.1 No fires shall be made on any part of the site or within 10m of the furthest extent of the canopy of any tree or group tree to be retained on-site or on land adjoining.

3.1.2 No spilling or pouring of fuels, oils, solvents, or tar shall be made on any part of the site.

3.1.3 No materials that are likely to have an adverse effect on tree health, such as oil, bitumen or cement, will be stored or discharged within 10 metres of the trunk of a tree that is to be retained.

3.1.4 No spillage or discharge of wet mortar or concrete shall be made on any part of the site.

3.1.5 No storage of materials shall be made within the protective fences.

3.1.6 No breaching or moving of the protective fences shall occur without the approval of the designated arboriculturist.

3.1.7 Alterations in levels within the tree protection fence areas shall be avoided.

3.2 Root Protection Areas

3.2.1 The RPA is a desirable zone of protection around the trees' rooting system, and these have been marked on the plan in Appendix A. The RPAs will lie within the TPZ and, therefore, be fully fenced off (see Appendix A) unless appropriate ground protection is offered, or the impact on the RPA is deemed very low and acceptable.

3.3 Site Access, Accommodation & Storage

3.3.1 Many site activities are potentially damaging to trees, e.g. material storage, parking, soil compaction and the use of plant machinery. In this latter example, particular care is required to ensure that the operational arcs of excavation and lifting machinery, including their loads, do not physically damage trees when in use or while accessing the site.

3.4 Routing & Installation of Services

3.4.1 New service runs should avoid RPAs of retained trees where possible. If unavoidable, any trenches within the RPAs of site trees should be hand-dug and kept as narrow as possible. They should not extend to within 1m from the base of any retained tree trunk. Exposed roots larger than 25mm in diameter should be retained with their bark intact and, when exposed, wrapped in dry hessian sacking.

3.4.2 Where crown interference with mature trees is a possibility, over-ground services will be routed in an alternative direction. In relation to this, any landscaping taking place should accommodate the presence of over-ground services and take mature tree size into account.

3.5 Demolition Measures – n/a

3.6 Changes in Grade

3.6.1 The upper layer of topsoil (top 60cm) contains the majority of a tree's roots, and if this is disturbed by a change in ground level, serious damage can be caused. On this basis, as a minimum, level changes should be avoided within RPAs.

3.6.2 If any significant section of ground level requires raising within RPAs, this should be achieved using coarse, granular material such as pebbles. See section 7.4.4.4 of BS5837:2012.

3.6.3 If ground levels need to be altered within 1.5 metres of any tree trunk, prior agreement must be sought from and given by the local authority tree officer.

3.7 Construction Measures

3.7.1 Minimum areas of pathway within the RPAs of trees 25-27 should be constructed to a 'No Dig' specification. Surfaces should be porous to allow water infiltration & gaseous exchange. Various products are available with warranty & guarantees: contact providers for full details. If 'No Dig' surfaces are laid at the end of the build, then ground protection will be required throughout the course of the build. See Appendix E for further guidance.

3.8 Removal of Tree Protective Barrier

3.8.1 The protective fencing may be removed only upon completion of the development phase when all drainage and service runs have been installed and any site machinery has been removed.

3.9 Post-Construction Landscaping

3.9.1 Following the development phase, retained trees may be subject to either landscaping or seeding beneath their canopies.

3.9.2 Any approved landscaping works should avoid the changing of ground levels or deep digging in the vicinity of trees except where already approved. Mechanised cultivation, such as tractor-mounted rotovation, must not be used within the RPA of retained trees.

3.9.3 Heavy machinery should not be used in the vicinity of any retained trees unless adequate ground protection is in place.

3.9.4 If herbicides are to be used, they should be appropriate to their purpose and not used in such a way as to damage any retained trees or vegetation.

3.9.5 Ideally, retained trees should be within a shrub area as this reduces the chances of compaction and disturbance of root systems.

4.0 Summary of Proposed Methods

4.1 Table of Impacts and Mitigation

4.1.1 The table below summarises the main areas where trees could become damaged by the proposed development and the methods that need to be adopted in order to prevent such damage:

Impact	Mitigation	Reference	Trees Affected
Passage of machinery and storage of materials over RPAs	Construction of protective fencing to acceptable standards	Sections 2.3. Fencing spec Appendix C, Tree Protection Plan Appendix A	14-21, 25-27 & 29
New hard standing within RPA	New pathway installed to specialist 'No Dig' construction specification	Sections 2.2.1, 3.7.2 & Appendix E	25-27

5.0 Completion

5.1 Completion Meeting

5.1.1 Following completion of the approved works on site, the designated arboriculturist can meet with a local authority representative and agree upon any remedial works deemed necessary (if any).

5.1.2 Any works agreed upon in the above meeting will be confirmed in writing and should be performed to BS3998:2010.

5.1.3 Any work proposed post-development should be checked to avoid a penalty for performing illegal work on a protected tree.

APPENDIX A

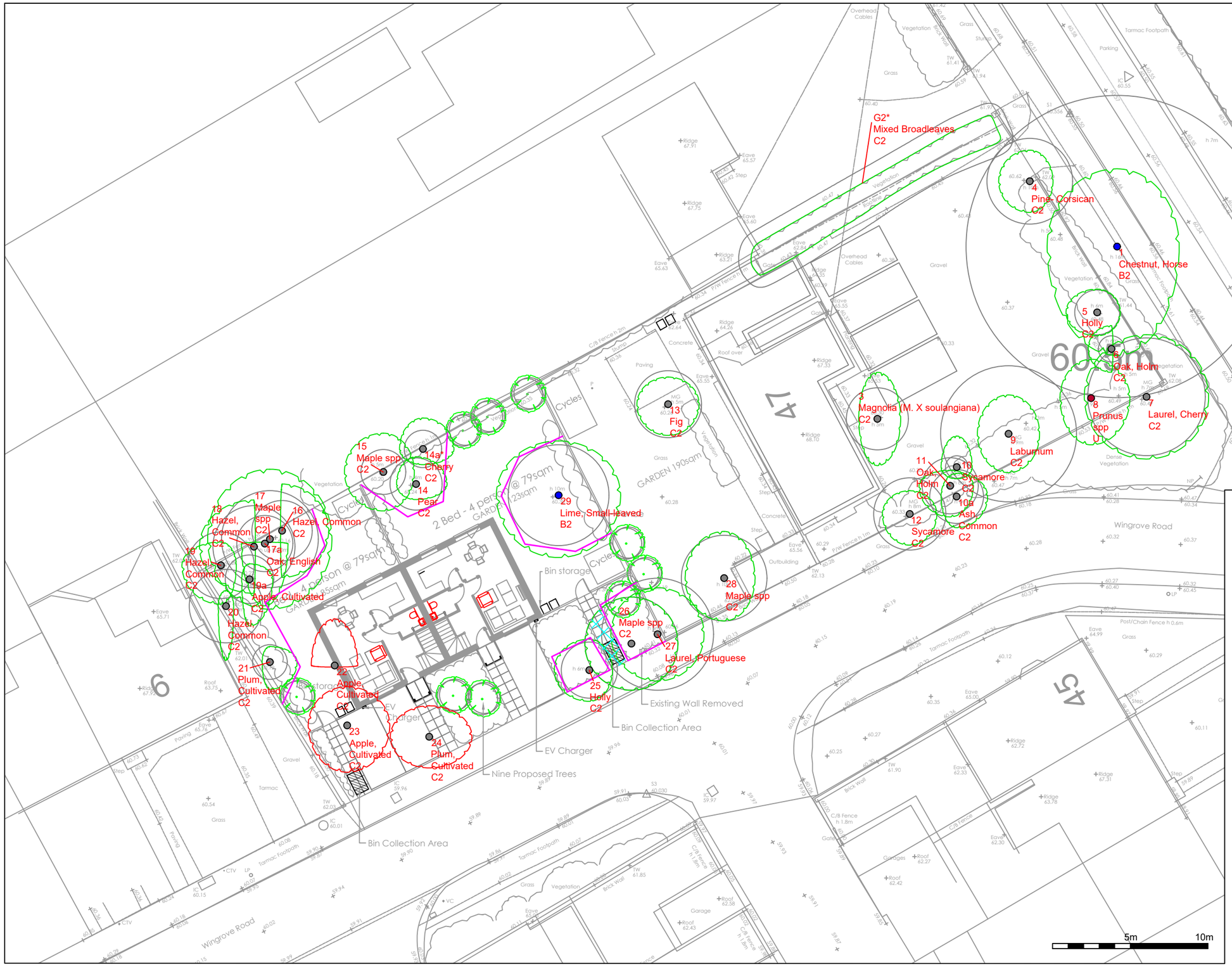

Arbortrack Systems Ltd

The Granary Studio, Crewe Lane, Kenilworth, CV8 2LA
07986 122074 / james.bell@arbortrack.com

Site: 47 Parkside	
Drawing Title: Tree Protection Plan	1:250 @ A3
Appendix: A	Rev F, July 2025

Key:

- Category A
- Category B
- Category C
- Category U

Category — Crown Spread
Root Protection Area — 13 Birch B2 — Tree Number, Species, Category

NOTE: Tree/group numbers marked with an * have approximate locations.

Tree Proposed for Removal

Proposed Planting

Tree Protection Fencing

No Dig Construction or Ground Protection and No Dig Thereafter (minimum area required)

Do not scale from this drawing. Please check all dimensions on site and notify us of any discrepancies.
This drawing was produced in colour. Do not rely on monochrome copies or those reduced in size.
This drawing is copyright [Arbortrack Systems Ltd] and may not be used or changed without the written consent of Arbortrack Systems Ltd.

APPENDIX B

Site: 47 Parkside Road Readinng

Date: 10th February 2025

Appendix B

BS5837:2012 Tree Survey Schedule

Arbortrack Systems Ltd

07986 122074

Surveyor(s): James Bell

Ref: jwmb/rpt3/47parkside/AIAAMS

Tree No.	English Name	Height	Crown Spread N	Crown Spread S	Crown Spread E	Crown Spread W	Ground Clearance	Stem Diameter	Protection Radius	Age Class	Growth Vitality	Structural Condition	B.S. Cat	Sub Cat	Useful Life	Comments
1	Chestnut, Horse	14	5	7	4	4.5	2	810	9.7	Mature	Moderate	Fair	B	2	20+	Early dieback in upper crown Pruning wounds Street tree tbc; bifurcation @ 2.5m; ivy clad; pruning wounds
G2	Mixed Broadleaves	2.5	1	1	1	1	0	150 #	1.8	Semi-mature	Moderate	Fair	C	2		Boundary screen Yew, beech, ivy, pyracantha & cherry laurel
3	Magnolia (M. X soulangiana)	4.5	3	3	1.5	1.2	2.25	166	2.0	Semi-mature	Moderate	Fair	C	2	10+	Garden ornamental Minor deadwood
4	Pine- Corsican	8	2	2	1.5	2	2.5	230	2.8	Semi-mature	Normal	Good	C	2	>40	High FGP; nice tree but planted in wrong location
5	Holly	4.5	1.5	1.5	1.5	2	0	120	1.4	Young	Normal	Good	C	2	20+	
6	Oak, Holm	3.5	1.5	1.5	0	1.5	2	70	0.8	Young	Normal	Fair	C	2	20+	Sapling
7	Laurel, Cherry	7.5	4	4	4	4	0.5	315	3.8	Early Mature	Normal	Good	C	2	10+	Offsite

Site: 47 Parkside Road Readinng

Date: 10th February 2025

Appendix B

BS5837:2012 Tree Survey Schedule

Arbortrack Systems Ltd

07986 122074

Surveyor(s): James Bell

Ref: jwmb/rpt3/47parkside/AIAAMS

Tree No.	English Name	Height	Crown Spread N	Crown Spread S	Crown Spread E	Crown Spread W	Ground Clearance	Stem Diameter	Protection Radius	Age Class	Growth Vitality	Structural Condition	B.S. Cat	Sub Cat	Useful Life	Comments
8	Prunus spp	7.5	2.5	3	2.5	2	3	290	3.5	Mature	Poor	Poor	U		<10	A sparser than normal canopy Dying back (uniform) Pink blossom: might be an almond
9	Laburnum	7	2.5	2.5	2	2	4	365	4.4	Mature	Normal	Fair	C	2	10+	3 trunks removed @ base Dead ivy
10	Sycamore	4	2	.75	1	1	2	60	0.7	Young	Normal	Fair	C	2	>40	
10a	Ash, Common	3.75	1.5	2	2	1	1	144	1.7	Semi-mature	Normal	Fair	C	2	10+	Vulnerable to chalara
11	Oak, Holm	7.5	1	2	1.5	2	0.5	150	1.8	Semi-mature	Normal	Good	C	2	>40	Wrong location
12	Sycamore	5	1.5	2	1.75	1.75	1.5	193	2.3	Semi-mature	Normal	Good	C	2	20+	
13	Fig	3	1.75	2	2	2	1.75	179 #	2.1	Early Mature	Normal	Good	C	2	20+	

Site: 47 Parkside Road Readinng

Date: 10th February 2025

Appendix B

BS5837:2012 Tree Survey Schedule

Arbortrack Systems Ltd

07986 122074

Surveyor(s): James Bell

Ref: jwmb/rpt3/47parkside/AIAAMS

Tree No.	English Name	Height	Crown Spread N	Crown Spread S	Crown Spread E	Crown Spread W	Ground Clearance	Stem Diameter	Protection Radius	Age Class	Growth Vitality	Structural Condition	B.S. Cat	Sub Cat	Useful Life	Comments
14a	Cherry	5	2	1	2	1.5	2	100 #	1.2	Young	Moderate	Fair	C	2	10+	Trunk smothered in lonicera
14	Pear	2.75	1.75	1	2	1.25	1.5	140	1.7	Early Mature	Moderate	Fair	C	2	10+	Garden fruit tree Rather poor specimen
15	Maple spp	4.5	2.5	2.5	2	2.5	2	120	1.4	Young	Normal	Good	C	2	20+	Might be rubrum
16	Hazel, Common	5	3	3	3	0	2	162	1.9	Semi-mature	Normal	Good	C	2	10+	Ivy clad Asymmetry (major)
17	Maple spp	8.5	4.5	4.5	4	4	3	260	3.1	Early Mature	Normal	Good	C	2	20+	Ivy clad Could be rubrum again
17a	Oak, English	8.5	0	4	1.5	1.5	3	150	1.8	Young	Normal	Fair	C	2	20+	Ivy smothered Sapling Asymmetry (major)
18	Hazel, Common	4.5	3	3	0	3.5	2.5	220	2.6	Semi-mature	Normal	Good	C	2	20+	

Site: 47 Parkside Road Readinng

Date: 10th February 2025

Appendix B

BS5837:2012 Tree Survey Schedule

Arbortrack Systems Ltd

07986 122074

Surveyor(s): James Bell

Ref: jwmb/rpt3/47parkside/AIAAMS

Tree No.	English Name	Height	Crown Spread N	Crown Spread S	Crown Spread E	Crown Spread W	Ground Clearance	Stem Diameter	Protection Radius	Age Class	Growth Vitality	Structural Condition	B.S. Cat	Sub Cat	Useful Life	Comments
19	Hazel, Common	4.5	1.5	2.5	1	2.5	2	178	2.1	Semi-mature	Normal	Good	C	2	20+	
19a	Apple, Cultivated	2.5	1	3	1.5	.5	2	130	1.6	Semi-mature	Moderate	Fair	C	2	10+	Garden fruit tree
20	Hazel, Common	3.5	1	3.5	.5	.5	1	197	2.4	Early Mature	Moderate	Fair	C	2	10+	Suckering from base
21	Plum, Cultivated	2.5	1	1.75	1.75	0.5	0.5	93	1.1	Young	Moderate	Fair	C	2	10+	Garden fruit tree
22	Apple, Cultivated	2.75	3	0	1.5	1.5	0.5	210	2.5	Early Mature	Normal	Poor	C	2	10+	Lying prone to NNE
23	Apple, Cultivated	3.5	2.5	3	2.75	2.5	1.5	265	3.2	Early Mature	Normal	Good	C	2	20+	Garden fruit tree
24	Plum, Cultivated	3.5	2	2	2.75	2.5	1.5	127	1.5	Semi-mature	Normal	Fair	C	2	20+	Garden fruit tree Early flux @ base

Site: 47 Parkside Road Readinng

Date: 10th February 2025

Appendix B

BS5837:2012 Tree Survey Schedule

Arbortrack Systems Ltd

07986 122074

Surveyor(s): James Bell

Ref: jwmb/rpt3/47parkside/AIAAMS

Tree No.	English Name	Height	Crown Spread N	Crown Spread S	Crown Spread E	Crown Spread W	Ground Clearance	Stem Diameter	Protection Radius	Age Class	Growth Vitality	Structural Condition	B.S. Cat	Sub Cat	Useful Life	Comments
25	Holly	3.5	2	2	1.5	2.25	1.75	150	1.8	Semi-mature	Normal	Good	C	2	20+	Bark contusions
26	Maple spp	8	3	3	3	3	2	249	3.0	Semi-mature	Normal	Good	C	2	20+	Ivy clad
27	Laurel, Portuguese	4.5	3	3	3	3	1.75	300	3.6	Early Mature	Normal	Good	C	2	20+	
28	Maple spp	7.5	3	2.75	2	2.5	2.5	230	2.8	Semi-mature	Normal	Good	C	2	20+	Tight fork ID tbc
29	Lime, Small-leaved cv	8	3.5	4	4	4	2	270	3.2	Early Mature	Normal	Good	B	2	20+	Nice red shoots; minor basal suckers

Site: 47 Parkside Road Readinng

Date: 10th February 2025

Appendix B
Recommended Tree Works

Arbortrack Systems Ltd

07986 122074

Surveyor(s): James Bell

Ref: jwmb/rpt3/47parkside/AIAAMS

Tree No.	English Name	Height	Stem Diameter	Crown Spread				BS Cat	Sub Cat	Recommended Works	Comments / Reasons
				N	S	E	W				
16	Hazel, Common	5	162	3	3	3	0	C	2	Cut back/remove single branch to south for clearance - see photo at Appendix E	Ivy clad Asymmetry (major) To facilitate development
22	Apple, Cultivated	2.75	210	3	0	1.5	1.5	C	2	Remove	Lying prone to NNE To permit development
23	Apple, Cultivated	3.5	265	2.5	3	2.75	2.5	C	2	Remove	Garden fruit tree To permit development
24	Plum, Cultivated	3.5	127	2	2	2.75	2.5	C	2	Remove	Garden fruit tree Early flux @ base To permit development
29	Lime, Small-leaved cv	8	270	3.5	4	4	4	B	2	Tip prune western lower crown	Nice red shoots; minor basal suckers To facilitate development

Appendix B

Notes on Tree Survey Schedule:

- **Height** describes the approximate height of the tree measured in metres from ground level.
- The **Crown Spread** refers to the crown radius in metres from the stem centre and is expressed as an average of **NSEW** aspect if symmetrical.
- **Ground Clearance** is the height in metres of crown clearance above adjacent ground level.
- **Clear Stem Height** is the distance between trunk base and first branch separation measured in metres.
- **Stem Diameter** is the diameter of the stem measured in millimetres at 1.5m from ground level for single stemmed trees. See section 4.6 of BS5837:2012 for details of treatment for multistems.
- **Protection Radius** is a radial distance in metres measured from the trunk centre.
- **Growth Vitality** - **Normal** growth, **Moderate** (below normal), **Poor** (sparse/weak), **Dead** (dead or dying tree).
- **Structural Condition** - **Good** (no or only minor defects), **Fair** (remediable defects), **Poor** - Major defects present.
- **B.S. Category** refers to (British Standard 5837:2012 Table 1) and refers to tree/group quality and value; **'A'** - High, **'B'** - Moderate, **'C'** - Low, **'U'** - Unsuitable for Retention.
- **Sub Cat** refers to the retention criteria values where **1** is mainly **arboricultural** qualities, **2** is mainly **landscape** qualities and **3** is mainly **cultural** values including conservation.
- **Useful Life** is the tree's estimated remaining contribution in years.
- **First Significant Branch (FSB)** is the height of the first significant branch above ground level taken at the trunk separation point.

Notes on Recommended Tree Works:

- **1, 2, 3** Urgent (ASAP), Standard (6-12 months), Non-Urgent (2-3 years)
- **CB** Cut back to boundary/clear from structure
- **CL#** Crown lift to given height in meters
- **CT#%** Crown Thinning by identified %
- **CCL** Crown clean (remove deadwood/crossing & hazardous branches & stubs)
- **CR#%** Crown Reduce by given maximum percentage (of outermost branch & twig length)
- **DWD** Remove deadwood
- **Fell** Fell to ground level
- **FInv** Further Investigation (generally with decay detection equipment)
- **Pol** Pollard or re-pollard
- **Mon** Monitor ongoing condition (annually by staff/owners & every 2-3 years by consultant). Svr Ivy/Clr Bs Sever Ivy/clear base and re-inspect base/stem for concealed defects

APPENDIX C

Appendix C Tree Protective Fencing Detail (from BS5837:2012)

Figure 2 **Default specification for protective barrier**

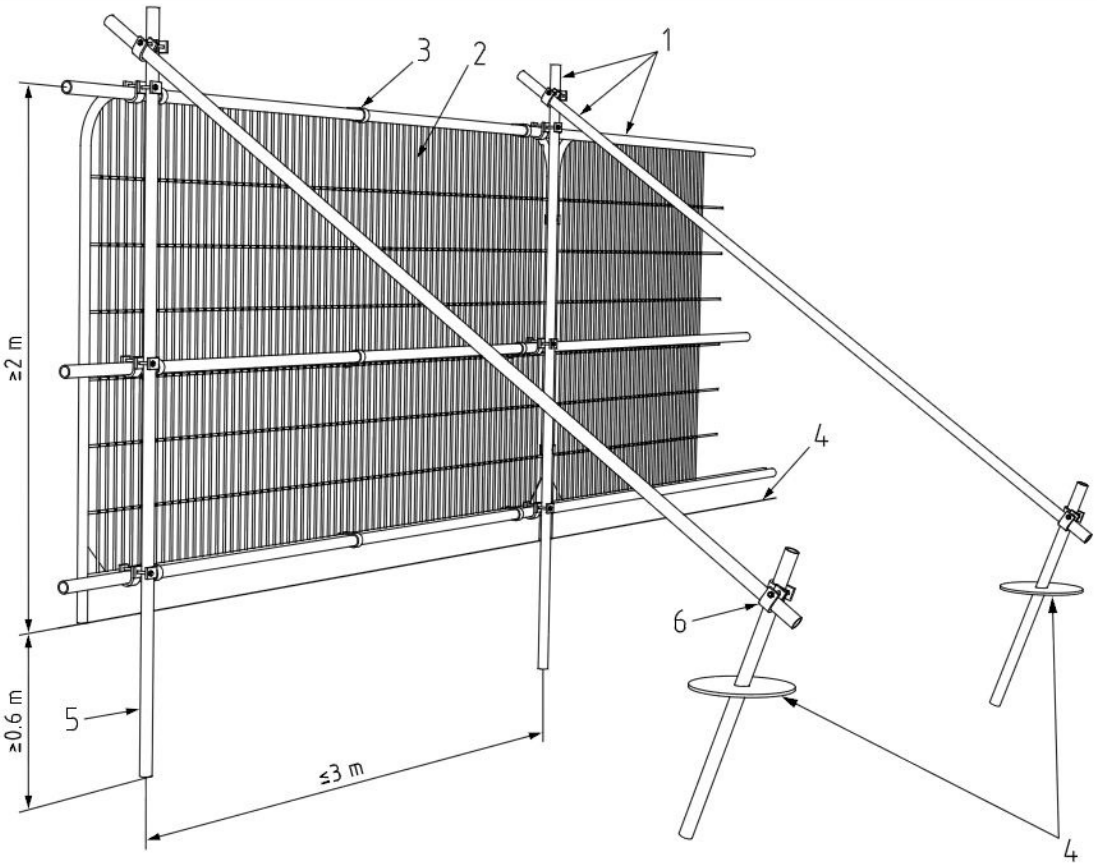

Key

1 Standard scaffold poles

2 Heavy gauge 2 m tall galvanized tube and welded mesh infill panels

3 Panels secured to uprights and cross-members with wire ties

4 Ground level

5 Uprights driven into the ground until secure (minimum depth 0.6 m)

6 Standard scaffold clamps

Figure 3 Examples of above-ground stabilizing systems

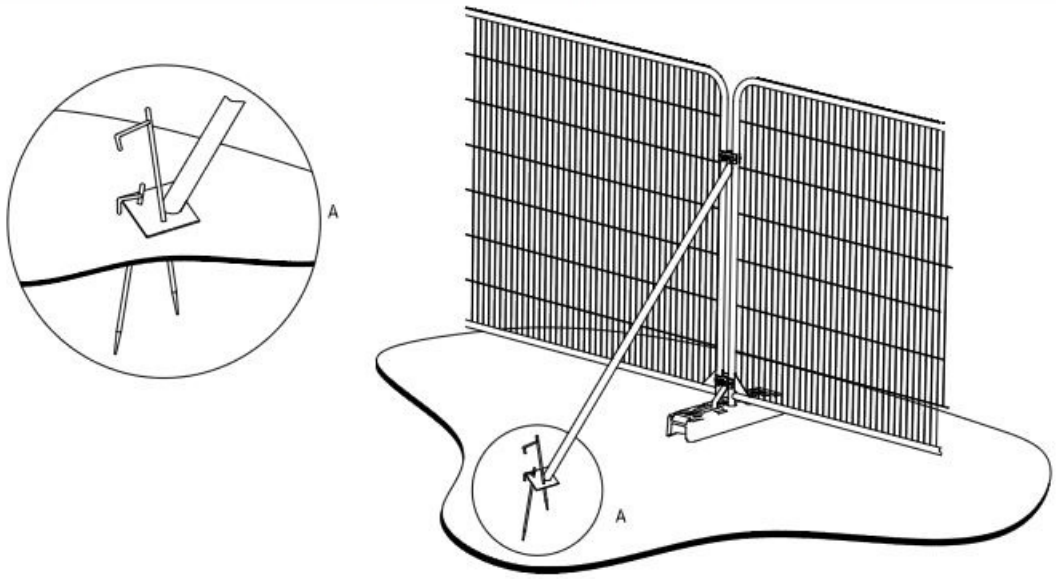

a) Stabilizer strut with base plate secured with ground pins

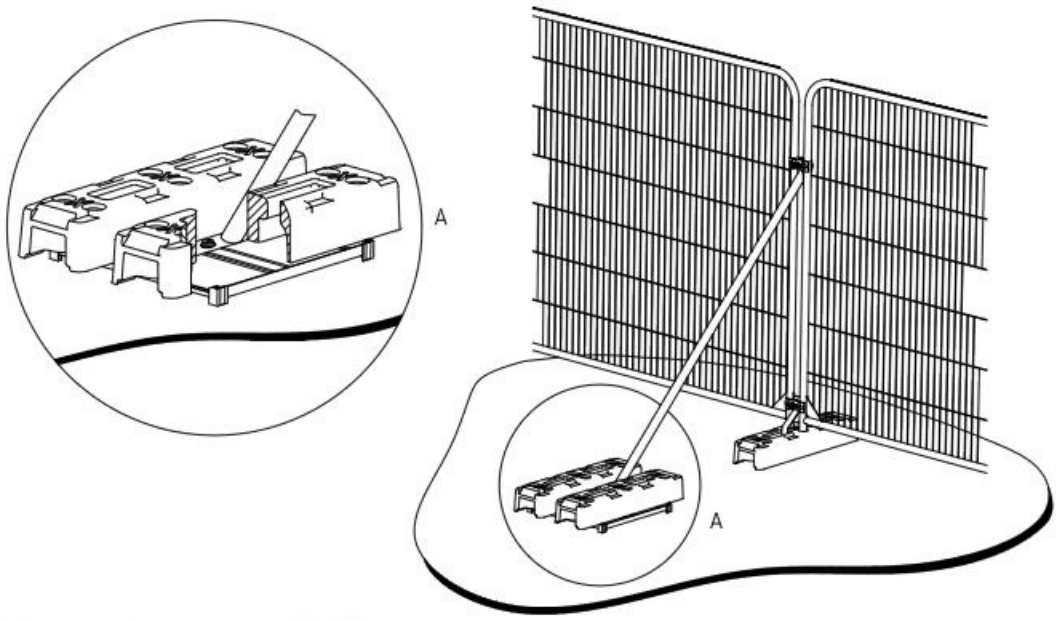

b) Stabilizer strut mounted on block tray

APPENDIX D

Appendix D

1.0 Glossary of Terms

Canker	Disease damaged area of a tree, usually caused by fungus or bacteria.
Co-dominant Stem	A stem which has grown in direct competition to the main stem and which has formed a substantial size influencing the appearance of the tree.
Crown Lift	The removal of the lowest branches, usually to a given height. It allows more residual light and greater clearance underneath for vehicles etc.
Crown reduce	The reduction of a tree's height or spread while preserving its natural shape.
Crown thin	The removal of some of the density of a tree's crown**,** usually 5-25% allowing more light through its canopy and reducing wind resistance.
Deadwood	The removal of all dead, dying and diseased branches from a tree. Also, wood which is dead.
Dieback	Where branches are beginning to show signs of death usually at the tips in the crown.
Epicormic shoots	Small branches that grow in uncharacteristic clusters around the base or the stem of a tree, usually as a result of bad pruning or some other stress factor.
Formative pruning	The trimming of a tree to remove weaknesses and irregularities which may lead to problems. The formative pruning operation is aimed at reducing the potential for future weaknesses or problems within the tree's crown.
Included bark	Where the bark on two adjoining branches or stems is growing tightly together, forming a joint with limited physical strength.
Pollarding	A method of tree management in which the main trunk of the tree is cut at about 4m, and the resulting branches are then cropped on a regular basis.
Remedial pruning	The removal of old stubs, deadwood, epicormic growth, rubbing or crossing branches and other unwanted items from the tree's crown. Sometimes referred to as crown cleaning.
Topping	Topping is a form of pruning that removes terminal growth leaving a 'stub' cut end. Topping causes serious health problems to a tree.

2.0 General Guidelines

2.1 All work must be to BS 3998:2010 – Tree work - Recommendations

2.2 Staff carrying out the work must be qualified, experienced and ideally be Arboricultural Association approved contractors, and should be covered by adequate public liability insurance.

2.3 Any defects seen by a contractor or the client that were not apparent to the consultant must be brought to the consultant's attention immediately.

2.4 No liability can be accepted by the consultant in respect of the trees unless the recommendations of this method statement are carried out under the supervision of the designated arboriculturist.

2.5 It is advisable to have trees inspected by designated arboriculturist regularly.

APPENDIX E

Appendix E

'No Dig' Construction-Guidance Notes

- Install F4M Geotextile Separation Fabric over cleared levelled ground surface N.B. ensure that existing material is carefully removed and levels altered minimally: infill with salt free sharp sand where necessary.
- The cellular confinement system (e.g.1 x 100 mm 'ProtectaWeb' (or equivalent) cellular confinement system subject to site requirements & manufacturer's recommendations) is then laid on the membrane and adjacent panels are stapled together. Place staking pins to maintain 'ProtectaWeb' cells open.
- Panels are then backfilled with 100mm depth of no-fines 20-40mm particle size stone (clean granular fill).
- The construction should ideally be undertaken between May and October when the ground is sufficiently dry to prevent compaction occurring. The sub-base should be flat, that is to say any small hollows should be filled with sharp sand to bring up to surrounding levels.
- The geotextile should be laid out and not trafficked across at any time.
- The 'ProtectaWeb' confinement system should be laid out and worked on as the contractor progresses across the length of the area. The panels are sequentially filled with the no-fines aggregate, each serving as a platform for the next section.
- There is no need at any time for the ground to be crossed by heavy traffic. The particles/gravel pieces are transported from the on site storage area over the freshly-laid confinement system BY WHEELBARROW and installed BY HAND. There will be no trespass on to the root protection area beyond the installation of the confinement system itself.
- The infill can then be rolled to compact the particles and create a tight interlock across the cells. The finished surface can then be laid on top. Again no fines material to be used: porous tarmac is recommended for this site given the level changes that are required.
- New kerb lines may be cast into the ProtectaWeb cells.
- During the main construction phase a wearing course should be placed over the 'Protectaweb' system.
- For technical data on the ProtectaWeb system always refer to the manufactures guidelines for design and implementation.

Further technical advice can be gained from the manufacturer(s) including Wrekin Products, Geosynthetics or Core LP.

APPENDIX F

Appendix F

Remove hazel stem extending into site to the south