Weldale Street

Courtyard B Play Features Schedule

To be read with drg. no. WDS-MWA-XX-XX-DR-L-2005, and the “Courtyard B Play Strategy”. For maintenance notes, please refer to the relevant section of the Play Area Management Plan (WDS-MWA-XX-XX-RP-L-0101).

Data sheets for the play equipment and gates are provided in the appendix to this document.

Play Equipment:

Reference	Manufacturer
H094 - Cae Doctor Toddler Unit	GL Jones Playgrounds
T401 - Sensory Totem	GL Jones Playgrounds
D003 - Ability SpaceDisk Roundabout	GL Jones Playgrounds
E061- Stepping Pods	GL Jones Playgrounds
E050- Balance Beam	GL Jones Playgrounds
T023 - Sensory Fidget Play Panel	GL Jones Playgrounds

GL Jones Playgrounds Ltd. Tel: 01248 600 372
For details please refer to the technical sheets in the appendix.

Play Area Signage

Polycarbonate panel with vinyl graphics. 600x400mm. To be securely fixed to each entrance gate. Green colour with no dogs and no smoking logos, the age range of the play area (children up to 5 years old), the name of the site operator, and a contact number to call in case of damage, vandalism, or accidents. (See the text on the illustration opposite).

Table Tennis Table:

He-Blad Concrete Ping-pong table
Colour: Green - RAL 6009
Size: 2740 x 1520 mm LxW; 760mm ht
He-Blad UK Tel. 0114 352 0110
For details please refer to the technical sheets in the appendix.

Self Closing Gates:

2no. IAE ‘Prosafe’ hydraulic self closing gates or equal and approved.
Size: 1.2m width, 1.2m ht
Colour: ‘Signal Yellow’ (RAL 1003)
IAE Tel: (0)1782 339321
For details please refer to the technical sheets in the appendix.

Surfacing:

Type: Rubber EPDM Wet Pour safety surface
Colour: Brown
Depth: 40mm
GL Jones Playgrounds Ltd. Tel: 01248 600 372
To be laid on a type 1 base in accordance with the supplier’s recommendations.

Cae Doctor Toddler Unit

T023 - Sensory Fidget Play Panel

Stepping Pods

Balance Beams

Ability Space Disk Roundabout

Play Area Signs - to be affixed to each self-closing gate

APPENDIX: EQUIPMENT SPECIFICATION SHEETS

Design
Manufacture
Installation

GL Jones Playgrounds Ltd
Station Road, Bethesda
Gwynedd, LL57 3NE
Tel: 01248 600 372
www.gljones-playgrounds.co.uk
info@gljones-playgrounds.co.uk

H094 - Cae Doctor Toddler Unit

Cae Doctor Toddler Unit	
Product Code	H094
Surfacing Area (mm)	4918x4467
Age Range	All Ages
Free Height of Fall (m)	0.6
Total Height (m)	2.7

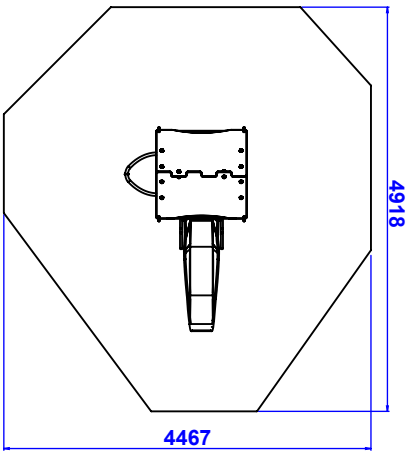

SPECIFICATION

Materials - The heavy duty unit is made of steel, aluminium and HDPE plastic. The steel surfaces are hot dip galvanized and then powder coated.

Finishing - Galvanized Steelwork with Powder Coated finish / Aluminium.

Fasteners - Stainless Steel Torx Vandal resistant bolts and High Tensile hexagon bolts & nuts.

Spare Parts - Most common components are available ex-stock or within four weeks from date official order is received.

H094 - Cae Doctor Toddler Unit Maintenance Schedule

BS EN1176-1:1998: The frequency of inspection will vary with the type of equipment or materials used and other factors, e.g. heavy use. Levels of vandalism, costal location, air pollution and age of equipment.

IMPORTANT: During maintenance safety fencing must be erected around the area where the work will be carried out to avoid injury.

Routine Visual Inspection (can be necessary for playgrounds subject to heavy use or vandalism)

1. Check that the Modular Unit and its surrounding safety surfacing are clear of any debris.

2. Check condition of safety surfacing for excessive wear or intentional damage.

3. Check that all parts are still present.

4. Visually check for damages e.g cracks in plastic components, wear or fraying on rope and chain, chips in paintwork, failure on metalwork e.g weld failure.(repair and re-paint if required)

5. Check all supports at ground level for corrosion or mechanical damage.

Operational Inspection (to be carried out every 3 months or less depending on usage)

The steps detailed in “Routine Visual Inspection” should be carried out with the addition of the following checks to complete the Operational Inspection: -

1. Check that all fasteners are tight and secure.

2. Check operation of any interactive panels.

Annual Inspection

The steps detailed in "Routine Visual Inspection" & "Operational Inspection" should be carried out with the addition of the following checks to complete the Annual Inspection:-

1. Inspect for any corrosion especially at ground level.

2. Visually check for damages e.g cracks in plastic components, wear or fraying on rope and chain, chips in paintwork, failure on metalwork e.g weld failure.(repair and re-paint if required)

3. Check for loose and /or cracked foundations.

4. Check the surrounding surface for trip hazards or pot holes and fill/repair if necessary.

Note: All spare parts must comply with the manufacturer's specifications, and are available from GL Jones Playgrounds Ltd.

Design
Manufacture
Installation

GL Jones Playgrounds Ltd
Station Road, Bethesda
Gwynedd, LL57 3NE
Tel: 01248 600 372
www.gljones-playgrounds.co.uk
info@gljones-playgrounds.co.uk

Product Information

T401-001 - Sensory Totem

BS EN 1176 - Designed to British & European Standards

MATERIALS

Panel - Two Colour XD ECO High Density Polyethylene (HDPE)

Beam Edge - Extruded aluminium with powder coat finish

Mirrors - Shatterproof Polycarbonate

SUPPLY METHOD

Totem - Fully assembled

TECHNICAL

Age Range:	2+ Years
Largest Part:	332 x 1600 x 145mm
Total Weight:	24kg
Surfacing :	N/A

DIMENSIONS

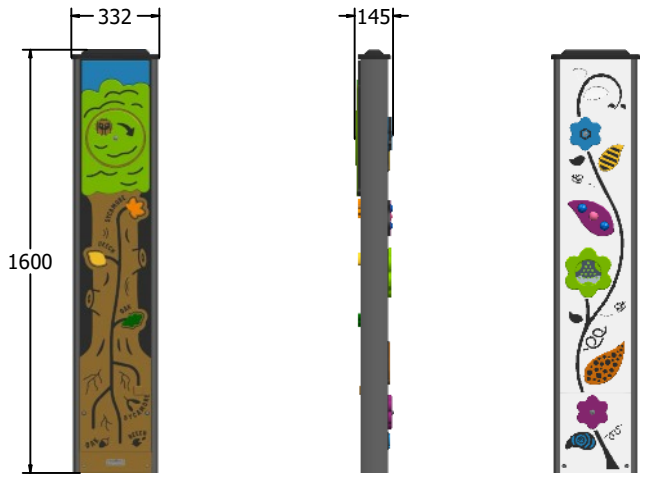

Foundation Detail:

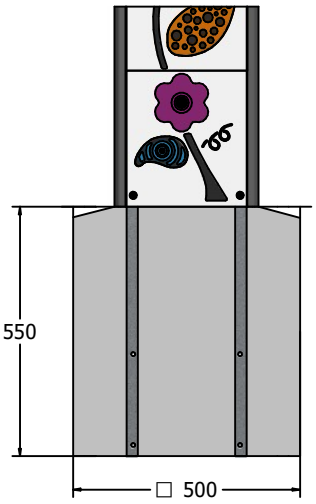

FEATURES

- SLIDERS - Sycamore, oak & beech leaf counters
- ROTATE - Hidden animal disc & flower discs
- TOUCH - Sensory textured leaves
- LETTERS - Word matching leaves to seeds
- ROLLER BALL - Interactive roller
- MIRROR - Reflective
- INCLUSIVE - Activities positioned at easily accessible

Product Information

FITMSEN - Sensory Totem

FEATURES

- **SLIDERS** - Sycamore, oak & beech leaf counters
- **ROTATE** - Hidden animal disc & flower discs
- **TOUCH** - Sensory textured leaves
- **LETTERS** - Word matching leaves to seeds
- **ROLLER BALL** - Interactive roller leaf
- **MIRROR** - Reflective Leaves
- **INCLUSIVE** - Activities positioned at easily accessible heights

IMPORTANT: you must specify the colour option you require at the time of order if it is different from the colour listed/shown above, requirements are subject to availability at the time of order

Fahr Industries Ltd
Spitfire Road, Old Sarum,
Salisbury, Wiltshire, SP4 6GB, UK

©2025 Fahr Industries Ltd
These designs and content belong to Fahr Industries Ltd and are not to be reproduced in any way or by any means without written permission

Tel: +44 (0)1722 349793
Email: sales@fahr-industries.com
Web: www.fahr-industries.com

GL Jones Playgrounds Ltd
Station Road, Bethesda
Gwynedd, LL57 3NE
Tel: 01248 600 372
www.gljones-playgrounds.co.uk
info@gljones-playgrounds.co.uk

Design
Manufacture
Installation

D003 - Ability SpaceDisk (1.9m diameter)

Ability SpaceDisk	
Product Code	D003
Size	1900mm
Surfacing Area	∅ 5872mm
Age Range	All Age Groups
Free Height of Fall	1.0m
Weight	180kg

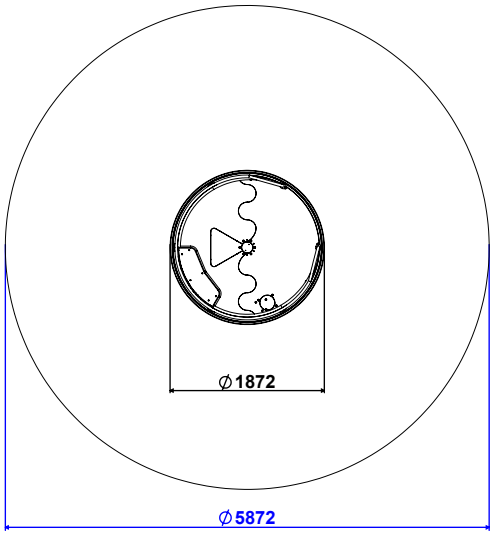

SPECIFICATION

Materials - The heavy duty roundabout is made of steel, aluminium and HDPE plastic. The steel surfaces are hot dip galvanized and then powder coated. The base ring is left galvanised whilst the aluminium decks are powder coated to help with warmer weathers. The seats are made of recycled plastic panel with a grip rubber top.

Finishing - Galvanized Steelwork / Aluminium with Powder Coated finish.

Fasteners - Stainless Steel Torx Vandal resistant bolts and High Tensile hexagon bolts & nuts.

Spare Parts - Most common components are available ex-stock or within four weeks from date official order is received.

D003 : Ability SpaceDisk

Maintenance Schedule

The frequency of inspection will vary with the type of equipment or materials used and other factors, e.g. heavy use, Levels of vandalism, coastal location, air pollution and age of equipment.

IMPORTANT: During maintenance safety fencing is recommended around the area where the work will be carried out to avoid injury.

Routine Visual Inspection (can be necessary for playgrounds subject to heavy use or vandalism)

1. Check the Ability SpaceDisk and its surrounding safety surfacing are clear of any debris.
2. Check condition of safety surfacing for excessive wear or intentional damage.
3. Check that all parts are still present.
4. Visually check for damages, if steelwork is damaged check for sharp edges (file down and repaint if required)
5. To ensure the Ability SpaceDisk is fully functional, rotate the unit in both directions, If the Ability SpaceDisk does not rotate then run a thin card (or an item of similar thickness) along the gap between the base unit and the deck to locate any wedged debris. Usually this lodged item can be dislodged by vigorously moving the unit backwards and forwards and up and down.
6. Ensure all fasteners are secure, tighten if necessary.
7. In case of an **EMERGENCY** this unit can be immobilised please **(see B.1.)**
8. Powder coated equipment should be maintained and cleaned by means of regular washing using warm water and mild detergent. All surfaces should be cleaned using a soft cloth or sponge, using nothing harsher than natural bristle brushes. Cleaning intervals should be no longer than 4 weeks. Records of all cleaning schedules and frequencies should be kept and made available to GL Jones Playgrounds if requested.

Operational Inspection (to be carried out every 3 months or less depending on usage)

The steps detailed in “Routine Visual Inspection” should be carried out with the addition of the following checks to complete the Operational Inspection: -

1. The 6 Stabiliser Wheels can be accessed through the Wheel Inspection Hatch **(see A.1.)**

Annual Inspection

The steps detailed in “Routine Visual Inspection” & “Operational Inspection” should be carried out with the addition of the following checks to complete the Annual Inspection: -

1. Check bearings for excessive wear/movement, replace if necessary.
2. Inspect for any corrosion especially at ground level.
3. Inspect all welded joints for cracks and/or damage.
4. Check for loose and/or cracked foundations.
5. Check the surrounding surface for trip hazards or pot holes and fill/repair if necessary.
6. Inspect paintwork and re-paint damaged surfaces

Note : All spare parts must comply with the manufacturer’s specifications, and are available from GLJones Playgrounds Ltd. Yearly service can be carried out by GL Jones Playgrounds, please ask for more information.

A.1. Wheel Inspection Hatch

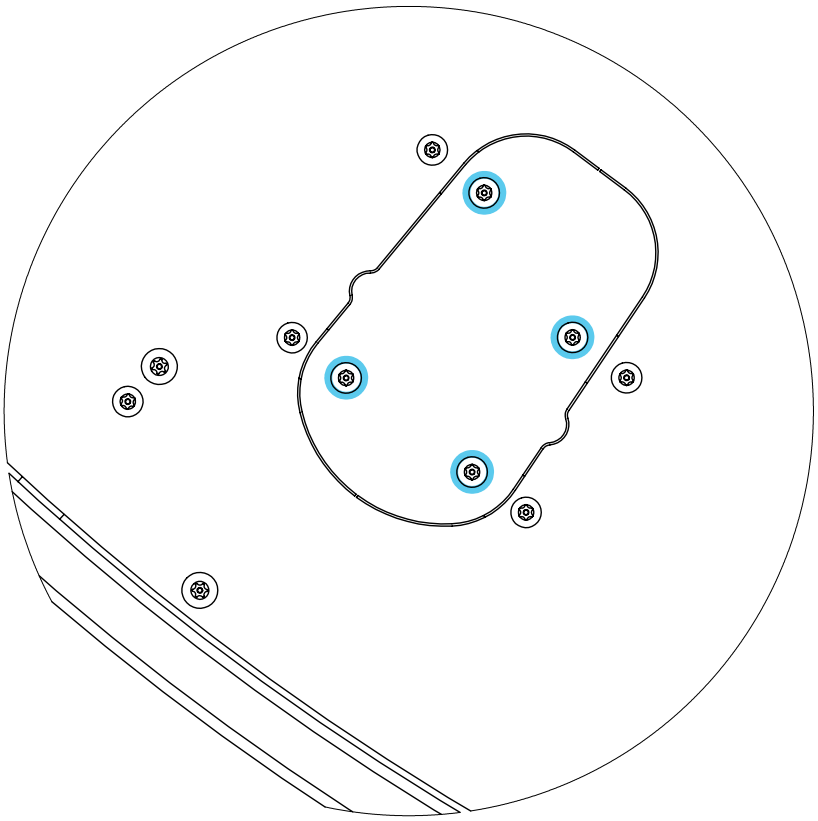

Remove the **4 x M8x20mm Powerdrive bolt** to be able to lift the wheel hatch from the deck, **Keeping hands and feet clear of the hatch** carefully rotate the unit until the first wheel becomes exposed in the open hatch. Check the wheels for smoothness and excessive wear. (Depending on the amount of use the unit has, the wear can vary from site to site and the wheels may need replacing more frequently). The new wheel can be replaced without the need for removing the deck. Carry out the Inspection on the other 5 wheels by repeating the process. Refit the wheel hatch.

A.2. Wheel replacement kit

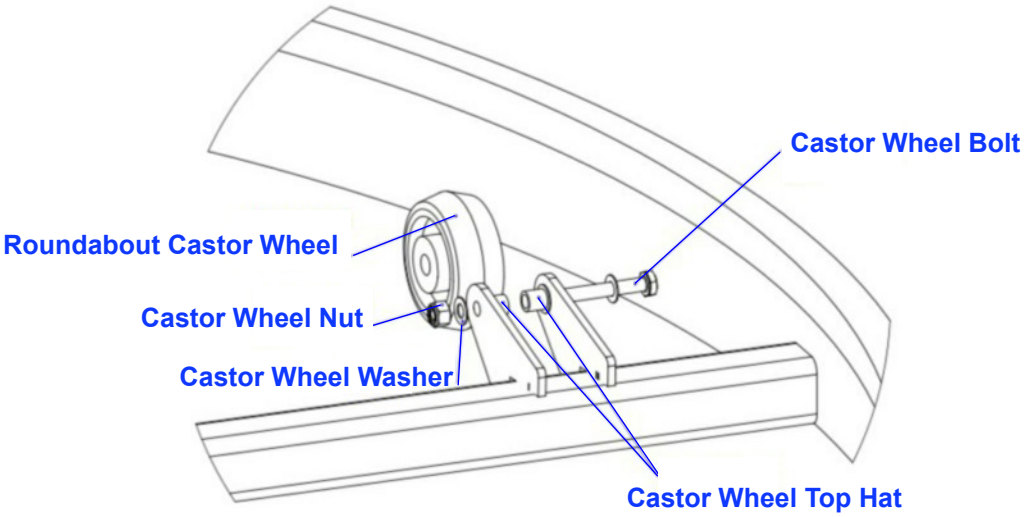

B.1. Immobilising Roundabout

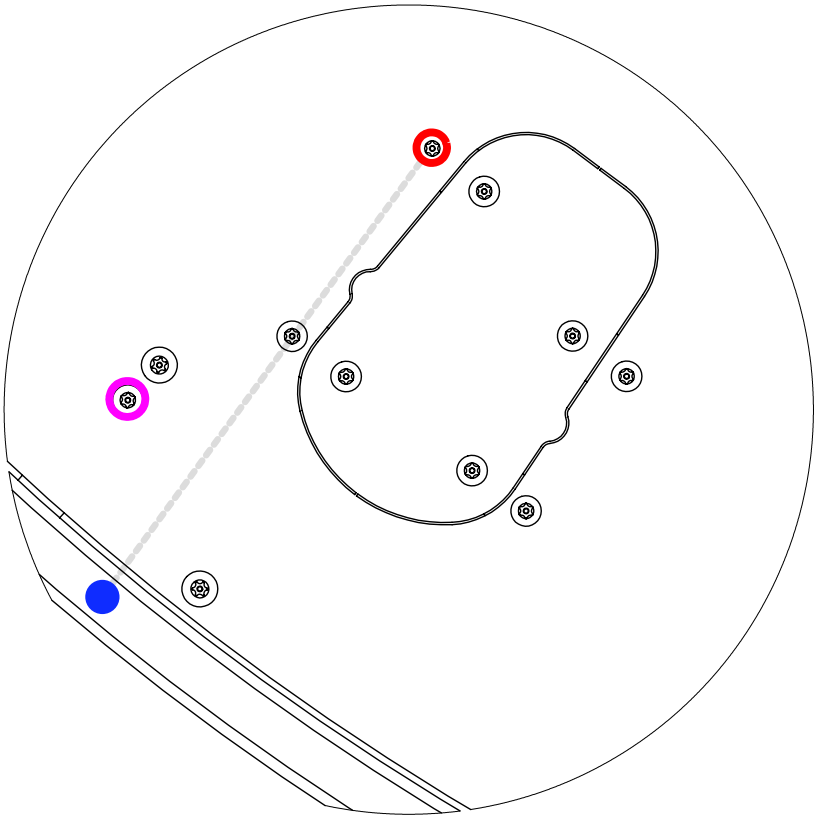

1. Line up the **mark** on the outside ring with the **immobilising bolt.** Remove this bolt to help line up the hole with the immobilising boss under the deck.

2. Remove the **M8x45mm Powerdrive bolt** from the deck lock and place in the **immobilising bolt hole**.

Roundabout is now immobilised. To Mobilise roundabout again, reverse the process.

C.1. Deck Height Adjustments

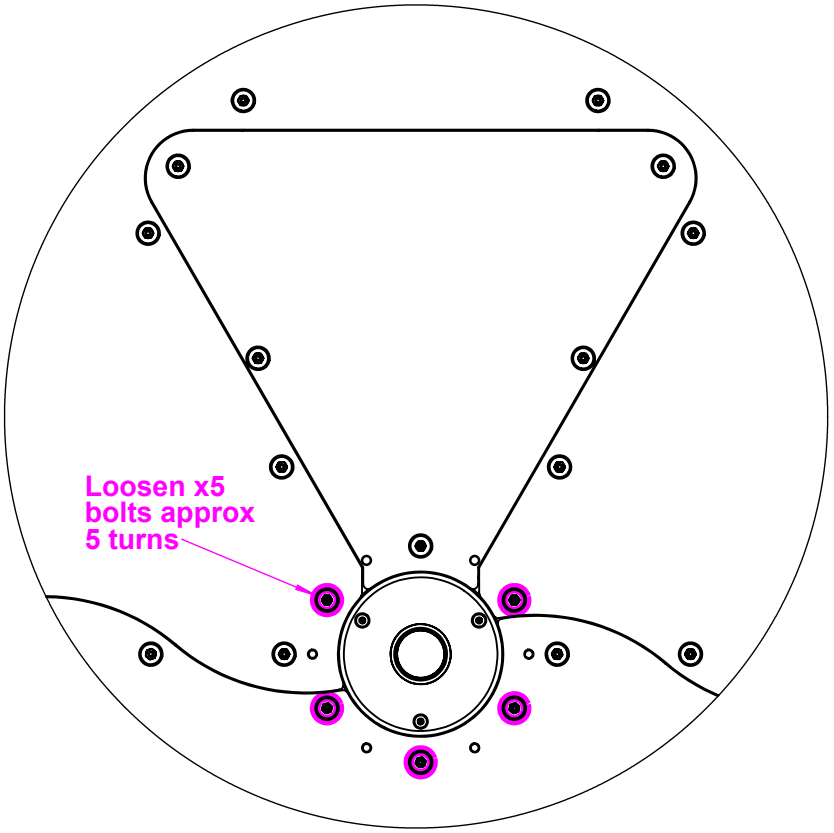

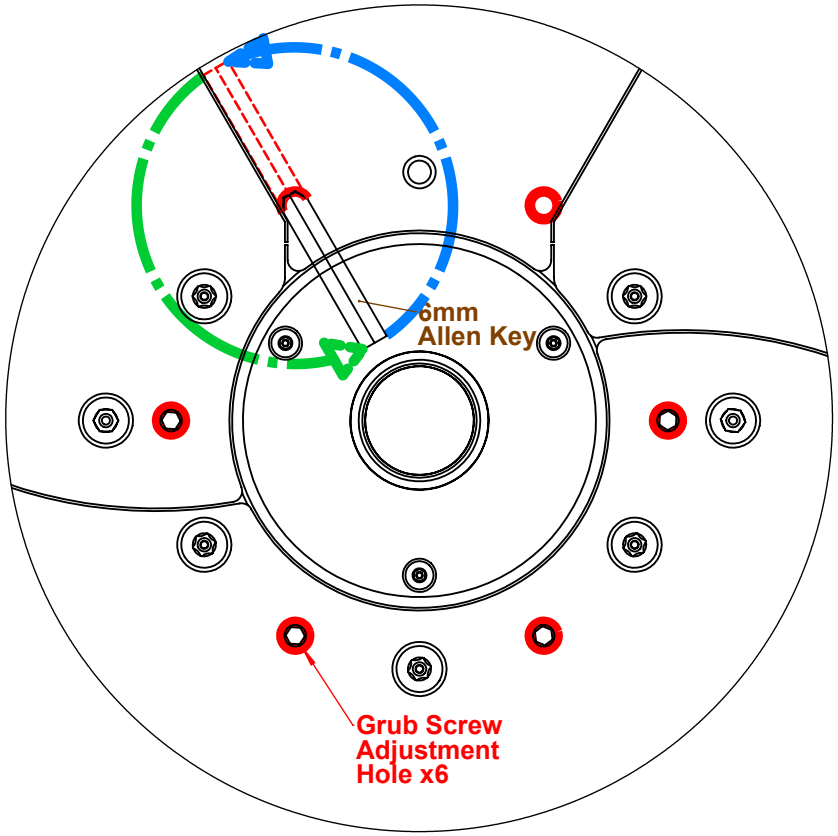

1/2 Turn = Approx 1mm Height Gain

1 Full Turn = Approx 2mm Height Gain

Rotate the roundabout to check it's no longer heavy on the wheels before re-tightening deck bolts. Note: Adjusting the deck too far will result in deck wobble.

Design
Manufacture
Installation

GL Jones Playgrounds Ltd
Station Road, Bethesda
Gwynedd, LL57 3NE
Tel: 01248 600 372
www.gljones-playgrounds.co.uk
info@gljones-playgrounds.co.uk

Product Information

FIFTBBEAM - Balance Beams

BSEN 1176 - Designed to British & European Standards

MATERIALS

Panel - Single Colour High Density Polyethylene (HDPE)

Polydek - HDPE with a rubber button grip top surface

Recycled Posts - Recycled plastic with a texture finish

SUPPLY METHOD

Balance Beam - Pre-assembled for easy installation

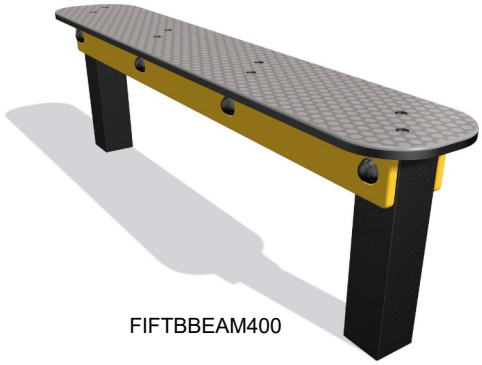

FIFTBBEAM400

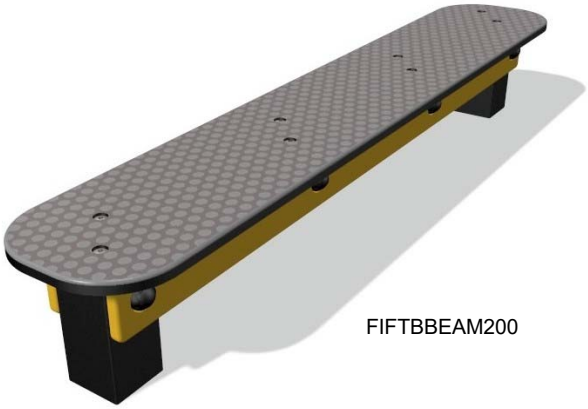

FIFTBBEAM200

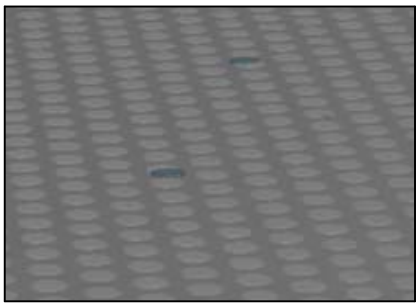

Anti-Slip Polydek Tread

DIMENSIONS

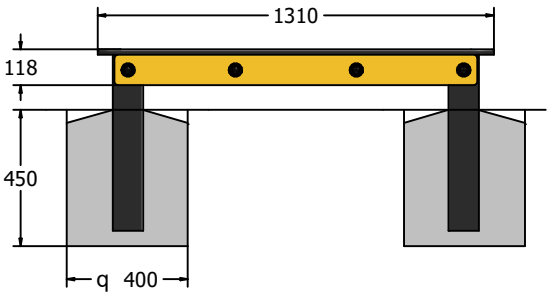

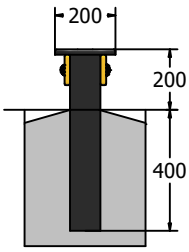

FIFTBBEAM200

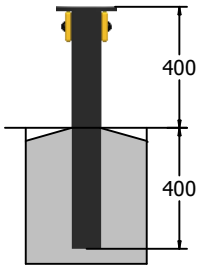

FIFTBBEAM400

TECHNICAL

Age Range:	3+ Years
Largest Part:	FIFTBBEAM200 - 1310 x 200 x 600mm
Total Weight:	FIFTBBEAM200 - 21kg Approx.
Surfacing :	N/A

Age Range:	3+ Years
Largest Part:	FIFTBBEAM400 - 1310 x 200 x 800mm
Total Weight:	FIFTBBEAM400 - 24kg Approx.
Surfacing :	N/A

Design
Manufacture
Installation

GL Jones Playgrounds Ltd
Station Road, Bethesda
Gwynedd, LL57 3NE
Tel: 01248 600 372
www.gljones-playgrounds.co.uk
info@gljones-playgrounds.co.uk

E061 - Stepping Pods

Material Specification
Styrene Butadiene Recycled Rubber (SBR) - Bound using a ratio of high quality moisture curing polyurethane Pre-Polymer. PAS107-2012

Metal Treatment : All Posts are galvanised to BS EN ISO 1461. An architectural quality BS 6947 polyester powder coating follows, itself reaching a thickness of 70-100 microns. The result is a smooth, attractive, hard wearing and weather resistant finish. All dimensions +/- 2mm. Weight per unit +/-3%

The Stepping Pods consist of a galvanised and powder coated steel post and black SBR recycled rubber top. Steel stems are available in Red, Blue, Green, Yellow and Black. Pods are pre-assembled and ready for immediate installation on site. The Stepping Head is extra hard wearing with its dimpled rubber top.

Step Post Height	Ground Anchor Length	Out of Ground min/max	In Ground
200mm	500mm	110mm/120mm	380mm
300mm	500mm	190mm/200mm	300mm
400mm	700mm	310mm/320mm	380mm
500mm	700mm	390mm/400mm	300mm

Keep all of the above products clean using a mild detergent with a scrubbing brush or jet was, this should be done quarterly to keep any mould at bay and to keep the products looking visually pleasing. If mould does take hold, scrubbing with Dettox or an own brand mould & mildew remover has proved successful. If you install any of the products under trees they will need more frequent cleaning. Check often to ensure posts are still securely in place.

Design
Manufacture
Installation

GL Jones Playgrounds Ltd
Station Road, Bethesda
Gwynedd, LL57 3NE
Tel: 01248 600 372
www.gljones-playgrounds.co.uk
info@gljones-playgrounds.co.uk

Product Information

T023-001 - Sensory Fidget Play

BS EN 1176 - Designed to British & European Standards

MATERIALS XD ECO High Density Polyethylene (HDPE)
Box Section Steel Posts (Galv & PC)

FEATURES

- INCLUSIVE - Activity positioned at accessible
- SLIDERS - Various counters along a
- ROLLERBALL - Pink and blue roller balls
- ROTATE - Shape spinners & moulded ball spinner
- FLIP - Create a simple pattern using the two colour
- TOUCH - Finger trace

DIMENSIONS

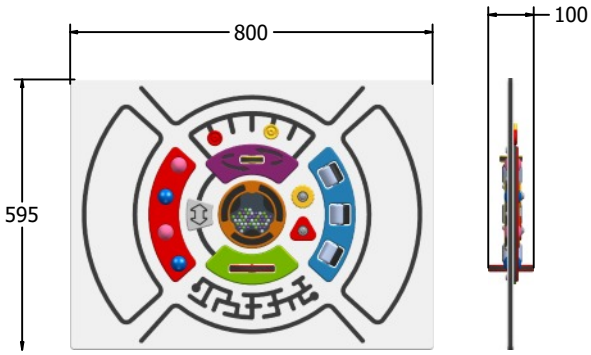

Foundation Detail:

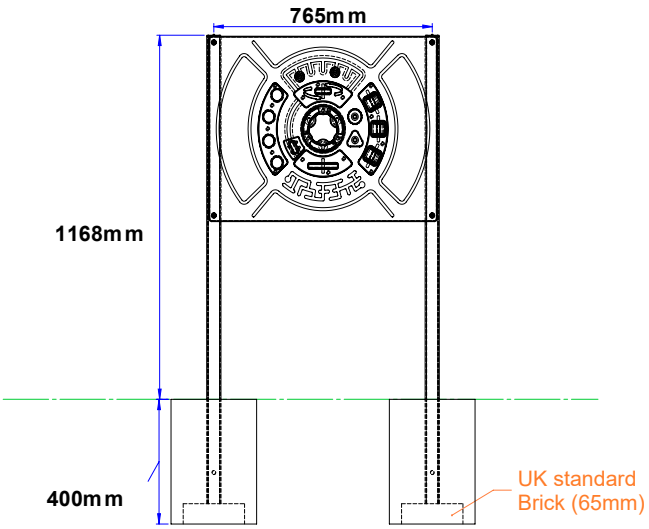

TECHNICAL

Age Range:	2+ Years
Largest Part:	1503 x 50 x 50mm
Total Weight:	18.70kg
Surfacing :	N/A

correspondence address

HeBlad - UK
The Balance, 7th floor, Pinfold Street
S1 2GU Sheffield, South Yorkshire
T. 0114 352 0110
info@HeBlad.co.uk
www.HeBlad.co.uk

head office address

HeBlad BV
Diamantweg 22
NL - 5527 LC Hapert

Concrete Ping-pong table green

Product code: PP.GR

£ 2,800.00 excl. VAT
(£ 3,360.00 incl. VAT)

The classic rectangular table tennis table from HeBlad with a green lacquered playing surface, who hasn't heard of it?
Where are our table tennis tables located? For more than twenty years we've been supplying concrete table tennis tables to schools, campsites, swimming pools and institutions throughout the Netherlands and now also in neighbouring countries. The concrete table tennis tables, but our other products such as the foot volleyball table, the game table and the table football tables as well, provide endless outdoor fun.

Where does table tennis come from?

The game of table tennis has been around for a long time. It emerged in England at the end of the 19th century as a derivative of regular tennis. Fortunately, the new generations also know where to find the table tennis table; at schools, campsites and neighbourhood fields. The concrete table tennis tables from HeBlad are weather-resistant and rock-solid. A super strong and therefore durable playground equipment, an asset to any public or busy outdoor space.

Solid one-piece concrete table tennis tables

HeBlad table tennis tables are always cast from one piece of concrete. This means that there are no loose parts, no nuts or bolts involved. The tables can therefore not be dismantled. That is what makes them so solid and robust. The playing surface of this variant is green. The top layer in colour is also strong. After a thorough primer, all concrete table tennis tables are spray-painted with a two-component paint in, for example, green (RAL 6009) or blue (RAL 5005). The

20 May 2025 - Prices subject to change

Our products are delivered from our factory in the Netherlands.

correspondence address

HeBlad - UK
The Balance, 7th floor, Pinfold Street
S1 2GU Sheffield, South Yorkshire
T. 0114 352 0110
info@HeBlad.co.uk
www.HeBlad.co.uk

head office address

HeBlad BV
Diamantweg 22
NL - 5527 LC Hapert

table defies all seasons and is resistant to all weather influences. The top layer is very wear-resistant.

Concrete table tennis tables in different sizes

Are you looking for a table tennis table? Then you can choose from different sizes, colors and models. In addition to this classic green table tennis table, we have variants with rounded corners and also completely round ping pong tables. These round variants have a diameter of 2.60 meters. Have you decided on which model you would like to purchase? Then think about which color best suits your environment. You can choose from the colors blue, green, natural concrete, anthracite and anthracite concrete.

The advantages of our concrete table tennis tables:
• Low maintenance
• Durable
• Strong and robust
• Encourages playing outside
• Provides for fun and teamwork
• You order directly from the manufacturer and supplier!

Questions about table tennis tables?

Do you have any questions about our concrete table tennis tables or any of our other products? Please feel free to contact us. Perhaps even take a look at our frequently asked questions and information about the delivery of our products. We guarantee you years of fun when you purchase this table tennis table.

** When purchasing a HeBlad table tennis table, a set of bats (4 bats and 2 balls) is included for free.

Our products are delivered from our factory in the Netherlands.

correspondence address

HeBlad - UK
The Balance, 7th floor, Pinfold Street
S1 2GU Sheffield, South Yorkshire
T. 0114 352 0110
info@HeBlad.co.uk
www.HeBlad.co.uk

head office address

HeBlad BV
Diamantweg 22
NL - 5527 LC Hapert

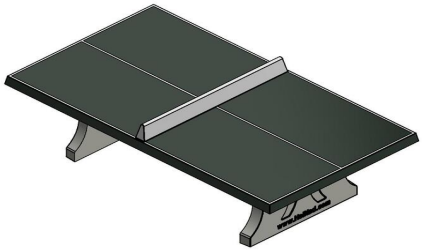

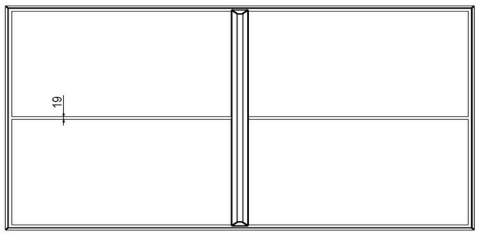

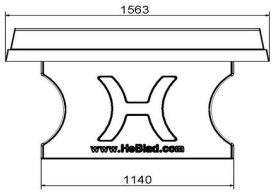

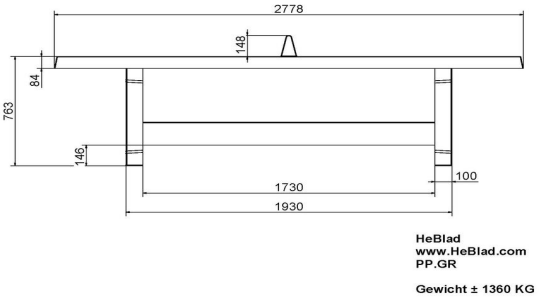

Specifications Concrete Ping-pong table green

Product code	PP.GR	Height tabletop	76 cm
Colour	Green - RAL 6009	Height of the net	14,75 cm
Dimension playing surface (L x W)	274 x 152 cm	Weight	1360 kg
Dimensions bottom of playing surface	278 x 156 cm	Distance legs	183 cm (center to center
Tabletop thickness	8,4 cm		

Related products

PP.BL

PP.R.NT

B.S1

OP.PP

B.DS.SP

Our products are delivered from our factory in the Netherlands.

FENCING

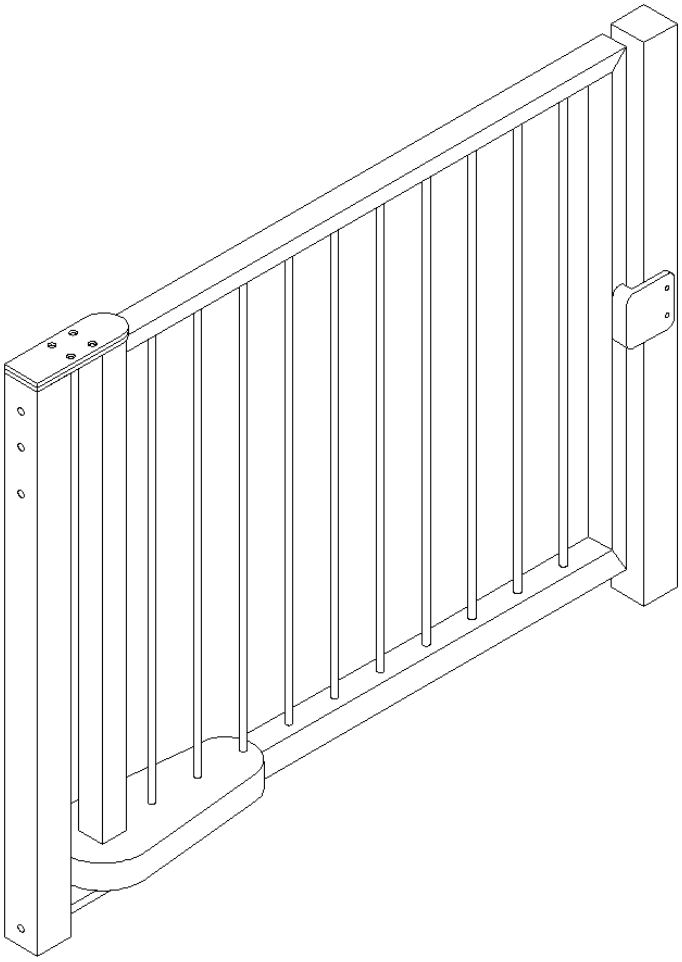

Prosafe

Hydraulic Self Closing Gate

INSTALLATION & MAINTENANCE MANUAL

MOSSFIELD ROAD, ADDERLEY GREEN, STOKE ON TRENT, STAFFORDSHIRE. ST3 5BW
TEL: 01782 339320 FAX:01782 339321 WEB: www.iae.co.uk

General Installation

Standard gate dimensions

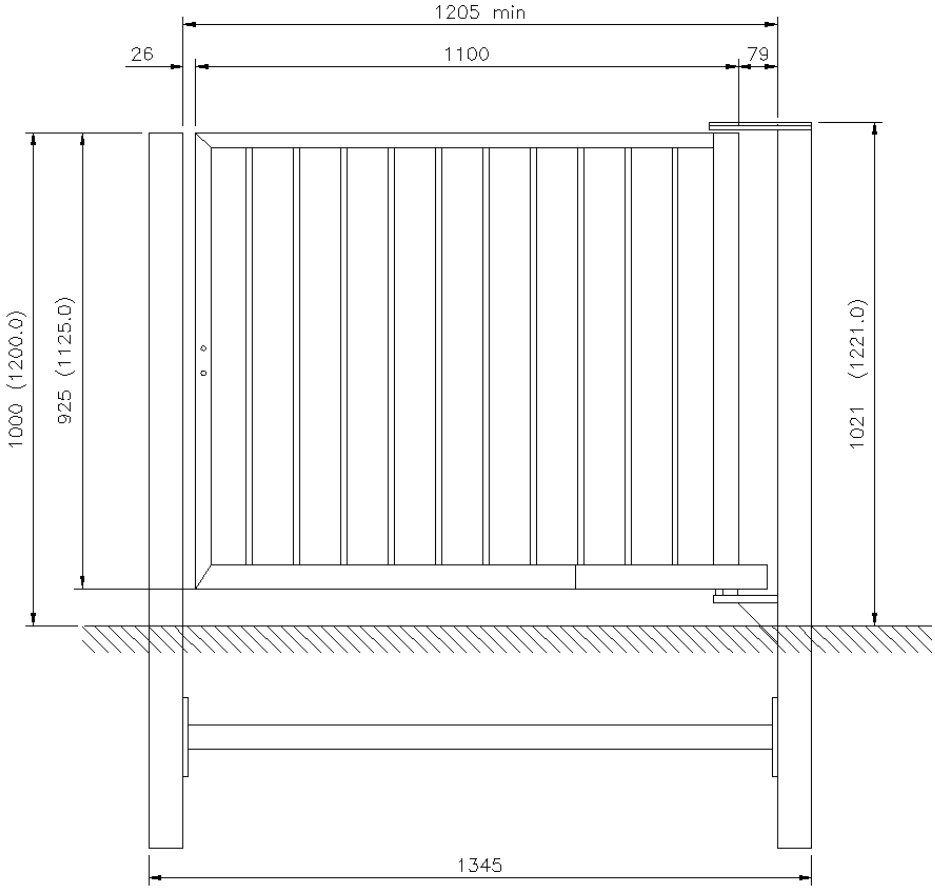

Installation

Ensure that the gate posts are set vertical and that the closing gap not less than 25mm.

It is important to settle the mechanism. Allow at least 1 hour after installation before the first operation. The gate should now be operated to check the speed.

If the gate operation does not meet the site requirements it can be adjusted as below.

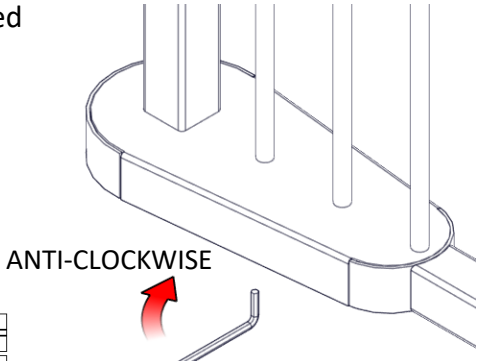

Speed Adjustment

Turn both screws in a clockwise direction to close off both valves. The gate will now not close or open.

Turn both screws approx 1.5 to 1.75 turn in an anti-clockwise direction. This should give an even speed.

Fine adjustment can be made turning the screws as shown.

DO NOT TURN SCREWS MORE THAN 3 TURNS FROM THE CLOSED POSITION.
OIL LOSS MAY RESULT CAUSING THE MECHANISM TO FAIL THUS INVALIDATING ALL WARRANTIES.

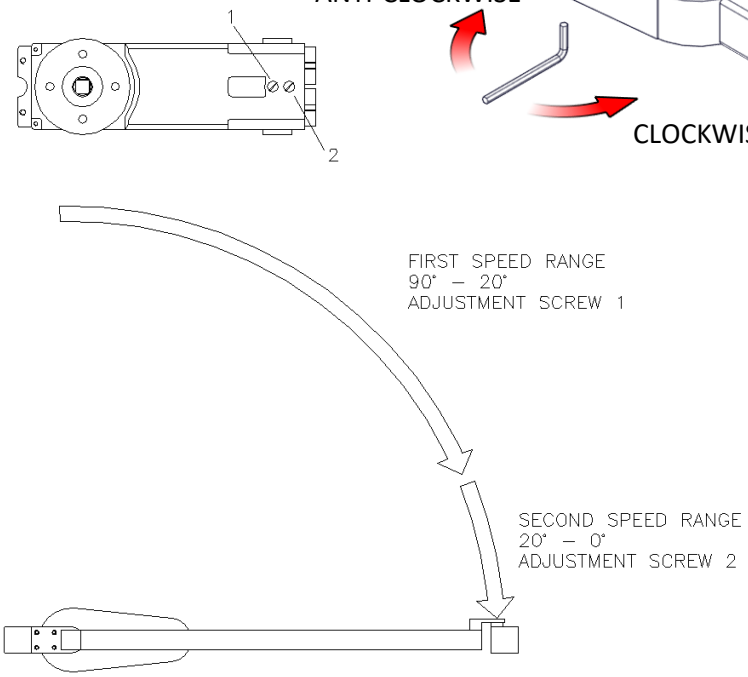

Maintenance

Inspection once every six months :-

Check speed: Open gate to 90° and allow to close. If speed needs adjusting, refer to the instructions on page 1.

Check bottom mounting block:

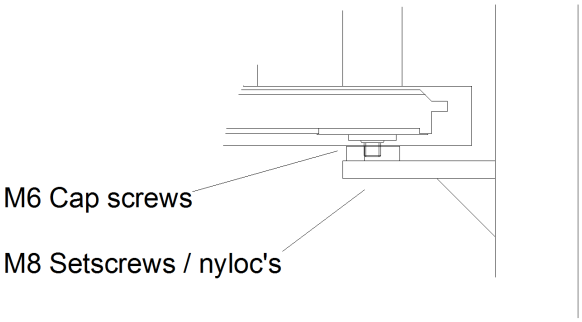

Check M8 setscrews and tighten if necessary.
Check M6 cap screws and tighten if necessary.
Check all fixings and bump stop.

Changing the hand of the gate

All gates are supplied left hand hung or right hand hung according to customer specification. The hand of the gate can be changed on site if necessary.

1. *Remove the slam plate*
   The slam plate is attached by permacone nuts which are enclosed within the slam plate. To remove, either carefully remove the head of the cup sq bolt or loosen the permacone nut.

2. *Remove gate*
   Loosen off the M6 cap screws at the base of the gate, then remove the top bracket. The top brackets are fixed together using M6 cup sq bolts and permacone nuts. To remove, chisel off the permacone nuts and the lift the gate away from the post.

3. *Change the hand*
   The bottom mounting bracket is now accessible. To change the hand of the gate, remove the 3no fixing M8 setscrews and turn over the mounting bracket. For earlier models, loosen the M8 nylon and rotate the mounting bracket in the other direction. Re-fix the mounting bracket securely.

4. *Remount the gate*
   The gate needs to be mounted in the reverse order. Mount the gate into the bottom fixing bracket and replace the top bracket. Tighten the M6 cap screws and then replace the M6 cup sq bolts and permacone nuts. Check the closing speed and adjust if necessary. The gate should stop slightly past the centre of the slam post. Refit the slam plate using M8 cup sq bolt and permacone nuts.

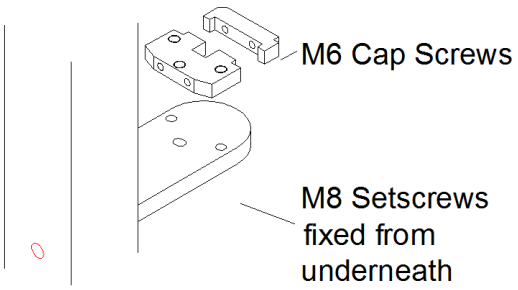
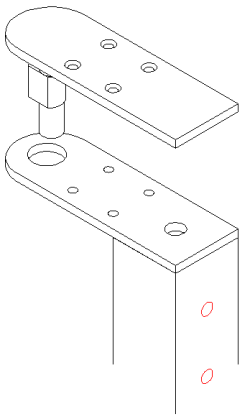
Top bracket secured using M6 x 25 Cup Sq's & Permacone