ARBORICULTURAL IMPACT ASSESSMENT, PROTECTION PLAN AND METHOD STATEMENT

SITE:	ATTERBURY GARDENS CAVERSHAM, RG4 7HW
SURVEY DATE:	5 DECEMBER 2024
REPORT DATE:	5 DECEMBER 2024 - REVISED 17 JUNE 2025
OUR REFERENCE:	659-2026-9/3/2024 REV 1C
ON BEHALF OF:	Neil Davis, Davis Planning Ltd. Chartered Town Planners
AUTHOR:	Mark Harrison, BSc (Hons), MarborA, NDArb

Registered office: 10 Marigold Close, Basingstoke, Hampshire, RG22 5RG
UK company registration number: 09087658
UK VAT number: 159 9350 67
Telephone 07915 847 367
Email admin@harrisonarboriculture.co.uk

CONTENTS

1. INTRODUCTION 3
2. TERMS OF REFERENCE 3
3. DOCUMENTS SUPPLIED 4
4. PROTECTION STATUS 4
ARBORICULTURAL IMPACT ASSESSMENT 6
5. DEVELOPMENT / SITE APPRAISAL 6
6. TREE CATEGORISATION 6
7. DEVELOPMENT IMPLICATIONS 7
8. SERVICE RUNS 7
9. SITE PARKING, SITE HUTS, MIXING AND MATERIAL STORAGE AREAS 8
10. TREE PROTECTION 9
11. GROUND PROTECTION 10
12. SOFT LANDSCAPING WORKS 11
13. INSTALLATION OF BOUNDARY FENCES 11
14. POST DEVELOPMENT PRESSURES 12
ARBORICULTURAL METHOD STATEMENT (PRELIMINARY) 14
15. METHOD AND PHASING OF WORKS 14
16. CONTACTS 15
17. DECLARATION 15
18. CONCLUSION 16
APPENDIX A – TREE SCHEDULE 17
APPENDIX B – GENERIC INFORMATION 23
APPENDIX C – BARRIER INFORMATION 25
REFERENCES 27
DIGITALLY APPENDED TREE PROTECTION PLAN (IN PDF FORMAT)

ABBREVIATIONS

AIA	Arboricultural Impact Assessment	CMS	Construction Method Statement
AMS	Arboricultural Method Statement	RICS	Royal Institute of Chartered Surveyors
BRE	Building Research Establishment	RPA	Root Protection Area
BS	British Standard	TPBE	Trees and People in the Built Environment
CCS	Cellular Confinement System	TPO	Tree Preservation Order
CEZ	Construction Exclusion Zone	TPP	Tree Protection Plan

1. INTRODUCTION

1.1. Harrison Arboriculture Ltd. was commissioned to provide an arboricultural report to include an arboricultural impact assessment, tree protection plan and preliminary method statement for revised development proposals at Atterbury Gardens Caversham, RG4 7HW by Neil Davis, on behalf of Steve Hicks Development.

1.2. The site co-ordinates are 51°28'41.4"N 0°59'17.4"W which lies within the administrative area of Reading Borough Council.

2. TERMS OF REFERENCE

2.1. To provide an assessment of the trees present when surveyed in December 2024 within the site boundary and those adjacent to the site within 12 times their stem diameter. The report assess their suitability for retention within the context of the revised development layout based on the details provided. It asseses which of those will either have an impact on and/or be impacted upon by the development. The report includes methods by which those impacts can be mitigated if they are available and adheres to the recommendations provided in British Standard 5837:2012 'Trees in relation to design, demolition and construction - Recommendations' (BS 5837)

2.2. The report includes:

An Arboricultural Survey

The survey provides a plan indicating the size and positions of the trees on and close to the site. The positions and dimensions are scaled based on the general topographical and building features indicated by the Ordnance Survey plan © Crown Copyright and database rights 2018 OS 100047474, the final plan will be at 1:500 or larger as per RICS (Royal Institute of Chartered Surveyors, 2014) specification, it provides:

An Impact Assessment (AIA) / Constraints Plan

Based on the tree survey and proposed layout as provided by Hicks Developments.

A Tree Protection Plan (TPP)

Predicted impacts plan

- The predicted impacts are provided on plan reference 659/2026/9/3/2024 TPP REVISION 1C and assess the expected impacts of the retained trees post development. The shade prediction is based on guidance provided by Building Research Establishment (BRE) in Site Layout Planning For Daylight and Sunlight - A guide to good practice.

An Arboricultural Method Statement

This will provide a precautionary approach appropriate to the proposals. It will describe the methods and sequence of tree protection that should be adopted in order to demonstrate that the operations can be undertaken with minimal risk of adverse impact on trees to be retained. It may require relevant information from other specialists.

2.3. The scope and limitations of the report are listed in Appendix B – Generic Information.

3. DOCUMENTS SUPPLIED

Table 1 - Document summary

Document Title	Provided by	Reference
Site Location	Hicks Developments	-
Existing Layout	Hicks Developments	-
Atterbury Gardens - Revision C - Planning	Hicks Developments	-

4. PROTECTION STATUS

4.1. Trees subject to constraints such as Tree Preservation Orders and Conservation

Areas are protected under the law. It is suggested that written confirmation from Reading Borough Council is sought formally establishing the legal status of these trees prior to any works being undertaken outside the remit of an approved planning application.

ARBORICULTURAL IMPACT ASSESSMENT

5. DEVELOPMENT / SITE APPRAISAL

5.1. The site is at Atterbury Gardens, Caversham, RG4 7HW. It was surveyed on 1 October 2024 and again 5th December 2024. The trees on and around the site reflect the second visit.

5.2. The site is a disused plot to the south of Atterbury Gardens with trees and hedges predominantly off site around the boundary.

5.3. Site topography is broadly flat with a raised area with retaining wall to the south-west and a sloping bank to the west.

5.4. The development proposal are for the construction of 4 no. detached dwellings with associated gardens and parking.

6. TREE CATEGORISATION

6.1. The method of categorisation as provided by BS5837 can be found at Appendix A. The following is a summary of the trees present on the site and their grade (table 1). A and B category trees are a material consideration in the development process; the subcategories 1, 2 and 3 are intended to reflect arboricultural, landscape and cultural values respectively.

Table 2 - Tree Category Summary

C1	**4**		**A**	0
C2	**0**		**B**	4
C3	**0**		**C**	4
B1	**0**		**U**	0
B2	**4**		**Total**	**8**
B3	**0**			
A1	**0**		**T**	**3**
A2	**0**		**G**	**1**
A3	**0**		**H**	**4**

U	0		W	0
Total	8		Total	8

7. DEVELOPMENT IMPLICATIONS

7.1. The primary criterion, in Arboricultural terms, is the retention of as many appropriate trees as practicable, allowing development to proceed whilst providing them with space and protection both during and subsequent to the completion of the development. The following is an assessment of the likely impact of the development on trees which are worthy of retention and guidance on the type and extent of protection required to ensure their continued wellbeing within the proposed development and the future landscape.

7.2. Most tree roots are typically found in the upper 600mm of soil and any excavation or compaction of the ground within these areas has the potential to damage roots and impact the future health and potentially the stability of the trees.

7.3. Soil levels over tree root areas must be left largely unaltered and the soil structure maintained. The recommended root protection area is the theoretical space required sufficient to maintain tree health.

7.4. There are no significant individuals in proximity to the proposals such that they will be impacted. The periphery of the RPA of offsite tree no. 2 sits underneath the conifer hedge which prevents access. There is a minor encroachment by the access drive into the RPA of offsite tree no. 4 this is not considered significant and there is sufficient unsurfaced ground in the vicinity to allow future root growth.

7.5. The offsite, outgrown hedges have been pruned to reduce the overhang and the proposed access paths can be installed without undue damage. The buildings are a sufficient distance to allow their construction. The overhanging faces of hedges 5, 6 and 7 will require regular trimming to maintain clearance from the proposed buildings.

8. SERVICE RUNS

8.1. Underground electricity, gas or foul and grey water services will require routing well outside the protection areas of trees which are to be retained. If the route is

likely to pass close to or within the RPA's of the retained trees prohibitions on excavation within the RPA's applies. A specific method statement will be required describing the method to be used to minimise any root damage. These may potentially involve hand digging within the root areas and laying pipework between any significant roots or moling from a position outside the RPA's

9. SITE PARKING, SITE HUTS, MIXING AND MATERIAL STORAGE AREAS

9.1. All deliveries, material storage and contractor parking shall make use of the existing access. Materials must not be stored within the root protection areas indicated by the CEZ as illustrated on plan reference 659/2026/9/3/2024 TPP REVISION 1C and marked by barrier fence on site. If additional space is required for the storage and/or mixing of building materials within or close to the RPA's of the retained trees, sufficient ground protection must be installed to prevent soil compaction and/or contamination by any spillage.

9.2. It is not known whether site huts are required for the site at this stage. If site huts are to be used they shall be sited away from the RPA's of retained trees. Site huts in close proximity to the existing tree protective barrier line which require siting on unsurfaced ground, shall have appropriate footings or be situated on a temporary surface. This is to reduce the potential for ground compaction. Site huts can be used as part of the protective barrier boundary, and in some cases, can be beneficial where installation does not conflict with the aerial parts of the tree.

9.3. If it is proposed that site huts, ground protection or stores are to be located within the RPA of retained trees for more than 3 months, a temporary irrigation and aeration system will be installed to ensure that the rooting environment is maintained in a good condition. The system will include a compressible layer of composted wood chip or forest bark over a geotextile separation layer, on which ground protection or site huts can be placed. Watering will depend on permeability of the soil, weather conditions and the extent of the area covered, but should include weekly watering from April to September, when no rainfall has occurred for more than four consecutive days.

10. TREE PROTECTION

10.1. Exclusion of construction activity from the unprotected recommended root protection areas from the outset will ensure those trees identified for retention are maintained in a safe and healthy condition preventing the following. They should be retained in place for the duration of the development to prevent:

- Root severance
- Damage to the bark, branches and trunks
- Compaction of the soil within the Construction Exclusion Zone
- Alterations in soil level
- Soil contamination by phytotoxic materials such as herbicides, petrol, oils, diesel, cement and concrete washings or other construction additives

Barrier Fence

10.2. Tree protection barriers will be erected prior to the construction process and shall remain in place until completion of the development. Signs will be attached informing all site staff that the area is to remain fenced, examples of signage can be found at the end of this document which can be laminated, or generic signs can be purchase on line.

10.3. The barrier fence in accordance with BS5837 2012 Section 6 Figure 3 (figure 1) is considered fit for purpose for this site given the size of the development and the degree of works taking place in proximity to the retained trees. The position of the Tree Protection Fencing is shown on the Tree Protection Plan reference is 659/2026/9/3/2024 TPP REVISION 1C appended at the end of this document. This should be constructed with weld mesh panels, at least 2m high, securely fixed together with wire or scaffold clamps and braced with ground anchored supports at a maximum spacing of one every two Heras panels (every 6m) to brace the fence sufficiently to resist impacts. The BS figure has been reproduced at the end of this section.

10.4. Any adjustments or removals of the tree protection measures will only be carried

out following consultation and agreement with the project arboriculturalist and/or the Local Authority tree officer.

10.5. The following shall apply to the areas within the tree protection area:

- No mechanical excavation and excavation by other means only with Arboricultural supervision
- Hand digging shall only be carried out following a written method statement approved by the project arboriculturist
- No adjustment to ground levels,
- No storage of plant or material,
- No storage or handling of any chemicals including cement washing,
- No vehicular access,
- No fires.

Figure 1 - (BS5837 Figure 3) example of fence stabilization system

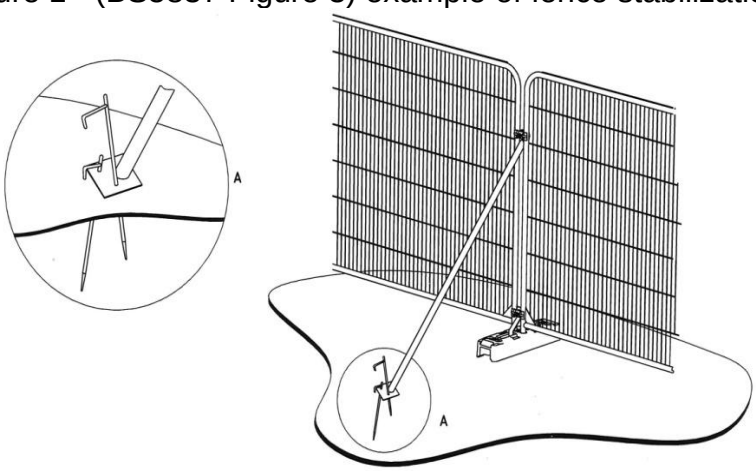

a) Stabilizer strut with base plate secured with ground pins

11. Ground Protection

11.1. Ground protection will be required where construction activity within or access across the RPA's is necessary. This is to prevent root damage and soil disturbance or compaction and is required for the duration of the development. This will be temporary where incursion is to facilitate the construction and

permanent where traffic over the root area is required subsequent to the completion of the development.

11.2. Ground protection is not required for this site.

12. SOFT LANDSCAPING WORKS

12.1. Any soft landscaping works within the development area should be in accordance with the approved landscape plan, and any specification of such works approved by the local planning authority which should adhere to the following British Standard Specifications and Codes of Practice:

- Trees should be supplied packaged in accordance with the recommendations of BS 3936:1992 Part 1 Nursery Stock - Specification for trees and shrubs;
- BS 4428:1989 - Code of Practice for General Landscaping Operations (excluding hard surfaces);
- BS 8545:2014 Trees from Nursery to Independence in the Landscape;
- The Code of Practice for Plant Handling 2002 (Horticultural Trades Association).

12.2. The construction exclusion zone will remain off limits for all site plant and machinery unless fit for purpose ground protection is installed. Pedestrian traffic must be kept to an absolute minimum only permitted for the ground preparation and landscape installation work.

12.3. The landscaping works will need to be undertaken in such a way as to avoid level changes, deep digging or mechanical rotovation. Excavation of planting pits within the RPA can cause serious harm the root system of retained trees. Planting pits within the RPA of retained trees will be excavated by hand to avoid damage to roots greater than 25mm and masses of smaller roots.

13. INSTALLATION OF BOUNDARY FENCES

13.1. Access within the CEZ for fence construction purposes can also result in soil compaction and deterioration of the soil structure. Concrete used to support the

posts is poisonous to plants and which, if not controlled, can leach into the surrounding soil.

13.2. Fencing will need to be designed and constructed to minimise the need for excavation and allow minor variations of up to 300mm between post spacing to allow repositioning of posts where roots which are greater than 25mm are discovered during the excavation of postholes within the RPA of retained trees.

13.3. Postholes within the RPA should be excavated by hand and lined with heavy gauge polythene to prevent contamination of the rooting environment.

13.4. Fencing should be installed during period of dry weather so as to maintain soil structure and prevent compaction of the rooting environment.

13.5. Where significant traffic over the RPA's is required to install the boundary fence, fit for purpose ground protection will be placed along the line of construction to prevent compaction of the rooting environment of retained trees.

13.6. Where tree canopies hang low along the line of the proposed fence crown raising to facilitate construction may be required. This must be undertaken by an arboriculturist.

13.7. Bracing any part of the boundary fence from retained trees will not be permitted under any circumstances

14. POST DEVELOPMENT PRESSURES

Shading

The expected shading cast by the trees is based on guidance provided by Building Research Establishment (BRE) in Site Layout Planning for Daylight and Sunlight - A guide to good practice (BRE, 1991). The shade predictions are illustrated on the Tree Protection Plan reference 659/2026/9/3/2024 TPP revision 1C appended at the end of this document.

Buildings.

Shade predictions are not expected to have an unreasonable impact on the availability of light to living space within the proposed dwellings.

Open spaces.

The shade cast by the retained trees is minimal both at their existing sizes and future size and are not expected to have an unreasonable impact on the reasonable enjoyment of gardens.

Privacy and screening.

The screening provided by the existing trees and hedges can be maintained.

Direct damage.

There are no retained trees which are in such close proximity that would result in direct damage at their current size or resulting from future growth. Off site hedges can be maintained as formal hedges which would maintain clearance from the buildings.

Seasonal nuisance.

The retained trees do not overhang the proposed building and leaf and debris fall is not expected to impact the dwelling over and above what can be considered typical for this type of setting.

Future pressure for removal.

The design of the site does not present any unreasonable impacts or pressures on future residents and no post development pressures for removal are expected.

ARBORICULTURAL METHOD STATEMENT (Preliminary)

15. METHOD AND PHASING OF WORKS

PRE CONSTRUCTION

15.1. All permitted or approved tree work will be undertaken prior to the commencement of site preparation, demolition or construction works.

15.2. Tree works are not required. Should they become necessary they will be carried out in accordance with the British Standard *"Recommendations for Tree Work"* BS3998:2010, by suitably qualified and experienced professional arborists. Under no circumstances shall site personnel undertake any tree pruning operations.

15.3. Prior to the start of any construction, including material storage, protective barrier will be erected as per BS5837 figure 3 as illustrated in section 10.

15.4. It will be positioned as denoted on the tree protection plan reference 659/2026/9/3/2024 TPP revision 1C.

15.5. Signage informing all site workers that the area is to remain protected for the duration of the development is to be attached to the fence. An example of signage can be found at the end of this document which can be printed, laminated and securely attached to the barrier fence if required.

15.6. The project arboriculturalist will be on hand to provide advice and/or supervision if required.

CONSTRUCTION

15.7. All barrier fence and ground protection is to remain serviceable and in position for the duration of the development. No adjustments are to be made unless with the written agreement of the planning/arboricultural officer.

15.8. Landscaping works may be necessary prior to the completion of the build. In this case prohibitions on traffic and movement over the Construction Exclusion Zones will remain in effect and activity will require additional fit for purpose temporary ground protection, no machine movements and the transport of materials into these areas will be made manually.

15.9. The project arboriculturalist will be on hand to provide arboricultural advice if it is needed.

POST CONSTRUCTION

15.10. Barrier fence and temporary ground protection is to be removed.

15.11. Site reinstatement and landscaping will be undertaken. Prohibitions on traffic and movement over the Construction Exclusion Zones will remain in effect and activity will require additional fit for purpose temporary ground protection, no machine movements and the transport of materials into these areas will be made manually.

16. CONTACTS

Organisation	Contact Name	Contact number	Email / online contact
Agent	Neil Davis, Davis Planning Ltd. Chartered Town Planners	07821 158236	
Harrison Arboriculture	Mark Harrison	07915 847 367	mark@harrisonarboriculture.co.uk
Reading Borough Council	Case officer		

17. DECLARATION

17.1. The statements in this report are based on information provided by the client. It does not consider, the effects of extremes of climate, vandalism or accident. Harrison Arboriculture cannot accept liability in connection with these factors, nor where prescribed work is not carried out in a correct and professional manner in accordance with current good practice.

17.2. The authority of this report if affective for two years from the date of the survey or when any site conditions change or pruning or other works unspecified in the Report are carried out to, or affecting, the subject tree(s), whichever is the sooner. It is recommended that a new survey be carried out after twelve months or following any severe weather event or change in the site.

18. CONCLUSION

- No tree removals are required to facilitate the proposals.
- Post development pressures for works on the retained trees are not expected as a result of the proposal.
- The proposed development would not have adverse impacts on the long-term vitality of the retained trees providing the methodology set out in this document are followed.

APPENDIX A – TREE SCHEDULE

Site: Atterbury Gardens Caversham, RG4 7HW

Date: 5 December 2024

* Recommendations are provided based on the initial survey independent of the proposal by default. Recommendations in italics within parentheses relate to works required to facilitate the development as identified by the impact assessment.

Tree no	Species	Height/m	Stem Diameter/mm (no. stems)	Age	Condition		Life Exp / yrs	Canopy Spread/m				Comments	Recommendations	Category	Root protection	
					Physiological	Structural		N	E	S	W				Radius/m	Area/sqm
G1	Carpinus betulus (Hornbeam),Betula pendula (Birch),Shrubs	10	200(6)	Semi Mature	Good	Good	20+					No significant defects noted.	None required at time of inspection.	B2	5.88	108.63
T2	Cedrus deodara (Cedar)	15	300(3)	Mature	Fair	Fair	20+	6	6	6	6	Off site. Diameter Estimated. Previously crown reduced.	None required at time of inspection.	B2	6.24	122.34
T3	Carpinus betulus (Hornbeam)	15	200(3)	Mature	Fair	Fair	20+					No significant defects noted (outgrown hedge)	None required at time of inspection.	B2	4.15	54.11
T4	Chamaecyparis lawsoniana (False Cypress)	20	350(3)	Mature	Fair	Fair	20+	5	5	5	5	No significant defects noted. Off site. Diameter Estimated (outgrown hedge)	None required at time of inspection.	B2	7.27	166.06
H5	x Cupressocyparis leylandii (Leyland Cypress),Fagus sylvatica (Beech),Prunus cerasifera 'Pissardii' (Cherry)	10	200	Mature	Fair	Fair	20+	5	5	5	5	No significant defects noted. Off site. Diameter Estimated. Previously crown reduced. Dense Ivy (overhanging laterals from hedge)	None required at time of inspection.	C1	-	-
T6	Fagus sylvatica (Beech)	10	300(1)	Mature	Fair	Fair	20+	2	2	2	1	Off site. Diameter Estimated. Previously crown reduced.	None required at time of inspection.	C1	3.6	40.72
H7	Corylus avellana (Hazel),Crataegus monogyna (Thorn),Shrubs	10	300(1)	Mature	Fair	Fair	20+					Off site. Diameter Estimated. Previously crown reduced.	None required at time of inspection.	C1	3.6	40.72
H8	x Cupressocyparis leylandii (Leyland Cypress)	10	200	Mature	Fair	Fair	20+					No significant defects noted. Off site. Diameter Estimated. Previously crown reduced. Dense Ivy (overhanging laterals from hedge)	None required at time of inspection.	C1	-	-

Tree no	Species	Height/m	Stem Diameter/mm (no. stems)	Age	Condition		Life Exp / yrs	Canopy Spread/m				Comments	Recommendations	Category	Root protection	
					Physiological	Structural		N	E	S	W				Radius/m	Area/sqm
H9	Fagus sylvatica (Beech)	10	200	Mature	Fair	Fair	20+	5	5	5	5	No significant defects noted. Off site. Diameter Estimated. Previously crown reduced. Dense Ivy (overhanging laterals from hedge)	None required at time of inspection.	C1	-	-

Key

1. Tree Ref No:

   This relates to the numbers on the plan. Where trees have been tagged, the tag number will be used as the tree reference number. Individual trees are not prefixed and prefixed with a G, W or H represent a group, woodland or hedge respectively.

2. Species:

   The name given is the Latin name by default. Where common names are given they are shown in parentheses.

3. DBH (Diameter at breast height):

   This is the stem diameter at 1.5 metres (breast height') above ground level, given in millimetres. Where trees are multi-stemmed trees the square root of the combined stem diameter is calculated.

4. H (Height):

   The height of the tree measured where possible or estimated and recorded in metres.

5. Canopy Spread (Crown radius):

   The average crown spread taken from the centre of the trunk to the tips of the live lateral branches given in metres. Measurements following the compass points North, East, South and West.

6. Canopy height:

   Ave - Average Crown Height Clearance: (HaB Height above ground) — ground clearance of the canopy for each cardinal point given in metres.

7. First significant branch

   The height of the first significant branch the direction of which is shown in parentheses.

8. Age:

   Age assessment is based on growth stages rather than actual age in years and are recorded as follows

   Y Young

SM Semi Mature – having reached up to 1/3 life expectancy

EM Early mature - having reached 1/3 of the expected life expectancy and is transitioning into maturity.

M Mature - over 2/3 life expectancy

OM Over-mature - fully mature, past peak condition and beginning to decline

V Veteran - trees of interest biologically, aesthetically or culturally because of significant age.

9. Condition

Physiological – Assessment of the overall health and vigour of the tree compared to what would normally be considered typical of a healthy tree of the species. Condition categories are given as good, fair, poor or dead.

Structural – Assessment of the structural stability of the tree based on visible signs of decay, damage, genetic weaknesses or faults. Structural categories are given as good, fair, poor or dead

10. Life Expectancy:

An estimate of the potential worthwhile remaining contribution – future life expectancy of the tree(s) in the present setting given normal circumstances, given in years (< = less than > = greater than) categorised <10 years, 10 – 20 years, 20 – 40 years and < 40 years.

11. Category:

A quality assessment of the trees based on criteria detailed in BS5837:2012 Table 1

U: Trees unsuitable for retention

A: Those of high quality and value

B: Those of moderate quality and value

C: Those of low quality and value

Assessments are based on their condition on the day of inspection and cannot account for future changes in circumstances.

12. Recommendations:

Preliminary management recommendations in relation to the proposed

development are made where appropriate. These may include remedial tree works that are deemed necessary to improve the quality of the tree or for safety reasons. Recommended tree works will be required to be in accordance with British Standard 3998:2010 Tree Work.

13. Root Protection

Radius – nominal circle centred at the stem centre providing the recommended radius of a circular area necessary for the continue wellbeing of the tree based on recommendations provided in British Standard 5837:2012

Area – The area necessary for the continue wellbeing of the tree based on recommendations provided in British Standard 5837:2012

Table 1

Category and definition	***Criteria***			***Identification on plan***
<u>Category U</u> Those in such a condition that cannot realistically be retained as living trees in the context of the current land use for longer than 10 years	• Trees that have a serious, irremediable, structural defect, such that their early loss is expected due to collapse, including those that will become unviable after removal of other category U trees (e.g. where, for whatever reason, the loss of companion shelter cannot be mitigated by pruning) • Trees that are dead or are showing signs of significant, immediate, and irreversible overall decline • Trees infected with pathogens of significance to the health and/or safety of other trees nearby or very low quality trees suppressing adjacent trees of better quality *NOTE Category U trees can have existing or potential conservation value which it might be desirable to preserve*			DARK RED
TREES TO BE CONSIDERED FOR RETENTION				
Category and definition	**Criteria — Subcategories**			
	1 Mainly arboricultural values	**2 Mainly landscape values**	**3 Mainly cultural values, including conservation**	**Identification on plan**
<u>Category A</u> **Tree of high quality** with an estimated remaining life expectancy of at least 40 years	Trees that are particularly good examples of their species, especially if rare or unusual, or essential components of groups, or of formal or semi-formal arboricultural features (e.g. the dominant and/or principal trees within an avenue)	Trees, groups or woodlands of particular visual importance as arboricultural and/or landscape features	Trees, groups or woodlands of significant conservation, historical, commemorative or other value (e.g. veteran trees or wood-pasture)	LIGHT GREEN
<u>Category B.</u> **Trees of moderate quality** with an estimated remaining life expectancy of at least 20 years	Trees that might be included in category A, but are downgraded because of impaired condition (e.g. presence of remediable defects including unsympathetic past management and minor storm damage) such that they are unlikely to be suitable for retention beyond 40 years; of trees lacking the special quality necessary to merit A categorisation	Trees present in numbers, usually as groups or woodlands, such that they form distinct landscape features, thereby attracting a higher collective rating than they might as individuals but which are not, individually, essential components of formal or semi-formal arboricultural features (e.g. trees of moderate quality within an avenue that includes better, A category specimens), or trees situated mainly internally to the site, therefore individually having little visual impact on the wider locality	Trees with material conservation or other cultural benefits	MID BLUE
<u>Category C.</u> **Trees of low quality** with an estimated life expectancy of at least 10 years, or younger trees with a stem diameter below 150 mm	Unremarkable trees of very limited merit or such impaired condition that they do not qualify in higher categories	Trees present in groups or woodlands, but without this conferring on them significantly greater landscape value, and/or trees offering low or only temporary screening benefit	Trees with very limited conservation or other cultural benefits	GREY
	NOTE Whilst C category trees will usually not be retained where they would impose a significant constraint on development, young trees with a stem diameter of less than 150 mm should be considered for relocation			

Appendix B – Generic information

TREE SURVEY

Scope and Limitations of Survey

1. This survey and report are concerned with the arboricultural aspects of the site only.
2. Only trees of significant stature were surveyed. Trees with a stem diameter of less than 75mm when measured at 1.5m above ground level (DBH) have been excluded unless they have particular merit that warrants comment.
3. The survey is restricted to trees that will be affected by the development within and adjacent to the site in accordance with guidelines detailed in British Standard 5837:2012 and with good practice as promoted by the Arboricultural Association and Arboricultural and Forestry Advisory Group (AFAG).
4. This survey is based on a ground level tree assessment and examination of external features only — described as the 'Visual Tree Assessment' (Mattheck and Breloer, The Body Language of Trees, DoE booklet Research for Amenity Trees No. 4, 1994). Although the structural conditions of the trees are considered, and remedial action may be recommended it does not constitute a comprehensive Health and Safety report and if one is required it should be commissioned separately. No tissue samples were taken, or internal investigations carried out.
5. No soil samples were taken, or soil analyses carried out and the risk of tree-related subsidence to structures has not been assessed.
6. Consideration should be given to the timing of the proposed tree works to avoid the active growing period of trees. Tree work should ideally be carried out during the dormant period from November through to February and then again from June to August.
7. Although considered and wildlife habitat potential highlighted, no specific wildlife assessment has been carried out. It should be noted that The Wildlife and Countryside Act 1981, as amended by the Countryside Rights of Way Act 2000 and Conservation - Natural Habitats -Regulations 1994 provides statutory

protection to birds, bats and other species that inhabit trees.

8. This report should be read in conjunction with the Tree Protection Plan. The position of all trees and existing or proposed features are based on the plans provided by the client or other instructed professionals. Where trees have been omitted from the plans provided their position has been estimated or where possible plotted by triangulation.

Survey Method

1. In order to provide a systematic and consistent evaluation of the trees situated on the site, the following methodology was used in accordance with BS 5837: 2012.
2. The stem diameters of single stemmed trees were measured in millimetres at 1.5m above ground level (DBH). Multi-stemmed trees were measured at 1.5m above ground level and the RPA arrived at as per section 4.6a BS 5837:2012.
3. The height of visible trees was measured using a clinometer and estimated visually where view to the upper canopy obstructed.
4. The crown radii were measured where possible or estimated where access is restricted and are given for each cardinal point.
5. Where access to trees was obstructed or obscured, dimensions have been estimated.
6. Each tree has been assessed in terms of its arboricultural, landscape, cultural and conservation values in accordance with BS 5837: 2012 which are detailed in the Tree Schedule.

Harrison Arboriculture Ltd.

admin@harrisonarboriculture.co.uk

CONSTRUCTION EXCLUSION ZONE

BARRIER FENCE MUST NOT BE MOVED

THE FOLLOWING IS PROHIBITED WITHIN THE PROTECTED AREA

No excavation, mechanical or otherwise
No adjustment to ground levels
No storage of plant or material
No storage or handling of any chemicals
No vehicular access
No fires

Additional examples of suitable signage

REFERENCES

BRE. (1991). *Site Layout Planning For Daylight and Sunlight - A guide to good practice.* Construction Research Comunications Ltd.

British Standards Institute. (2015). Surveying for Bats in Trees and Woodland. *BS 8596*. British Standards Institute.

Countryside Rights of Way Act . (2000). London: HMSO.

H., M. C. (1994). *The body language of trees, Research for Amenity Trees no. 4.* HMSO.

K. Rogers, V. L. (2014). Trees and People in the Built Environment II. *Determining Tree Growth in the Urban Forest*, (p. 84).

Lonsdale, D. (2001). *Priciples of Tree Hazard Assessment and Management.* London: HMSO.

Rogers etal. (2014). TPBE II paper - Determining tree growth in the urban forest. Institute of Charterred Foresters.

Technical Committee B/213, Trees and tree work. (2010). *Tree work - Recommendations.* London: BSI Standards Limited.

Technical Committee B/213, Trees and tree work. (2012). *Trees in relation to design, demolition and construction - Recomendations.* London: BSI Standards Limited.

Wildlife and Countryside Act. (1981). London: HMSO.

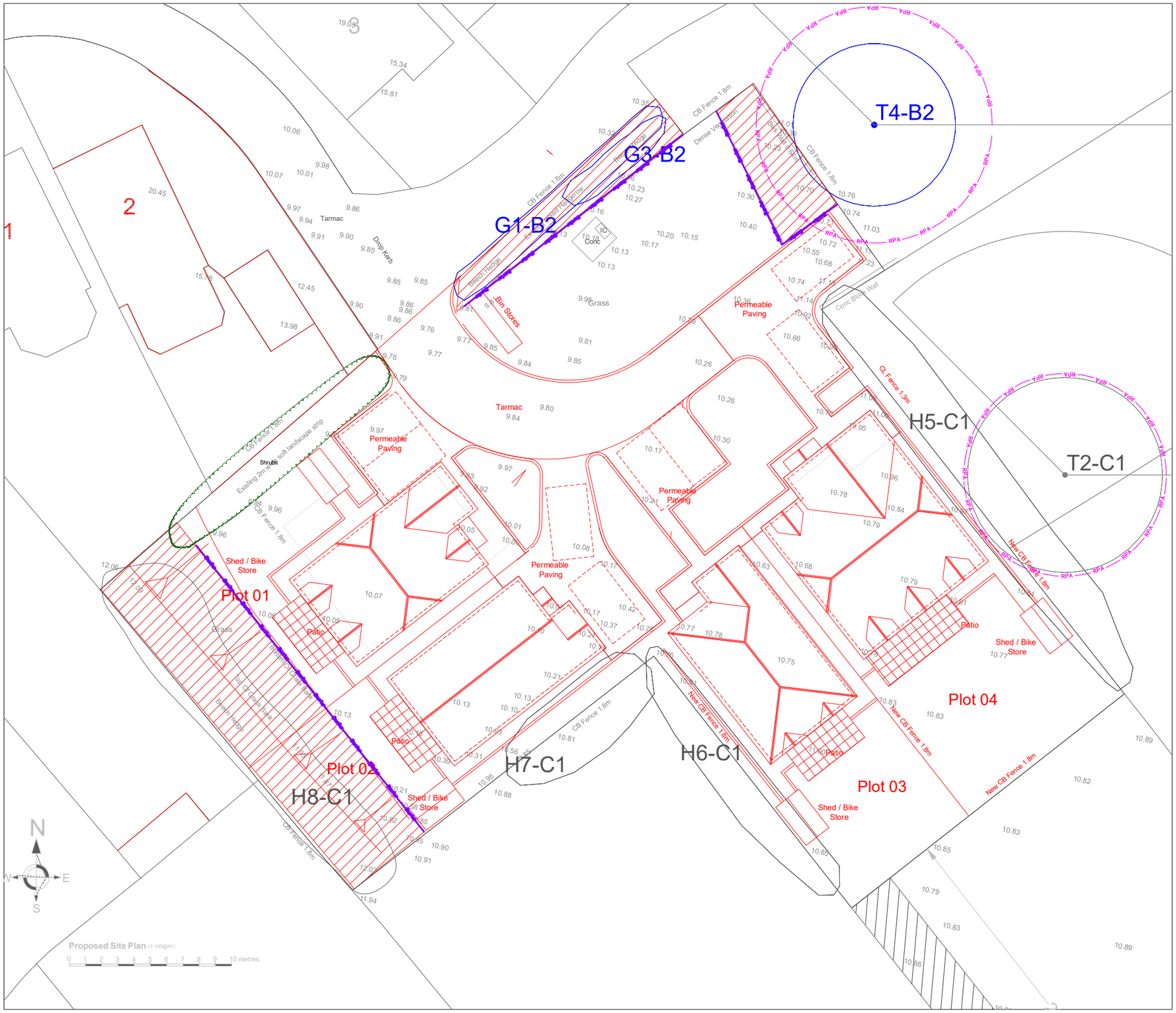

© Crown Copyright and database rights 2018 OS 100047474.

Legend

Category A trees - Trees of high quality and value such that they make a substantial existing and future contribution for an expected 40 years or more.

Category B trees - Trees of moderate quality and value such that they make a significant future contribution for an expected 20 years or more.

Category C trees - Trees of low quality and value which might be expected to remain for around 10 years or less or with stems of less than 150 mm diameter.

Category U trees - Trees of low quality and value which are considered to have little or no potential due to to disease or defects.

Number suffixes relate to the subcategories 1, 2, and 3 which are intended to reflect arboricultural, landscape and cultural values respectively

Direction of the first significant branch

The root protection area is the theoretical area considered necessary to provide sufficient room for the root growth required to support the tree - activity impacting the soil should be avoided.

The construction exclusion zone (CEZ) is the area within the root protection area. Access into this area should be prohibited for the duration of the project unless suitably protected to prevent any construction activities including storage.

Barrier fence to be installed as per BS5837, section 6, Figure 3.

Figure 3 BS 5837 : 2012 - Default Specification for Protective Barrier

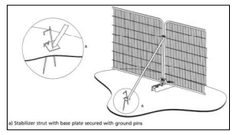

CLIENT	Steve Hicks
SITE	Atterbury Gardens, Caversham.
DRAWING — Title	Tree Protection Plan
DRAWING — Version	1 — Revision C
DRAWING — Base plan ref.	Proposed Site Plan
DRAWING NO.	659-2026-9/3/2024 TPP
SCALE	1:200 @ A3
DATE	17 June 2024
DRAWN BY	M.Harrison

Harrison Arboriculture Ltd.
Telephone - 07915 847 367
email: admin@harrisonarboriculture.co.uk