MARK WELBY
CONSULTING ARBORISTS

Arboricultural Assessment & Method Statement

for proposed development at

Meadow View, Blagrave Lane, Caversham, Reading, RG4 7DX

On Behalf of: **Tara Walsh and Sean Carney**

Reference: **AIA.MVBL.2207**

Date Issued: **26 July 2022**

Revision B issued 2025.06.10

Mark Welby DipArb(RFS), TechCert(ArborA), FArborA
01730 239 492 | mark@mwelby.com | www.mwelby.com
M Welby Ltd. Hampshire, UK

AA Registered CONSULTANT trees.org.uk

Arboricultural ASSOCIATION Fellow Member

Executive Summary

Trees are a consideration in this planning application. Therefore, this report has been drafted to provide the information required to enable the local planning authority to meet the duty placed upon them by section 197 of the Town and Country Planning Act (as amended, 2021).

Included are a BS5837:2012 compliant tree survey, arboricultural impact assessment, and a tree protection strategy including a method statement and protection plan.

Two trees and a length of hedgerow trees will be removed.

The replacement dwelling broadly follows the existing footprint. There is a small encroachment into the theoretical RPA of the off-site hazel. Given the low value of the tree, specialist foundations and/or parking surfacing is not deemed applicable or necessary.

Tree protection commitments comprise erecting barriers and a pre-start audit/meeting.

Provided the protection strategy is implemented as outlined, it is my opinion that this application is of low arboricultural impact, and thus acceptable.

Table of Contents

1. Instructions and Terms of Reference 3
- Documents Supplied 3
- Statutory Legislation 3

2. Tree Survey-Scope and Methodology 4

3. Arboricultural Impact Assessment 5
- Proposal 5
- Tree Removals 5
- Tree Surgery 5
- Construction Impact 5
- Supervision & Monitoring 5
- Barrier Type 5
- Service & Utility Provisions 5
- Summary 6

4. Arboricultural Method Statement (AMS) 7
- Phasing 7
- Pre-Start Confirmation 8
- Construction Exclusion Zone (CEZ) 8
- Protection Barriers 8
- Ground Protection 9
- Site Induction 10
- Tree Surgery 11
- Installation of Underground Services 11
- Fencepost/Hoarding Installation in RPA 12

5. Limitations of Use and Copyright. 13

Appendices

i. Tree Protection Barriers 15

ii. Tree Categories Explained 17

iii. Protection Plan 18

1. Instructions and Terms of Reference

1.1. In July 2022, I was instructed by Tara Walsh and Sean Carney to undertake a tree survey and subsequently to produce this report to accompany a planning application for a replacement dwelling on the site known as Meadow View, Blagrave Lane, Caversham, Reading, RG4 7DX.

1.2. Following the recommendations of the British Standard[1], this report includes the necessary information to enable the local planning authority to meet the duty placed upon them by section 197 of the Town and Country Planning Act (as amended, 2021).

1.3. It demonstrates that the impact, both direct and indirect, of the proposal, has been assessed and where appropriate, mitigation, compensation and tree protection proposed.

1.4. Correct implementation of the tree protection specified within this report is critical for ensuring the retained trees are successfully protected throughout the construction process.

1.5. The assessment considers the impact of the proposal on the constraint presented by trees retained within the site, and those on adjacent land. Such impact can be caused directly through construction damage and indirectly from post-development resentment and pressure to detrimentally prune or remove the trees. The latter is often due to a poor juxtaposition between the proposal and the trees.

1.6. The root protection area (RPA) for each tree represents a minimum area in m^2 that should be left undisturbed around each retained tree. This is initially represented by a circle but is fundamentally an area of rooting volume. This is often adjusted to account for constraints to root growth within the site (primarily highways and buildings). Recommendations are provided in the British Standard as to the protection of existing trees during the construction process. This is achieved by ensuring a tree protection strategy is implemented before any demolition or construction on site.

Documents Supplied

- Proposed: 3806 - 201 Site Plan.dwg.

Statutory Legislation

1.7. Reading Borough Council do not offer on-line tree preservation orders (TPOs), and Conservation Area mapping and I have not made specific enquiries as to the legal status of the trees on the site.

1.8. They do provide a directory (word document) of TPOs, but with no mapping. There are no TPOs listed at Meadow View.

[1]BS5837:2012 Trees in relation to design, demolition and construction

2. Tree Survey-Scope and Methodology

2.1. Tree survey data can be found on the appended plan.

2.2. The tree survey has been carried out following the recommendations of The British Standard and the trees are assessed objectively and without reference to any site layout proposals. Categories are based on each tree's health and condition, together with an assessment of its life expectancy if its surroundings were to be unchanged.

2.3. The reference numbers of surveyed trees and groups of trees are shown on the tree reference plan, which is appended to this report and based on the supplied survey drawing. Stem locations within groups may be estimated, and indicative of canopy only.

2.4. The tree survey was carried out from ground level only, with the aid of binoculars as necessary, following the Visual Tree Assessment[2] (VTA) method.

2.5. Where trees are located on neighbouring land an estimated appraisal has been made of their quality and dimensions.

2.6. Where stems or branches are obscured by ivy or other materials a full assessment of those parts will not be possible.

2.7. Tree heights were measured with a clinometer or estimated in relation to those measured.

2.8. Trunk diameters are measured at 1.5m above ground level, where this is not possible, then Figure C.1 of the British Standard is followed.

2.9. Tree canopies, where markedly asymmetrical, were measured (or estimated by pacing) in four directions using a laser measure. Symmetrical canopies are measured in one direction only, with dimensions in the remaining directions assumed to be similar. For the canopies of groups of trees, the maximum radius for each compass point is measured (more complicated groups will have further notes taken and an accurate representation will be shown on the plan).

2.10. All estimated dimensions are noted in the data.

[2] Mattheck, C. & Breloer, H., 1998. The Body Language of Trees: A Handbook for Failure Analysis. London:H.M.S.O.

3. Arboricultural Impact Assessment

Proposal

3.1. It is proposed to replace the existing dwelling and add a detached garage. The location and layout of which can be seen on the appended plan.

Tree Removals

3.2. Two trees and a section of hedge will be removed: a holly, an apple, and a hedge of mixed species.

3.3. All are of low value and are listed on the appended tree protection plan.

Tree Surgery

3.4. It is proposed to cut back the overhanging hazel #01.

Construction Impact

3.5. The footprint of the garage, and most of the new dwelling are outside RPAs (the new building broadly follows the existing footprint). However, there is a small encroachment into the theoretical RPA of the off-site hazel from the foundation and driveway. Given the low value of the tree, specialist foundations and/or parking surfacing seems onerous and is not deemed applicable or necessary.

Supervision & Monitoring

3.6. Some sites require more arboricultural involvement during the construction process than others. This is typically commensurate with the pressure on retained trees and the complexity of the tree protection strategy.

3.7. For this project a pre-start meeting/tree protection audit before demolition starts is proposed. Supervision will also be required for two separate tasks.

3.8. It is my opinion that regular monitoring visits would not be necessary for this project.

Barrier Type

3.9. As the proposed construction work is comparatively 'low impact', the default British Standard tree protection specification seems somewhat onerous. Therefore, it is my opinion that an adequate level of protection can be provided with a lesser specification.

3.10. Alternative specifications can be found at Appendix i. TPF 2 or TPF 3 are proposed.

Service & Utility Provisions

3.11. It is presumed that the existing feeds will be reused where possible. There is also adequate clearance from RPAs to install new connections, should they be needed.

Summary

3.12. Provided the tree protection strategy is implemented as outlined in the following method statement, it is my opinion that this application is of **low** arboricultural impact, and thus acceptable.

3.13. Should the council wish to see more onerous tree protection methods, this can be ensured via an appropriately worded planning condition and should not be the basis for a reason for refusal.

4. Arboricultural Method Statement (AMS)

4.1. The tree protection on this site is subject to implementation as detailed in the following sections.

4.2. The recommendations of the British Standard have been applied where viable. Where deviations from the preferred approach are required, impact on any retained trees is minimised through a combination of supervision from an arboriculturist and adherence to the associated method statement.

4.3. It is imperative that the strategy is followed to avoid not only impact upon the trees, but to adhere to any planning conditions, once permission is granted.

4.4. The information within this section must be passed to the site foreman and cascaded to all relevant personnel involved in the project.

4.5. Any questions about the content or its implementation should be directed to **Mark Welby on 01730 239492,** before action is taken.

4.6. A tree protection plan showing the types of tree protection and their locations is appended. It includes the tree survey data, existing site features and the approved construction. The plan must be read in conjunction with this method statement.

Phasing

4.7. It is essential that the following phasing is followed if trees are to be effectively protected throughout construction.

1	Tree removals/surgery
2	Installation of protection barriers (Appendix i: TPF 2 or 3)
3	Confirmation that tree protection barriers are installed to be sent to LPA
4	Demolition phase
5	Excavation for any groundworks & service trenches
6	Construction phase
7	Removal of barriers after all external construction work has been completed

Table 1: Timing of Operations

4.9. The above has been drafted at planning stage. Should any of the protection measures prove incompatible with elements of the build program, please contact the project arboriculturist to discuss options.

Pre-Start Confirmation

4.10. Probably the most important step in the tree protection process; confirmation that the tree protection barriers are in place must be forwarded to the LPA before any external work starts. This may be a photographic record sent via email.

Construction Exclusion Zone (CEZ)

4.11. The CEZ is a root sensitive area where construction activities are to be excluded. The default method of doing so is through the installation of tree protection barriers. If construction access is required in the CEZ then ground protection can be used to facilitate this.

4.12. It is the responsibility of everyone engaged in the construction process to respect the tree protection measures and observe the necessary precautions within and adjacent to them.

4.13. Inside the exclusion zone, the following shall apply:

- No mechanical excavation whatsoever;
- No excavation by any other means without arboricultural site supervision;
- No hand digging without a written method statement having first been approved by the project arboriculturist;
- No lowering of levels for any purpose (except removal of grass sward using hand tools);
- No storage of plant or materials;
- No storage or handling of any chemical including cement washings;
- No vehicular access (unless ground protection is installed);
- No fire lighting.

4.15. In addition to the above, further precautions are necessary adjacent to trees:

- No substances injurious to tree health, including fuels, oil, bitumen, cement (including cement washings), builder's sand, concrete mixing and other chemicals shall be stored or used within or directly adjacent to the protection area of retained trees;
- No fire shall be lit such that flames come within 5m of tree foliage.

4.16. Variation from the above may be specified in the following sections of this method statement. This is only acceptable where detailed and will typically be subject to supervision by the arboriculturist.

Protection Barriers

4.17. Barriers must be fit for the purpose of excluding construction activity and appropriate to the degree and proximity of work taking place around the retained tree(s). Barriers should be maintained to ensure that they remain rigid and complete.

4.18. See Appendix *i* for barrier specifications.

4.19. On this project, types TPF 2 or TPF 3 are to be used.

Ground Protection

4.20. If required to facilitate access within the CEZ (or as shown on the appended tree protection plan), ground protection is to be installed. If not already included on the tree protection plan, it must be approved in writing by the local planning authority before implementation. The ground protection must be capable of

Tree protection barriers and scaffold ground protection

Tree protection barriers & trackmat ground protection

supporting the expected loads and avoiding rutting, compaction and damage to the soil: as advised in section 6.2.3 of the British Standard.

4.21. Stages of ground protection installation:

1. If required, dismantle barriers and re-erect them to protect any newly exposed CEZ not to be covered by ground protection;
2. Any shrubs, saplings or trees to be removed, are to be cut or ground out to just below ground level rather than grubbed or winched out, which can damage roots of retained trees;
3. Lay woven geotextile over existing ground surface by hand;
4. Cover the area with compressible layer (200mm of woodchip, for example), using hand tools only;
5. Cover compressible layer with side butting scaffold boards, plywood boards of proprietary trackway/ trackmats;
6. Confirm surface is acceptable for use with project arboriculturist;
7. Area ready for construction access;
8. Any scaffolding required within the area will be erected with the uprights placed on spreader boards;
9. The boarding will be left in place until the construction works are finished.

4.22. A single thickness of boarding laid on the soil surface will provide sufficient protection for pedestrian loads. However, for wheeled or tracked construction traffic movements within the RPA, ground protection will involve the use of temporary geocell/cellular confinement systems, reinforced concrete slabs or track-board systems details of which are to be specified by the project engineer and approved for use by the project arboriculturist and local authority before construction commences.

4.23. Track-boards can be sourced from Trakmats Europe Ltd, 0845 6435388, www. trakmatseurope.com, or groundguards.com

4.24. There is to be no excavation within ground protection area whatsoever. This includes installation of services and associated utilities, without prior approval.

Site Induction

4.25. All site staff are to be briefed on the tree protection strategy for the site as part of the general site induction procedure. This can be carried out by the site manager once he has been briefed by the project arboriculturist.

4.26. In general, this will include the following:

1. Explanation of the purpose of the tree protection barriers and any ground protection
2. Explanation of the demolition procedures near trees
3. Explanation of the sensitive/supervised excavation areas

4. What do do if access is needed within a protected area for any reason
5. What to do if damage occurs to any tree protection barriers and how to contact the project arboriculturist if necessary.

Tree Surgery

4.27. Should any pruning work be required, the following must be adhered to once any requisite permissions are obtained.

4.28. Tree surgery work is listed in the schedule on the appended plan, along with all trees to be removed.

4.29. All work will be carried out in accordance with BS3998[3] industry best practice and in line with any works already agreed with the council.

4.30. The statutory protection[4] [5] will be adhered to. If further advice is required, particularly if bats are discovered during tree work, it will be obtained from Natural England or other competent persons and recommendations adhered to.

4.31. The stumps of any trees removed from within the Construction Exclusion Zone or the RPAs of retained trees will be either cut flush to ground level and left in situ or ground out using a stump grinder. They will not be winched out.

4.32. All operations shall be carefully carried out to avoid damage to the trees being treated or neighbouring trees. No trees to be retained shall be used for anchorage or winching purposes.

Installation of Underground Services

4.33. Mechanical trenching for the installation of underground apparatus and drainage severs any roots present and can change the local soil hydrology in a way that adversely affects the health of the tree. For this reason, particular care must be taken in the routeing and methods of installation of all underground apparatus. Wherever possible, apparatus must be routed outside RPAs. Where this is not possible, it is preferable to keep apparatus together in common ducts. Inspection chambers should be sited outside the RPA.

4.34. Where underground apparatus is to pass within the RPA, detailed plans showing the proposed routeing must be drawn up in conjunction with the project arboriculturist. In such cases, trenchless insertion methods should be used: Microtunnelling, Surface-launched directional drilling, Pipe ramming or Impact moling (see BS5837:2012 Table 3), with entry and retrieval pits being sited outside the RPA. Provided that roots can be retained and protected, excavation using hand-held tools might be acceptable for shallow service runs. If this is case, the following methodology must be followed:

---

[3] *BS3998:2010- Recommendations for Tree Work.* London: British Standards Institute
[4] *Wildlife and Countryside Act.* (1981) London: HMSO.
[5] *Conservation of Habitats and Species Regulations (2017)* London: HMSO.

4.35. Stages for installing services:

1. Contact project arboriculturist to hold pre-start site meeting and 'toolbox' talk before starting work.
2. Remove just enough tree protection fencing to allow access to area and facilitate trenching.
3. Remove any surface vegetation or existing hard surfaces using hand tools.
4. Using and air-pick excavate the trench, keeping to minimum dimensions required.
5. Roots occurring in clumps of 25 mm diameter and over are encountered they will be retained and kept damp by covering with hessian (re-wetted as required). If required, these should be severed only following consultation with an arboriculturist; as such roots might be essential to the tree's health and stability.
6. Feed in services.
7. Backfill trench with 200-300mm depth of excavated soil, or a mixture of excavated and imported topsoil to BS3882: 2015, firming down with heels.
8. Repeat step 7 until trench is filled.
9. Re-erect tree protection fencing as per approved plan.

4.50. The method of excavation above, for trenching within RPAs, is using air excavation. This tool utilises compressed air to remove soil from around tree roots causing minimal damage and can be run off a typical site compressor. I can provide details of contractors supplying air excavation services if required.

4.51. Alternatively, trenchless technology, such as thrust boring can be used in some instances and is particularly effective as it can pass directly under the tree, at a depth which is likely to avoid almost all impact on roots of the subject tree. As no access/thrust pits will be located within the RPAs of the subject trees, the need for arboricultural supervision is limited.

4.52. Reference can be made to NJUG Vol 4[6] for guidance, but any approach must be approved by the project arboriculturist and brought to the attention of the local authority tree officer.

Fencepost/Hoarding Installation in RPA

4.53. Stages for installing wooden posts:

No plant machinery to be used in the area for whatever reason

1. Remove TPF to allow access to area. If working inside the tree's RPA, ground protection boarding must be used to avoid compaction and contamination of the root zone.
2. Dig postholes using hand tools, avoiding damage to the protective bark covering larger roots. Roots smaller than 25mm diameter may be pruned back using either secateurs or a hand saw, leaving a clean cut.

6 National Joint Utilities Group. (2010). Volume 4: NJUG Guidelines For The Planning, Installation And Maintenance Of Utility Apparatus In Proximity To Trees (Issue 2) – Operatives Handbook. NJUG.

3. Damage or severance of roots above 25mm diameter must be avoided. If roots of this size are discovered, the hole should be relocated. If there are a large number of such roots it may be necessary to relocate the hole by half a fence panels length and adjust the fence panels accordingly.
4. Line hole with non-porous lining, for example, durable polyethene bag.
5. Insert post and fill post-hole with concrete to just below ground level.
6. Trim polyethene to ground level and fill with clean topsoil.
7. Reinstall TPF as approved.

5. Limitations of Use and Copyright.

Copyright M Welby Ltd. All rights reserved.

No part of this report may be copied or reproduced by any means without prior written permission from M Welby Ltd. If you have received this report in error, please destroy all copies in your possession or control and notify M Welby Ltd. This report has been prepared for the exclusive use of the commissioning party and unless otherwise agreed in writing by M Welby Ltd, no other party may use, make use of or rely on the contents of the report. No liability is accepted by M Welby Ltd for any use of this report, other than for the purposes for which it was originally prepared and provided. Opinions and information provided in the report are on the basis of M Welby Ltd using due skill, care and diligence in the preparation of the same and no explicit warranty is provided as to their accuracy. It should be noted, and it is expressly stated that no independent verification of any of the documents or information supplied to M Welby Ltd. has been made.

Appendices

Intentionally blank

i. Tree Protection Barriers

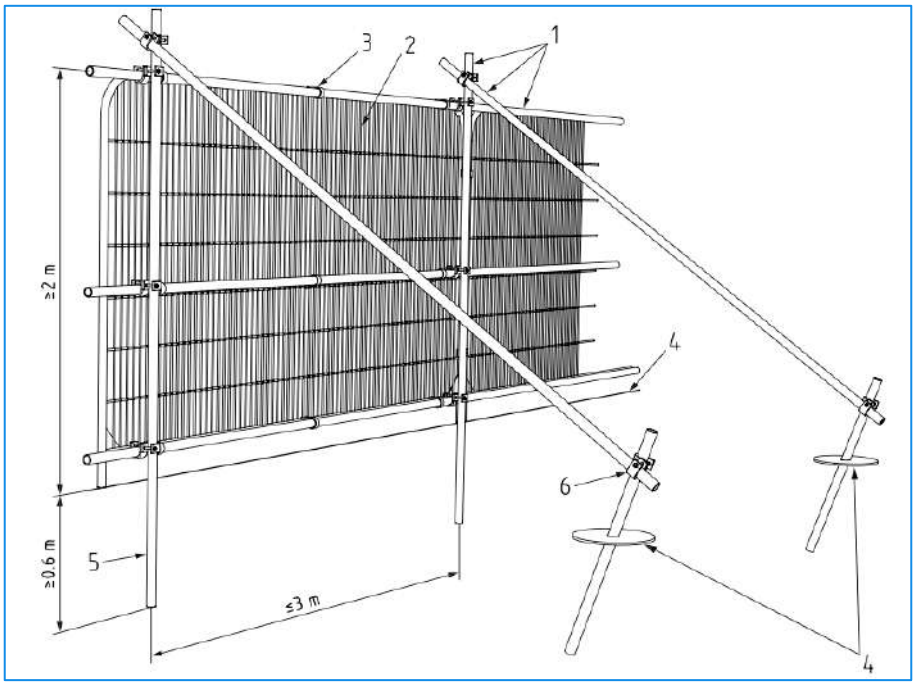

TPF1: Default specification for protective barrier (Fig 2 from BS5837:2012)

1 Standard scaffold poles

2 Heavy gauge 2 m tall galvanised tube and welded mesh infill panels

3 panels secured to up rights and cross members with wire-ties

4 ground level

5 uprights driven into the ground until secure (minimum depth 0.6 m)

6 Standard scaffold clamps

TPF 2: Alternative fencing option: scaffold uprights with backstay

TPF 3:Alternative fencing option: on boots with backstay

TPF 4: Plastic barrier for low intensity areas of construction

TPF 5: Chain-link for low intensity areas on large projects

ii. Tree Categories Explained

BS5837:2012 Table 1 -**Cascade chart for tree quality assessment**			
Category and definition	**Criteria (including subcategories where appropriate)**		
Trees unsuitable for retention (see Note)			
Category U Those in such a condition that they cannot realistically be retained as living trees in the context of the current land use for longer than 10 years	*Trees that have a serious, irremediable, structural defect, such that their early loss is expected due to collapse, including those that will become unviable after removal of other category U trees (e.g. where, for whatever reason, the loss of companion shelter cannot be mitigated by pruning) *Trees that are dead or are showing signs of significant, immediate, and irreversible overall decline *Trees infected with pathogens of significance to the health and/or safety of other trees nearby, or very low quality trees suppressing adjacent trees of better quality *NOTE Category U trees can have existing or potential conservation value which it might be desirable to preserve; see **4.5.7.***		
	1 Mainly arboricultural qualities	**2 Mainly landscape qualities**	**3 Mainly cultural values, including conservation**
Trees to be considered for retention			
Category A **Trees of high quality** with an estimated remaining life expectancy of at least 40 years	Trees that are particularly good examples of their species, especially if rare or unusual; or those that are essential components of groups or formal or semi-formal arboricultural features (e.g. the dominant and/or principal trees within an avenue)	Trees, groups or woodlands of particular visual importance as arboricultural and/or landscape features	Trees, groups or woodlands of significant conservation, historical, commemorative or other value (e.g. veteran trees or wood-pasture)
Category B **Trees of moderate quality** with an estimated remaining life expectancy of at least 20 years	Trees that might be included in category A, but are downgraded because of impaired condition (e.g. presence of significant though remediable defects, including unsympathetic past management and storm damage), such that they are unlikely to be suitable for retention for beyond 40 years; or trees lacking the special quality necessary to merit the category A designation	Trees present in numbers, usually growing as groups or woodlands, such that they attract a higher collective rating than they might as individuals; or trees occurring as collectives but situated so as to make little visual contribution to the wider locality	Trees with material conservation or other cultural value
Category C **Trees of low quality** with an estimated remaining life expectancy of at least 10 years, or young trees with a stem diameter below 150mm	Unremarkable trees of very limited merit or such impaired condition that they do not qualify in higher categories	Trees present in groups or woodlands, but without this conferring on them significantly greater collective landscape value; and/or trees offering low or only temporary/transient landscape benefits	Trees with no material conservation or other cultural value

iii. Protection Plan

Intentionally blank

BS5837 Tree Survey Schedule

Surveyed Trees / Groups

Ref	Species	Common Name	Height	Stem Diameter	Canopy NESW	Crown Clearance	Age Class	Observations	Est. Remaining Contribution	Date Surveyed	No.	BS Cat
01	Corylus avellana	Hazel	7m	400#mm	3.5 N 3.5 E 3.5 S 3.5 W	1.5m	Mature	Typical coppice form. Off-site and inaccessible- dimensions estimated.	10 Years	20/7/2022	1	C1
02	Ilex aquifolium	Common Holly	9m	200mm	1.5 N 1.5 E 1.5 S 1.5 W	1m	Mature	Narrow crown.	10 Years	20/7/2022	1	C1
03	Acer platanoides	Norway Maple	9m	200#mm	3 N 3 E 3 S 3 W	2.5m	Early-Mature	Fair overall physiological and structural condition.Off-site and inaccessible- dimensions estimated. Poor location close to building.	10 Years	20/7/2022	1	C1
04	Acer pseudoplatanus	Sycamore	17m	600#mm	6 N 6 E 6 S 6 W	2m	Mature	Good overall physiological and structural condition.Off-site and inaccessible- dimensions estimated.	40 Years	20/7/2022	1	A1
05	Prunus avium	Wild Cherry	9m	400#mm	5 N 5 E 5 S 5 W	3m	Mature	Off site and inaccessible. Diameter estimated. Decay and split in upper crown.	10 Years	20/7/2022	1	C1
06	Acer pseudoplatanus	Sycamore	17m	700#mm	6 N 6 E 6 S 6 W	2m	Mature	Good overall physiological and structural condition.Off-site and inaccessible- dimensions estimated.	40 Years	20/7/2022	1	A1
07	Malus sp.	Apple	4.5m	200#mm	3 N 3 E 3 S 3 W	1.5m	Mature	Small domestic fruit tree	10 Years	20/7/2022	1	C1
10	Cupressocyparis leylandii X	Leyland Cypress	2m	100#mm			Mature	Off site formal hedge	10 Years	20/7/2022	1	C2
11	Mixed species	Mixed species	2m	100#mm			Mature	Hedge comprising laurel, cypress and privet.	10 Years	20/7/2022	1	C1
12	Mixed species	Mixed species	3m	100#mm			Mature	Hedge comprising laurel and yew.	10 Years	20/7/2022	1	C1
13	Mixed species	Mixed species	2m	100#mm			Mature	Hedge comprising laurel and privet.	10 Years	20/7/2022	1	C1
											Total :11	

Survey by Mark Welby DipArb(RFS), TechCert(ArborA), FArborA
Arboricultural Association Registered Consultant
www.mwelby.com

# denotes estimated dimension. Typically due to the tree being inaccessible.
Where dimensions are not listed please refer to the plan graphics for an indicatvie representation (typically for groups).

Trees / Groups for Removal

Trees / Groups to be removed				
Ref	Species	Common Name	Category	No.
02	Ilex aquifolium	Common Holly	C1	1
07	Malus sp.	Apple	C1	1
11	Mixed species	Mixed species	C1	1
				Total :3

NOTES

This Tree Survey has been undertaken within the recommendations of British Standards 5837:2012 and current arboricultural best practice.

- The reference numbers of surveyed trees and groups of trees are shown. Stem locations within groups may be estimated, and indicative of canopy only
- The tree survey was carried out from ground level only, with the aid of binoculars as necessary, following the Visual Tree Assessment (VTA) method.
- Where trees are located on neighbouring land an estimated appraisal has been made of their quality and dimensions.
- Where stems or branches are obscured by ivy or other materials a full assessment of those parts will not be possible.
- Height dimensions are estimated and are given in metres.
- Trunk/stem diameters are measured in mm at 1.5 metres above ground level, unless otherwise stated. Where this is not possible, then Figure C.1 of the British Standard is followed..
- Tree canopies, where markedly asymmetrical, were measured (or estimated by pacing) in four directions using a laser measure. Symmetrical canopies are measured in one direction only, with dimensions in the remaining directions assumed to be similar. For the canopies of groups of trees, the maximum radius for each compass point is measured (more complicated groups will have further notes taken and an accurate representation will be shown on the plan).

Base plan/site survey reference: 3806 - 201 Site Plan.dwg

Statutory Tree Protection
Tree Protection Orders: none found with online LPA search

Conservation Area: NO

Felling licence: Garden areas are exempt.

Construction Exclusion Zone

It is the responsibility of everyone engaged in the construction process to respect the tree protection measures and observe the necessary precautions within and adjacent to them.

Inside the exclusion zone, the following shall apply:
- No mechanical excavation whatsoever;
- No excavation by any other means without arboricultural site supervision;
- No hand digging without a written method statement having first been approved by the project arboriculturist;
- No lowering of levels for any purpose (except removal of grass sward using hand tools);
- No storage of plant or materials;
- No storage or handling of any chemical including cement washings;
- No vehicular access;
- No fire lighting.

In addition to the above, further precautions are necessary adjacent to trees:
- No substances injurious to tree health, including fuels, oil, bitumen, cement (including cement washings), builder's sand, concrete mixing and other chemicals shall be stored or used within or directly adjacent to the protection area of retained trees;
- No fire shall be lit such that flames come within 5m of tree foliage.

All weather signs shall be erected at reasonable intervals on the barriers. See example inset

0 5 10m

Key

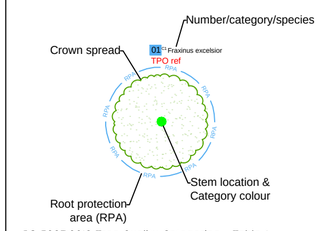

BS 5837:2012 Tree Quality Categories - Table 1

- Category A - High quality
- Category B - Moderate quality
- Category C - Low quality
- Category U - Unsuitable for retention

Key

- CEZ — Construction Exclusion Zone (CEZ)
- CEZ extent. To be protected with temporary protective barriers or ground protection to allow construction access. See insets and method statement for details.
- Tree to be removed

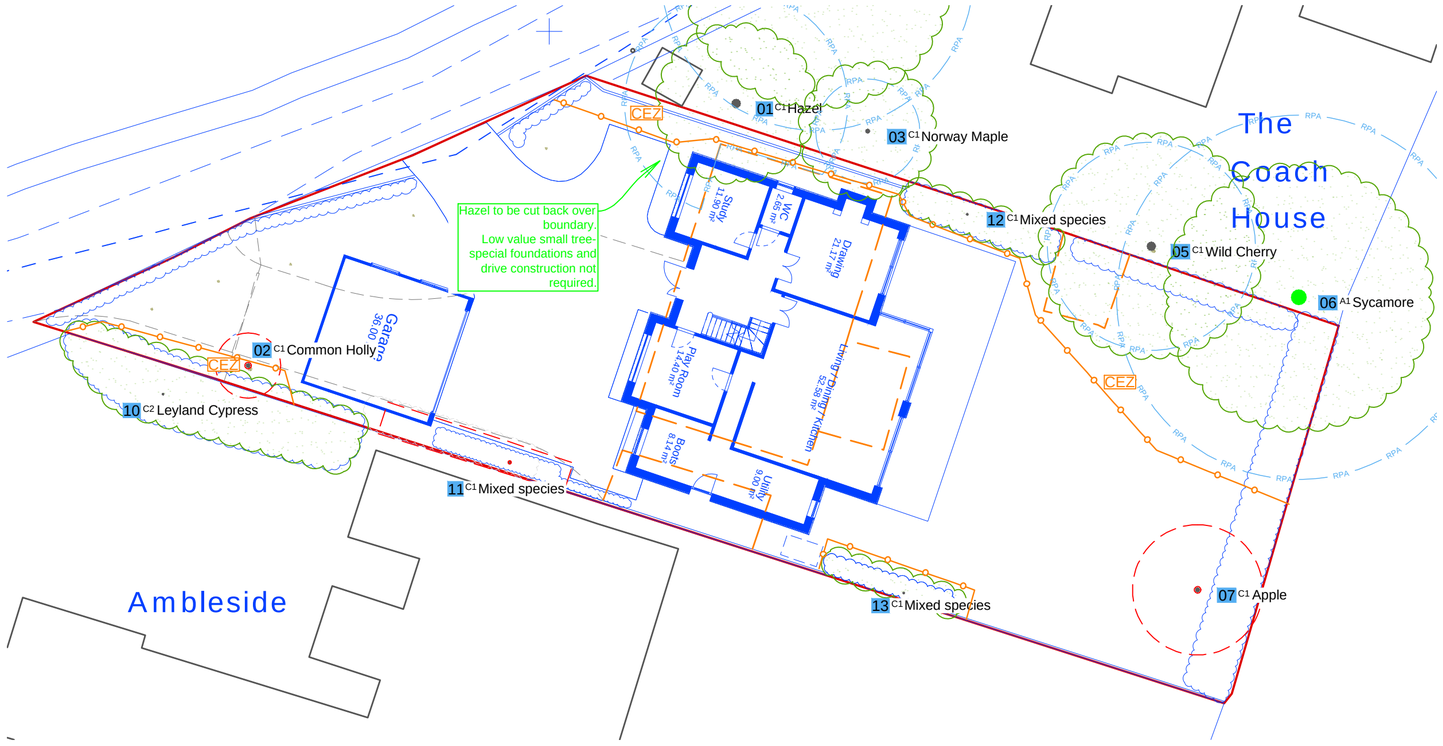

Default specification for protective barrier

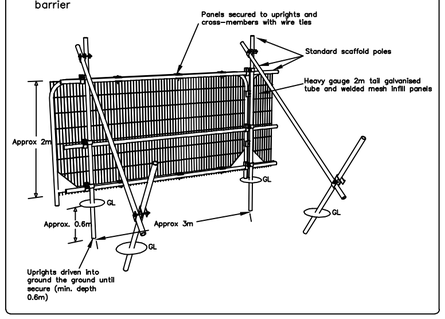

Ground Protection

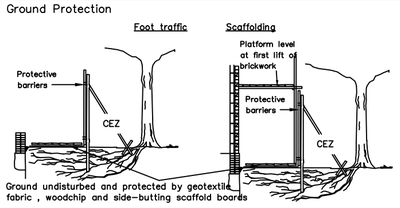

For pedestrian movements only, a single thickness of scaffold boards should be placed either on top of a driven scaffold frame, so as to form a suspended walkway, or on top of a compression-resistant layer (e.g. 100 mm depth of woodchip), laid onto a geotextile.

For pedestrian operated plant up to a gross weight of 2 t, proprietary, inter-linked ground protection boards should be placed on top of a compression-resistant layer (e.g. 150 mm depth of woodchip), laid onto a geotextile.

For wheeled or tracked construction traffic exceeding 2 t gross weight, an alternative system (e.g. pre-cast reinforced concrete slabs) should be employed to an engineering specification designed in conjunction with arboricultural advice to accommodate the likely loading to which it will be subjected.

TREE PROTECTION AREA
KEEP OUT!
(TOWN & COUNTRY PLANNING ACT 1990)
TREES ENCLOSED BY THIS FENCE ARE PROTECTED BY PLANNING CONDITIONS AND/OR ARE THE SUBJECT OF A TREE PRESERVATION ORDER. CONTRAVENTION OF A TREE PRESERVATION ORDER, MAY LEAD TO CRIMINAL PROSECUTION
THIS FENCING MUST NOT BE REMOVED WITHOUT PERMISSION FROM THE LOCAL PLANNING AUTHORITY

This plan has been drafted in colour. A monochrome version must not be relied upon

Date	Notes	Rev
10/06/25	Tree removed	A

Tree Protection

Meadow View
Blagrave Lane, Caversham,
Reading, RG4 7DX

Date: 03/04/2025
Scale: 1:200 @A2

DWG Ref: TPP.MVBL.2207.RevA

MARK WELBY CONSULTING ARBORISTS
Mark Welby
DipArb(RFS), TechCert(ArborA), FArborA
Arboricultural Association Registered Consultant
01730 239 492 | mark@mwelby.com
www.mwelby.com
M Welby Ltd. | Hampshire | UK