TECHNICAL NOTE

Job Name: Station Hill, Temporary Car Park

Job No: 332611381

Note No: TN001 Rev P12

Date: March 2025

Prepared By: Said Bangura / James Scobie

Subject: **Proposed Surface Water Drainage and Maintenance Strategy**

1. Introduction

1.1. This technical note describes the surface water drainage strategy for a proposed temporary car park located on the Station Hill development, Reading. This car park will be constructed and used in the temporary situation prior to the construction of Phase 3 of the development.

1.2. Planning permission for the Station Hill Development has been approved and details of the surface water drainage are contained within the Waterman Flood Risk Assessment (Doc Ref: WIE14788-100-R-14-3-1_FRA). The proposed drainage strategy for this temporary car park has been designed to replicate the approved drainage strategy for the final scheme.

2. Approved Station Hill Drainage Strategy

2.1. Phase 3 of the Station Hill development is split between buildings AB, C and D. The approved drainage design for the Station Hill development is for surface water to be attenuated through on-site SuDS to a controlled discharge rate to the 1 in 100 year +40% allowance for climate change event. Surface water from Buildings A (17.8l/s) and C (5l/s) is attenuated to a combined restricted rate of 22.8l/s which outfalls into the Thames Water surface water sewer in Station Road via manhole 281F. Surface water from building B/D is attenuated to a restricted rate of 15.7l/s which outfalls to the Thames Water surface water sewer in Garrard Street via manhole 3655.

3. Discharge Destination

3.1. BGS mapping indicates that the site is underlaid by Chalk Formation bedrock and Alluvium superficial deposits. Geotechnical investigations carried out as part of the Waterman Flood Risk Assessment for the Station Hill Development identified a high groundwater level on the site. The brownfield nature of the site also poses a risk to mobilising contaminates that may already be present in the ground. As a result, and in line with the original planning consent, it is assumed that infiltration of surface water to ground is not feasible for the development.

3.2. There are no watercourses within the vicinity of the site, therefore discharge to a watercourse is discounted as a method of surface water discharge.

3.3. As a result, the proposed surface water drainage strategy is to discharge surface water to the surrounding Thames Water surface water drainage network. This follows the strategy identified for the Station Hill development as a whole.

4. Proposed Surface Water Drainage Strategy

4.1. The temporary car park development proposed discharge rate is based on the rate approved in the Waterman Flood Risk Assessment for the overall Station Hill development. As the proposed temporary car park does not cover the entire Phase 3 site, the discharge rate has been calculated based on the proportion of each building that the car park covers as shown in Tables 1 and 2.

Building	Percentage of building covered by car park
Building A	4%
Building B/D	73%
Building C and runoff from G.F podium	95%

Table 1 : Percentages of buildings covered by the proposed car park

Phase 3 building and discharge rate	Impermeable Area (ha)	Discharge rate (100 year +40%CC
Discharging north upstream of Thames Water MH 281F		
Approved Station Hill Phase 3 (Building A - 4%, Building C and runoff from G.F podium - 95%)	0.420	5.5 l/s
Proposed Temporary Car Park	0.338	1.5 l/s
Discharging south to Thames Water MH 3655		
Approved Station Hill Phase 3 (Building B/D – 73%)	0.147	11.4 l/s
Proposed Temporary Car Park	0.133	1.3 l/s
Total		
Approved Station Hill Phase 3	**0.567**	16.9 l/s
Proposed Temporary Car Park	**0.471**	2.8 l/s

Table 2 : Discharge rate and impermeable area comparison

4.2. As shown in the above table for the 1 in 100 +40% climate change event surface water discharge from the site will be limited to 1.5 l/s upstream of Thames Water manhole 281F and 1.3 l/s to Thames Water manhole 3655. The proposed temporary car park drainage is therefore split into a northern and a southern network. These rates and the impermeable area discharging to the Thames Water drainage network are shown to be lower than those of the drainage strategy consented for the Station Hill Phase 3 development.

4.3. The temporary car park will be surfaced with a permeable asphalt with a permeable subbase beneath. The permeable subbase will be wrapped in an impermeable liner. Surface water will permeate through the surface into a permeable subbase with a 30% void ratio which will act as a store to attenuate the water. Water from the subbase will be collected through a perforated pipe network which in turn will pass through flow control manholes which will control the discharge to the rates noted in Table 2. Surface water will then be discharged to the surrounding Thames Water network.

4.4. The network will be sized to contain the 1 in 30 year return period event without flooding in accordance with Design and Construction Guidance for foul and surface water sewers.

4.5. The 1 in 100 year event with a +40% allowance for climate change will generally be contained within the car park sub base layer (within the 30% voids). A small volume of flooding may be permitted on the car park surface, this, will be contained by kerbing within the eastern and western edges of the car park. The disabled parking bays are outside of this flood extent.

4.6. As a result, during the 1 in 100 year +40% climate change all flooding is contained to the site with no surface water flooding into adjacent land.

4.7. Attached with this technical note are the proposed drainage drawings and the supporting MicroDrainage calculations.

4.8. The scheme incorporates SuDS in the form of permeable surfacing which is considered an efficient means of managing surface water runoff close to source. The geomembrane and subsurface layers provide filtration benefits.

4.9. The ACO channel at the base of the ramp into the adjacent Phase 2 car park is at too low a level to connect into the main car park drainage. A single soakaway manhole has been incorporated into the drainage design to collect surface water falling onto this ramp which covers a small area. The soakaway has been located 5m away from the existing building and outside of the permeable asphalt so as not to interfere with the storage. This soakaway does not change the drainage strategy submitted at planning.

4.10. After the temporary car park is no longer in use, Phase 3 of the Station Hill Development will be built in its location as per the planning application.

5. Containing Runoff

5.1. The general topography of the site slopes from north to south towards Garrard Street. To prevent surface water from running off the site a HB2 kerb is proposed along the southern edge of the site to contain runoff so that it infiltrates through the proposed permeable asphalt and into the sub-base.

5.2. Adjacent to the east of the temporary car park, the underground car park which forms part of the Phase 2 Station Hill site is lower than the level of the proposed temporary car park. As a result there is a risk of surface water leaving the temporary car park and flooding the underground car park. To protect against this HB2 kerbs with a linear channel are proposed to capture surface water.

5.3. A linear channel is also proposed along the base of the ramp leading down to the underground car park to capture runoff and prevent it leaving the site.

6. Allowances for Existing Drainage

6.1. Xafinity House building adjacent to the west of the site does not form part of the development and is assumed to remain. A small section of the existing Xafinity House car park will become part of the proposed temporary car park.

6.2. An underground services survey carried out in October 2018 by Plowman Craven identified the surface water drainage for Xafinity House. This identifies that the building and surrounding car park drains to the Thames Water surface water sewer in Greyfriars Road.

6.3. The small section of the existing Xafinity House car park which will become part of the proposed temporary car park has gullies and drains which lead into the Xafinity House surface water drainage network. These gullies and drains will be removed as part of the proposed development and as a result the impermeable area associated with this network will be slightly reduced.

6.4. Other than this small existing section of car park described above, the surface water drainage associated with Xafinity House will not be affected by the proposed development and will continue to operate as it currently does.

6.5. An existing Thames Water 1100 x 750 sewer flows from west to east across the site with an additional 150Ø sewer entering from Garrard Street to the south. Thames Water asset records indicate 2 manholes within the site boundary. The proposed development will not affect these sewers, however it will be necessary for the manhole covers to be adjusted to suit the level of the proposed car park.

7. Maintenance Strategy

7.1. This section sets out the inspection and maintenance requirements for the long-term management of the surface water drainage system. A private maintenance company will be responsible for carrying out the maintenance in the timescales described below.

7.2. There are three types of maintenance activities associated with surface water drainage systems. The SuDS Manual, CIRIA C753, defines these as:

- Regular Maintenance – '*basic tasks undertaken on a frequent and predictable schedule, including inspections/monitoring, silt or oil removal if required more frequently than once a year, vegetation management, sweeping of surfaces and litter and debris removal.'*
- Occasional Maintenance – *'tasks that are likely to be required periodically, but on a much less frequent and predictable basis than the regular tasks (eg sediment removal or filter replacement.'*
- Remedial Maintenance – *'intermittent tasks that may be required to rectify faults associated with the system, although the likelihood of faults can be minimised by good design, construction and regular maintenance activities. Where remedial work is found to be necessary, it is likely to be due to site-specific characteristics or unforeseen events, and so timings are difficult to predict.*'

7.3. Specific maintenance needs should be monitored and maintenance schedules adjusted to suit the location and condition of the drainage feature in question.

Operation and Maintenance Activity	SuDS Components				
	Piped Network / Inspection Chambers / Catchpits	Permeable Paving	Granular Soakaway	Linear Drainage Channel / ACO Channel	Flow Control Chamber and HydroBrake
Regular Maintenance					
Inspection	■	■	■	■	■
Litter and debris removal	■	■	■	■	■
Weed and invasive plant control		□			
Occasional Maintenance					
Sediment management[1]	■	■	■	■	■
Vacuum sweeping and brushing		■			
Remedial Maintenance					
Structure rehabilitation / repair	□	□	□	□	□
■ Will be required □ May be required [1] Sediment should be collected and managed in pre-treatment systems, upstream of the main device					

Table 3: Extract Table 32.1 Typical Key SuDS Components operation and Maintenance Activities, The SuDS Manual C753, CIRIA 2015

Permeable surfacing

7.4. Permeable surfacing is a form of surface construction which allows rainwater to permeate though the surface and into the underlying construction layers, where it is stored prior to infiltration into the ground or discharge into a wider drainage network. As water travels through the construction layers hydrocarbons and other organic materials are trapped and degraded by micro-organisms providing a water quality benefit.

Maintenance Schedule	Required Action	Typical Frequency
Regular Maintenance	Brushing and vacuuming (standard cosmetic sweep over whole surface)	Once a year, after autumn leaf fall, or reduced frequency as required, based on site-specific observations of clogging or manufacturer's recommendations - pay particular attention to areas where water runs onto pervious surface from adjacent impermeable areas as this area is most likely to collect the most sediment
Occasional Maintenance	Stabilise and mow contributing and adjacent areas	As required
	Removal of weeds or management using glyphospate applied directly into the weeds by an applicator rather than spraying	As required - once per year on less frequently used pavements
	Remediate any landscaping which, through vegetation maintenance or soil slip, has been raised to within 50 mm of the level of the paving	As required
	Remedial work to any depressions, rutting and cracked or broken blocks considered detrimental to the structural performance or a hazard to users, and replace lost jointing material	As required
Remedial Maintenance	Rehabilitation of surface and upper substructure by remedial sweeping	Every 10 to 15 years or as required (if infiltration performance is reduced due to significant clogging)
Monitoring	Initial inspection	Monthly for three months after installation
	Inspect for evidence of poor operation and/or weed growth - if required, take remedial action	Three-monthly, 48 h after large storms in first six months
	Inspect silt accumulation rates and establish appropriate brushing frequencies	Annually
	Monitor inspection chambers	Annually

Table 4: Permeable Surfacing operation and maintenance

Piped Network / Inspection Chambers

7.5. Piped network components require regular inspection and maintenance to ensure that the individual components continue to operate as designed, both in terms of hydraulic capacity and potential pollutant removal. All the gullies, inspection chambers, flow controls, penstocks and catchpits will therefore be inspected and cleaned regularly.

Maintenance Schedule	Required Action	Typical Frequency
Regular Maintenance	Inspect and identify any features that are not operating correctly. If required take remedial action	Monthly for three months, then six monthly
	Debris removal from catchment surface / gratings (where may cause risks to performance)	Monthly (and after large storms)
	Remove sediment from trapped sumps, manholes and catchpits.	Annually or as required
Remedial Maintenance	Repair / rehabilitation of gratings, inlets and outlets	As required
Monitoring	Inspect / check all gratings, trapped sumps, manholes and catchpits to ensure that they are in good condition and operating as designed	Annually and after large storm events
Structure Rehabilitation / Repair	Regular Maintenance and Monitoring to identify if repair and / or replacement of features or pipework is required.	As required

Table 5: Piped Network / Inspection Chambers operation and maintenance

Granular Soakaway

7.6. A Granular soakaway is willed with granular material which has voids to temporarily store surface water. The soakaway is surrounded by a geotextile wrap that allows water to pass through and soak into the ground. This form of soakaway is used for draining small areas.

Maintenance Schedule	Required Action	Typical Frequency
Regular Maintenance	Remove sediment and debris from incoming connection	Annually (or as required)
Remedial Actions	Reconstruct soakaway or replace filter material, if performance deteriorates or failure occurs.	As required
	Replacement of clogged geotextile (may require reconstruction of soakaway).	As required
Monitoring	Inspect and note rate of sediment accumulation.	Monthly in the first year and then annually
	Check soakaway to ensure emptying is occurring.	Annually

Table 6: Granular Soakaway operation and maintenance

Linear Drainage Channels / ACO Channels

7.7. A Linear Drainage Channel is shallow and laid at the surface which captures rainwater runoff. The channels are fitted with either gratings or slots which allows water to enter the channel. Surface water outfalls via a piped connection into the wider surface water drainage network.

Maintenance Schedule	Required Action	Typical Frequency
Regular Maintenance	Debris removal from gratings / slot (where may cause risks to performance)	Monthly (and after large storms)
	Remove sediment from channel and sumps.	Annually or as required
Remedial Actions	Replace grating or slot if damaged.	As required
Monitoring	Inspect and note rate of sediment accumulation in channel.	Monthly in the first year and then annually
	Check channel is emptying properly.	Annually

Table 7: Linear Drainage Channels / ACO Channels operation and maintenance

Flow Control Chamber and HydroBrake

7.8. A flow control chamber is a manhole where the rate of water leaving the manhole is controlled to a reduced rate. The water leaving the manhole is controlled by a vortex flow control (such as a Hydrobrake).

Maintenance Schedule	Required Action	Typical Frequency
Regular Maintenance	Inspect flow control inlets for blockage and clear as required.	Monthly (and after large storms)
	Remove sediment from manhole sump.	Monthly over the first three months to determine rate of sediment build-up, then annually going forward.
Remedial Maintenance	Repair or replacement of flow control as required	As required
Monitoring	Review depth of water in flow control chamber	After large storms

Table 8: Flow Control Chamber and HydroBrake operation and maintenance

8. Timescale for Implementation

8.1. The construction of this temporary car park is planned to commence in January 2025 at the time of writing.

DOCUMENT ISSUE RECORD

Technical Note No	Rev	Date	Prepared	Checked	Reviewed (Discipline Lead)	Approved (Project Director)
332611381/2001/TN001	P01	28.03.2024	STB	JPS	JPS/PJG	SE
332611381/2001/TN001	P02	10.04.2024	STB	JPS	JPS/PJG	SE
332611381/2001/TN001	P03	24.04.2024	STB	JPS	JPS/PJG	SE
332611381/2001/TN001	P04	08.05.2024	STB	JPS	JPS/PJG	SE
332611381/2001/TN001	P05	02.08.2024	STB	JPS	JPS/PJG	SE
332611381/2001/TN001	P06	09.09.2024	STB	JPS	JPS/PJG	SE
332611381/2001/TN001	P07	11.12.2024	STB	JPS	JPS/PJG	SE
332611381/2001/TN001	P08	05.02.2025	STB	JPS	JPS/PJG	SE
332611381/2001/TN001	P09	06.02.2025	STB	JPS	JPS/PJG	SE
332611381/2001/TN001	P10	10.02.2025	STB	JPS	JPS/PJG	SE
332611381/2001/TN001	P11	20.02.2025	STB	JPS	JPS/PJG	SE
332611381/2001/TN001	P12	18.03.2025	STB	JPS	JPS/PJG	SE

This report has been prepared by Stantec UK Limited ('Stantec') on behalf of its client to whom this report is addressed ('Client') in connection with the project described in this report and takes into account the Client's particular instructions and requirements. This report was prepared in accordance with the professional services appointment under which Stantec was appointed by its Client. This report is not intended for and should

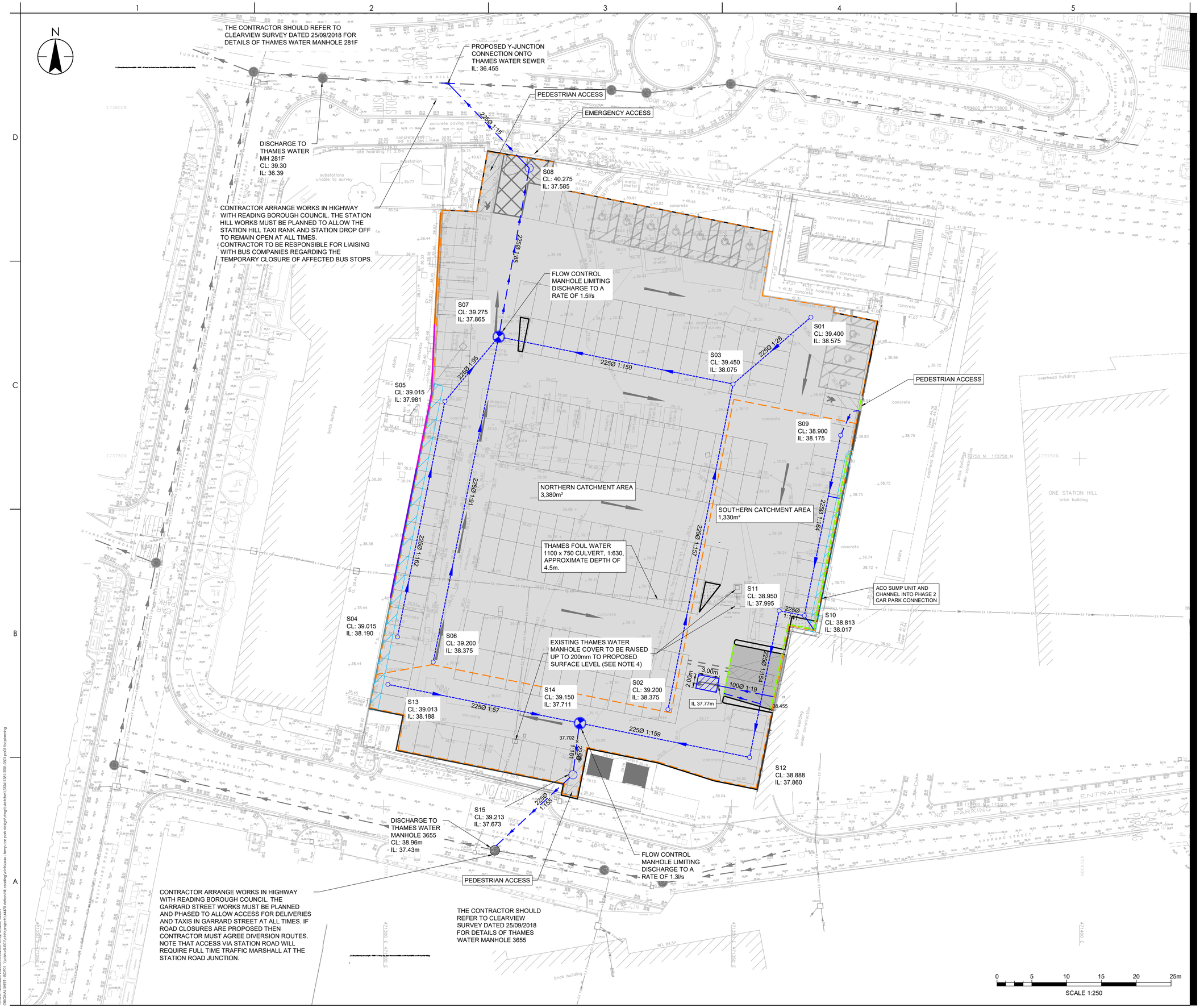

Stantec

Stantec UK Limited
Caversham Bridge House, Waterman Place
Reading
RG1 8DN
Tel. +44 1189 500 761
www.stantec.com/uk

Copyright Reserved

The Contractor shall verify and be responsible for all dimensions. DO NOT scale the drawing. Any errors or omissions shall be reported to Stantec without delay.
The Copyrights to all designs and drawings are the property of Stantec. Reproduction or use for any purpose other than that authorised by Stantec is forbidden.

Notes

UTILITIES NOTE: The position of any existing public or private sewers, utility services, plant or apparatus shown on this drawing is believed to be correct, but no warranty to this is expressed or implied. Other such plant or apparatus may also be present but not shown. The Contractor is therefore advised to undertake their own investigation where the presence of any existing sewers, services, plant or apparatus may affect their operations.

1. DO NOT SCALE THIS DRAWING. IF IN DOUBT PLEASE REQUEST FURTHER INFORMATION.
2. ALL DIMENSIONS ARE IN METRES UNLESS STATED OTHERWISE.
3. THIS DRAWING IS TO BE READ IN CONJUNCTION WITH ALL OTHER RELEVANT CONTRACT DRAWINGS, CONSTRUCTION DETAILS AND SPECIFICATIONS.
4. CONTRACTOR TO INSPECT THAMES WATER MANHOLES WHICH REQUIRE COVER RAISING AND REPORT DETAILS TO DESIGNER.

KEY:

- CATCHMENT BOUNDARY
- THAMES WATER SURFACE WATER SEWER AND MANHOLE
- EX FW — THAMES WATER FOUL WATER SEWER
- PROPOSED SURFACE WATER DRAINAGE PIPE
- PROPOSED INSPECTION CHAMBER/ MANHOLE
- PROPOSED FLOW CONTROL MANHOLE
- PROPOSED SOAKAWAY MANHOLE 1200Ø
- PROPOSED PERFORATED DRAIN
- PROPOSED SOAKAWAY TRENCH
- PROPOSED M100D 10 ACO CHANNEL DRAIN
- FLOODING CONTROLLED ONSITE FOR 1 IN 100 YEAR + 40% CLIMATE CHANGE EVENT
- PROPOSED PERMEABLE SURFACING (REFER TO DRAWING 332611381-2001-1102 FOR DETAILS)
- PROPOSED IMPERMEABLE SURFACING (REFER TO DRAWING 332611381-2001-1102 FOR DETAILS)

Issued/Revision	By	Appd	YYYY.MM.DD
PA02 LANDSCAPING ADDED	JR	JPS	2025.03.18
PA01 BOUNDARY AMENDED	JR	SE	2025.02.20

	Dwn.	Dsgn.	Chkd.	YYYY.MM.DD
	STB	JPS	JPS	2025.02.20

Issue Status

FOR PLANNING

This document is suitable only for the purpose noted above.
Use of this document for any other purpose is not permitted.

Client/Project Logo

Lincoln

Client/Project

SH READING MASTER LLP

STATION HILL, READING

PHASE 3, TEMPORARY CAR PARK

Title

PROPOSED DRAINAGE LAYOUT

Project No.	A1 Scale
332611381	1:250

Revision	Drawing No.
PA02	332611381-2001-0501

Plotted: 18.03.2025 2:03:03, 1:8.5222:5 PM By: Scottie. Jones
DRAWING SHEET: ISO2A1 \\12dfs.com\data\projects\332611381\station hill, reading\cad\xrefs - temp car park design\dwgs\sketches\332611381-2001-0501 cp01 for planning

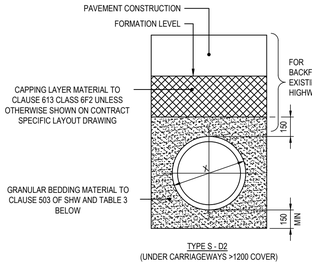

TYPE S - D2
(UNDER CARRIAGEWAYS >1200 COVER)

PIPE BEDDING NOTES

1. DO NOT SCALE THIS DRAWING.
2. ALL DIMENSIONS ARE IN MILLIMETRES UNLESS SHOWN OTHERWISE.
3. WIDTH OF TRENCHES SHALL BE X+600 (MAX) OR X+300 (MIN).
4. WIDTH OF DUEL TRENCHES SHALL BE 2X + X/2 +300 EXCEPT WHERE LAYOUT DICTATES A WIDER SPACING TO ACCOMMODATE MANHOLES AND/OR ADOPTING AUTHORITY REQUIREMENTS.
5. ALL PIPES AND CULVERTS SHALL HAVE FLEXIBLE WATERTIGHT JOINTS.

Table 3

Pipe Size (mm)	Pipe Bedding Granular Material (To BS EN 12620)
100 - 150	Size 4/10
225 - 300	Size 4/10, 10/20 or 4/20
375 - 500	Size 10/20 or 4/20
> 600	Size 10/20, 20/40, 4/20 or 4/40

PROPOSED SURFACE WATER DRAINAGE PIPE DETAIL
NOT TO SCALE

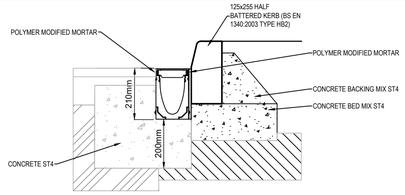

ACO MULTIDRAIN M100D/DS 0.0 CHANNEL ADJACENT TO KERB

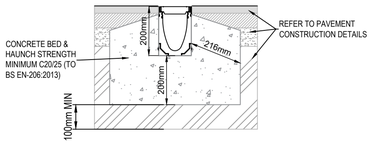

ACO MULTIDRAIN M100D/DS 10.0 CHANNEL

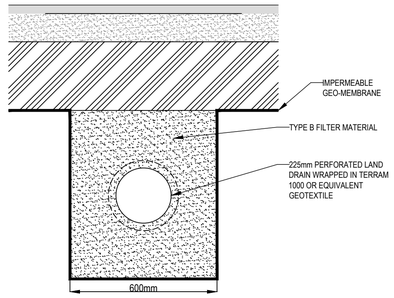

FILTER DRAIN DETAIL

PLASTIC CHAMBERS AND RINGS SHALL COMPLY WITH BS EN 13598-1 AND BS EN 13598-2 OR HAVE EQUIVALENT INDEPENDENT APPROVAL

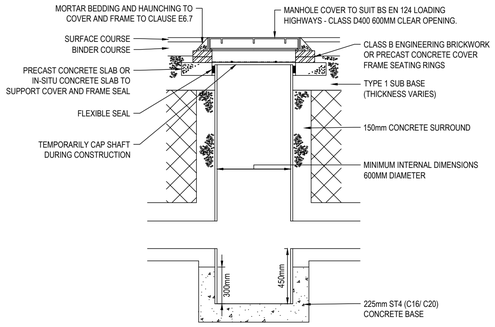

INSPECTION CHAMBER DETAIL (600MMØ MIN)
(FLEXIBLE MATERIAL DETAIL)
MAXIMUM DEPTH FROM COVER LEVEL TO SOFFIT OF PIPE 3m
NOT TO SCALE

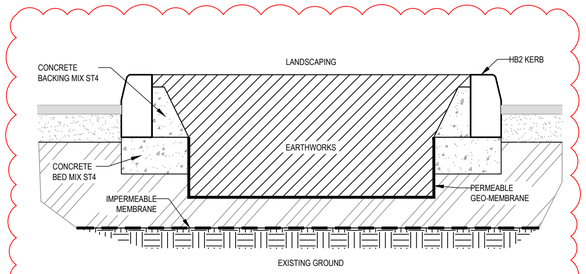

LANDSCAPING ISLAND CONSTRUCTION DETAIL

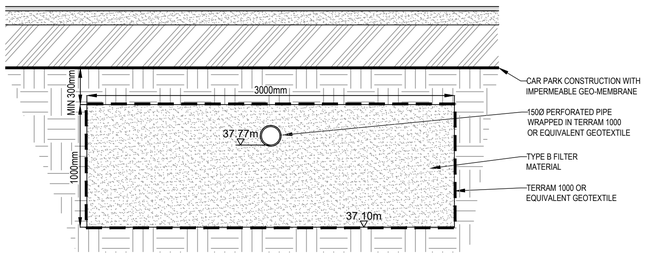

GRANULAR SOAKAWAY

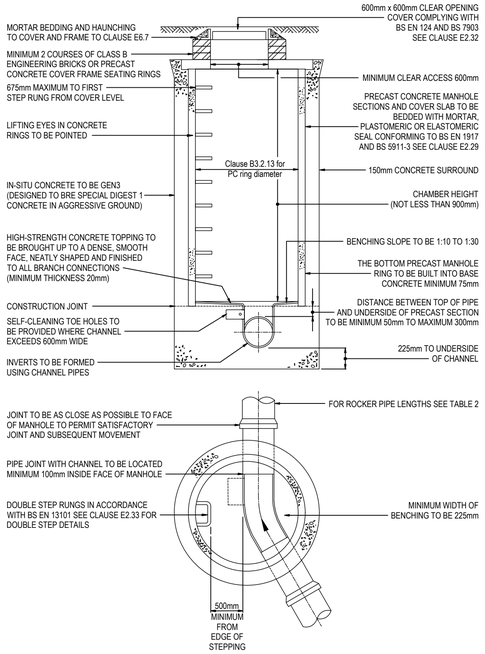

TYPE 2 MANHOLE DETAIL
NOT TO SCALE

MANHOLE AND INSPECTION CHAMBER NOTES

1. CONSTRUCTION SHALL COMPLY WITH THE REQUIREMENTS AND SPECIFICATION OF SEWERS FOR ADOPTION (SFA) 6th EDITION AND THOSE SPECIFIC REQUIREMENTS OF THE ADOPTING STATUTORY UNDERTAKER.
2. TYPE 1A MANHOLE MAXIMUM DEPTH FROM COVER LEVEL TO SOFFIT OF PIPE TO BE 3.0m - 6.0m.
2. TYPE 2 MANHOLE MAXIMUM DEPTH FROM COVER LEVEL TO SOFFIT OF PIPE TO BE 3.0m.
3. TYPE 3 INSPECTION CHAMBER MAXIMUM DEPTH FROM COVER LEVEL TO SOFFIT OF PIPE TO BE 3.0m NON ENTRY.
4. TYPE 4 INSPECTION CHAMBER MAXIMUM DEPTH FROM COVER LEVEL TO SOFFIT OF PIPE TO BE 2.0m NON ENTRY.
5. ALL PIPES TO BE EITHER VITRIFIED CLAY OR CONCRETE AS PER THE SFA SPECIFICATION. ALL JOINTS AND MATERIALS SHALL BE RESISTANT TO CORROSION AND THE PARTICULAR NATURE OF THE CONTAMINANTS FOUND ON THE SITE AS DETAILED IN THE PROJECT GROUND INVESTIGATION.

Table 1

Largest Pipe	Chamber Dia.
< 375	1200
375-450	1350
500-700	1500
750-900	1800
> 900	Pipe Dia. + 900

Table 2

Pipe Dia.	Rocker Length
150 - 600	0.600
601 - 750	1.000
750 +	1.250

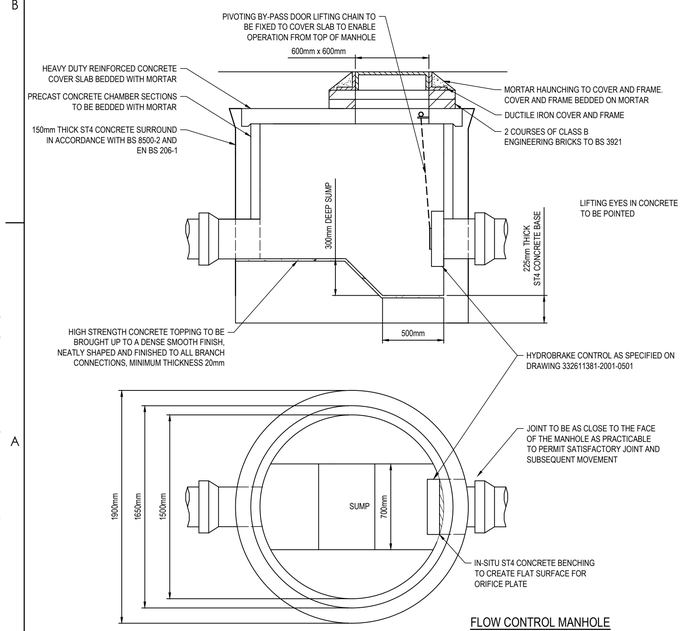

FLOW CONTROL MANHOLE
NOT TO SCALE

MANHOLE AND INSPECTION CHAMBER NOTES

1. CONSTRUCTION SHALL COMPLY WITH THE REQUIREMENTS AND SPECIFICATION OF MCHW AND THOSE SPECIFIC REQUIREMENTS OF THE ADOPTING STATUTORY UNDERTAKER.
2. ALL PIPES TO BE EITHER VITRIFIED CLAY OR CONCRETE AS PER THE MCHW.
3. RISING SPINDLE AND GUIDE BRACKETS TO BE STAINLESS STEEL A131 316L TO BS EN 10088.
4. HYDROBRAKE TO BE INSTALLED IN ACCORDANCE WITH MANUFACTURES INSTRUCTIONS.

Table 1

Pipe Dia.	Rocker Length
150 - 600	0.600
601 - 750	1.000
750 +	1.250

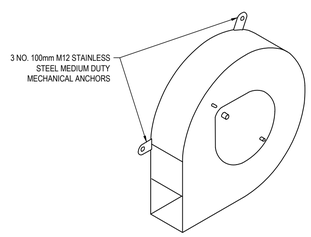

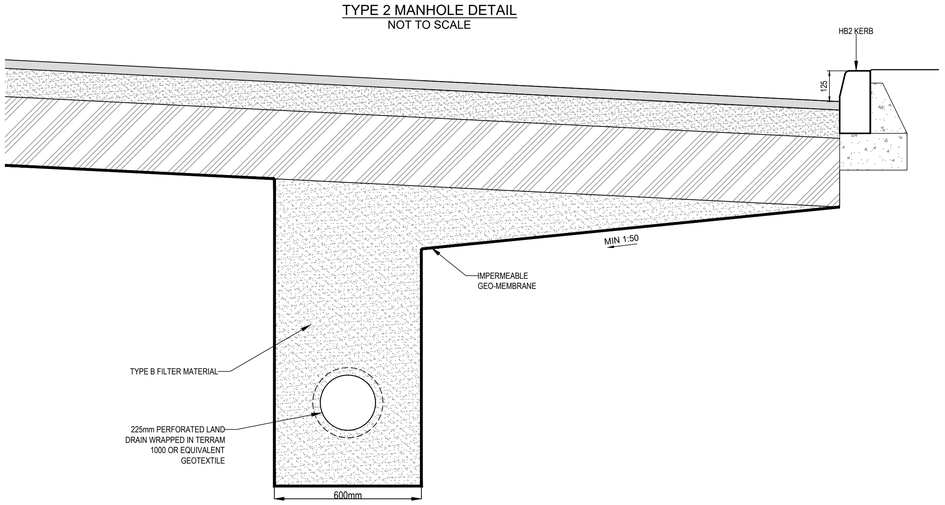

FILTER DRAIN DETAIL

Stantec

Stantec UK Limited
Caversham Bridge House, Waterman Place
Reading
RG1 8DN
Tel. +44 1189 500 761
www.stantec.com/uk

Copyright Reserved

The Contractor shall verify and be responsible for all dimensions. DO NOT scale the drawing. Any errors or omissions shall be reported to Stantec without delay.
The Copyrights to all designs and drawings are the property of Stantec. Reproduction or use for any purpose other than that authorised by Stantec is forbidden.

Notes

UTILITIES NOTE: The position of any existing public or private sewers, utility services, plant or apparatus shown on this drawing is believed to be correct, but no warranty to this is expressed or implied. Other such plant or apparatus may also be present but not shown. The Contractor is therefore advised to undertake their own investigation where the presence of any existing sewers, services, plant or apparatus may affect their operations.

1. DO NOT SCALE THIS DRAWING. IF IN DOUBT PLEASE REQUEST FURTHER INFORMATION.
2. ALL DIMENSIONS ARE IN MILLIMETERS UNLESS STATED OTHERWISE.
3. THIS DRAWING IS TO BE READ IN CONJUNCTION WITH ALL OTHER RELEVANT CONTRACT DRAWINGS, CONSTRUCTION DETAILS AND SPECIFICATIONS.
4. THE DEPTH OF THE SUB-BASE IS BASED ON AN ASSUMED 3% CBR. THE ACTUAL CBR SHOULD BE CONFIRMED BY CONTRACTOR. THE DEPTH OF THE SUB-BASE MAY BE SUBJECT TO CHANGE.
5. REFER TO DRAINAGE PLAN 332611381-2001-0501 FOR DETAILS.

Issued/Revision	By	Appd	YYYY.MM.DD
C03 LANDSCAPING CONSTRUCTION DETAIL ADDED	STB	JPS	2025.03.18
C02 GRANULAR SOAKAWAY ADDED	JR	SE	2025.02.28
C01 CONSTRUCTION ISSUE	STB	SE	2025.01.09

	Dwn.	Dsgn.	Chkd.	YYYY.MM.DD
	STB	JPS	JPS	2025.02.28

Issue Status

FOR CONSTRUCTION

This document is suitable only for the purpose noted above.
Use of this document for any other purpose is not permitted.

Client/Project Logo

Lincoln

Client/Project
SH READING MASTER LLP

STATION HILL, READING

PHASE 3, TEMPORARY CAR PARK

Title
DRAINAGE CONSTRUCTION DETAILS

Project No. 332611381
A1 Scale AS SHOWN
Revision **C03**
Drawing No. **332611381-2001-0502**

Plotted: 18.03.2025 2025.03.18 2:24:43 PM, By: Scoble, James
PlotDrv: DWG - ISO-A1 - \\USAT-N1-MSP01\Projects\HAMS Station Hill, Reading\Civil\xxxx - temp car park design\design\332611381-2001-0502

N

SURFACE WATER MANHOLE SCHEDULE

MANHOLE NAME	COVER LEVEL (m)	MANHOLE DEPTH (m)	MANHOLE EASTING	MANHOLE NORTHING	MANHOLE DIA. (mm)	MANHOLE TYPE	COVER TYPE	INCOMING INVERT (m)	INCOMING DIA. (mm)	OUTGOING INVERT (m)	OUTGOING DIA (mm)	NOTES
S01	39.400	0.825	471361.412	173770.311	600	INSPECTION CHAMBER	D400	-	-	38.575	225	
S02	39.200	0.825	471340.883	173713.988	600	INSPECTION CHAMBER	D400	-	-	38.375	225	
S03	39.450	1.375	471350.236	173760.711	600	INSPECTION CHAMBER	D400	38.075	225	38.075	225	
-	-	-	-	-	-	-	-	38.075	225	-	-	
S04	39.015	0.825	471302.022	173724.395	600	INSPECTION CHAMBER	D400	-	-	38.190	225	
S05	39.015	1.035	471308.844	173758.241	600	INSPECTION CHAMBER	D400	37.980	225	37.980	225	
S06	39.200	0.825	471307.158	173720.788	600	INSPECTION CHAMBER	D400	-	-	38.375	225	
S07	39.275	1.410	471316.573	173767.497	1500	FLOW CONTROL MANHOLE	D400	37.865	225	37.865	225	HYDROBRAKE REF: MD-SHE-0055-1500-1200-1500
-	-	-	-	-	-	-	-	37.865	225	-	-	
-	-	-	-	-	-	-	-	37.865	225	-	-	
S08	40.275	2.690	471320.943	173791.725	1200	TYPE 2 MANHOLE	D400	37.585	225	37.585	225	
S09	38.900	0.725	471365.696	173753.360	600	INSPECTION CHAMBER	D400	-	-	38.175	225	
S10	38.813	0.796	471360.476	173727.443	600	INSPECTION CHAMBER	D400	38.017	225	38.017	225	
S11	38.950	0.955	471356.847	173728.159	600	INSPECTION CHAMBER	D400	37.995	225	37.995	225	
S12	38.888	1.028	471352.604	173707.100	600	INSPECTION CHAMBER	D400	37.860	225	37.860	225	
S13	39.013	0.825	471300.647	173717.576	600	INSPECTION CHAMBER	D400	-	-	38.188	225	
S14	39.150	1.439	471328.245	173712.011	1500	FLOW CONTROL MANHOLE	D400	37.711	225	37.711	225	HYDROBRAKE REF: MD-SHE-0051-1300-1200-1300
-	-	-	-	-	-	-	-	37.711	225	-	-	
S15	39.213	1.540	471327.231	173704.598	1200	TYPE 2 MANHOLE	D400	37.673	225	37.673	225	
SOAKAWAY MANHOLE	38.900	0.480	471350.674	173699.693	1200	SOAKAWAY MANHOLE	B125	37.320	100	38.420	-	

Stantec

Stantec UK Limited
Caversham Bridge House, Waterman Place
Reading
RG1 8DN
Tel. +44 1189 500 761
www.stantec.com/uk

Copyright Reserved

The Contractor shall verify and be responsible for all dimensions. DO NOT scale the drawing. Any errors or omissions shall be reported to Stantec without delay.
The Copyrights to all designs and drawings are the property of Stantec. Reproduction or use for any purpose other than that authorised by Stantec is forbidden.

Notes

UTILITIES NOTE: The position of any existing public or private sewers, utility services, plant or apparatus shown on this drawing is believed to be correct, but no warranty to this is expressed or implied. Other such plant or apparatus may also be present but not shown. The Contractor is therefore advised to undertake their own investigation where the presence of any existing sewers, services, plant or apparatus may affect their operations.

1. DO NOT SCALE THIS DRAWING. IF IN DOUBT PLEASE REQUEST FURTHER INFORMATION.
2. ALL DIMENSIONS ARE IN METRES UNLESS STATED OTHERWISE.
3. THIS DRAWING IS TO BE READ IN CONJUNCTION WITH ALL OTHER RELEVANT CONTRACT DRAWINGS, CONSTRUCTION DETAILS AND SPECIFICATIONS.
4. REFER TO DRAINAGE PLAN 332611381-2001-0501 & 0502 FOR DETAILS.

Issued/Revision	By	Appd	YYYY.MM.DD
C02 MINOR AMENDMENT	JR	SE	2025.02.20
C01 CONSTRUCTION ISSUE	STB	JPS	2025.01.09

	Dwn.	Dsgn.	Chkd.	YYYY.MM.DD
	STB	JPS	JPS	2025.02.20

Issue Status

FOR CONSTRUCTION

This document is suitable only for the purpose noted above.
Use of this document for any other purpose is not permitted.

Client/Project Logo

Lincoln

Client/Project
SH READING MASTER LLP

STATION HILL, READING

PHASE 3, TEMPORARY CAR PARK

Title
PROPOSED MANHOLE SCHEDULE

Project No.
332611381

A1 Scale

Revision
C02

Drawing No.
332611381-2001-503

PlotNet: 20.02.2025,2025.02.20 11:19:09 AM By: Romero, John
CADDATA FILE: 0DA1 A:\Stantec\Projects\US\Buildings\332611381-Station Hill, expanding\CAD\xrefs - temp car park design\Dwgs\332611381-2001-0503

STORM SEWER DESIGN by the Modified Rational Method

Design Criteria for Storm

Pipe Sizes STANDARD Manhole Sizes STANDARD

FSR Rainfall Model - England and Wales

Return Period (years)	2	PIMP (%)	100
M5-60 (mm)	18.900	Add Flow / Climate Change (%)	0
Ratio R	0.400	Minimum Backdrop Height (m)	0.200
Maximum Rainfall (mm/hr)	50	Maximum Backdrop Height (m)	1.500
Maximum Time of Concentration (mins)	30	Min Design Depth for Optimisation (m)	1.200
Foul Sewage (l/s/ha)	0.000	Min Vel for Auto Design only (m/s)	1.00
Volumetric Runoff Coeff.	0.750	Min Slope for Optimisation (1:X)	500

Designed with Level Soffits

Network Design Table for Storm

« - Indicates pipe capacity < flow

PN	Length (m)	Fall (m)	Slope (1:X)	I.Area (ha)	T.E. (mins)	Base Flow (l/s)	k (mm)	HYD SECT	DIA (mm)	Section Type	Auto Design
1.000	19.919	0.500	39.8	0.015	5.00	0.0	0.600	o	225	Pipe/Conduit	
2.000	47.653	0.300	158.8	0.041	5.00	0.0	0.600	o	225	Pipe/Conduit	
1.001	34.365	0.210	163.6	0.092	0.00	0.0	0.600	o	225	Pipe/Conduit	
3.000	34.505	0.210	164.3	0.015	5.00	0.0	0.600	o	225	Pipe/Conduit	
3.001	11.975	0.115	104.1	0.022	0.00	0.0	0.600	o	225	Pipe/Conduit	
4.000	47.647	0.510	93.4	0.041	5.00	0.0	0.600	o	225	Pipe/Conduit	

Network Results Table

PN	Rain (mm/hr)	T.C. (mins)	US/IL (m)	Σ I.Area (ha)	Σ Base Flow (l/s)	Foul (l/s)	Add Flow (l/s)	Vel (m/s)	Cap (l/s)	Flow (l/s)
1.000	50.00	5.16	38.575	0.015	0.0	0.0	0.0	2.08	82.7	2.0
2.000	50.00	5.77	38.375	0.041	0.0	0.0	0.0	1.03	41.1	5.6
1.001	50.00	6.33	38.075	0.148	0.0	0.0	0.0	1.02	40.5	20.0
3.000	50.00	5.57	38.190	0.015	0.0	0.0	0.0	1.02	40.4	2.0
3.001	50.00	5.72	37.980	0.037	0.0	0.0	0.0	1.28	50.9	5.0
4.000	50.00	5.59	38.375	0.041	0.0	0.0	0.0	1.35	53.8	5.6

©1982-2020 Innovyze

Network Design Table for Storm

PN	Length (m)	Fall (m)	Slope (1:X)	I.Area (ha)	T.E. (mins)	Base Flow (l/s)	k (mm)	HYD SECT	DIA (mm)	Section Type	Auto Design
1.002	24.993	0.180	138.9	0.107	0.00	0.0	0.600	o	225	Pipe/Conduit	
1.003	12.623	0.885	14.3	0.000	0.00	0.0	0.600	o	225	Pipe/Conduit	
5.000	26.461	0.158	167.5	0.032	5.00	0.0	0.600	o	225	Pipe/Conduit	
5.001	3.647	0.022	165.8	0.025	0.00	0.0	0.600	o	225	Pipe/Conduit	
5.002	22.569	0.135	167.2	0.000	0.00	0.0	0.600	o	225	Pipe/Conduit	
5.003	24.980	0.149	167.6	0.046	0.00	0.0	0.600	o	225	Pipe/Conduit	
6.000	28.005	0.477	58.7	0.019	5.00	0.0	0.600	o	225	Pipe/Conduit	
5.004	6.409	0.038	168.7	0.029	0.00	0.0	0.600	o	225	Pipe/Conduit	
5.005	14.970	0.089	168.2	0.000	0.00	0.0	0.600	o	225	Pipe/Conduit	

Network Results Table

PN	Rain (mm/hr)	T.C. (mins)	US/IL (m)	Σ I.Area (ha)	Σ Base Flow (l/s)	Foul (l/s)	Add Flow (l/s)	Vel (m/s)	Cap (l/s)	Flow (l/s)
1.002	50.00	6.71	37.865	0.333	0.0	0.0	0.0	1.11	44.0«	45.1
1.003	50.00	6.77	37.685	0.333	0.0	0.0	0.0	3.48	138.5	45.1
5.000	50.00	5.44	38.175	0.032	0.0	0.0	0.0	1.01	40.1	4.3
5.001	50.00	5.50	38.017	0.057	0.0	0.0	0.0	1.01	40.3	7.7
5.002	50.00	5.87	37.995	0.057	0.0	0.0	0.0	1.01	40.1	7.7
5.003	50.00	6.28	37.860	0.103	0.0	0.0	0.0	1.01	40.0	13.9
6.000	50.00	5.27	38.188	0.019	0.0	0.0	0.0	1.71	68.0	2.6
5.004	50.00	6.39	37.711	0.151	0.0	0.0	0.0	1.00	39.9	20.4
5.005	50.00	6.64	37.673	0.151	0.0	0.0	0.0	1.01	40.0	20.4

©1982-2020 Innovyze

Manhole Schedules for Storm

MH Name	MH CL (m)	MH Depth (m)	MH Connection	MH Diam.,L*W (mm)	PN	Pipe Out Invert Level (m)	Diameter (mm)	PN	Pipes In Invert Level (m)	Diameter (mm)	Backdrop (mm)
01	39.400	0.825	Open Manhole	600	1.000	38.575	225				
02	39.200	0.825	Open Manhole	600	2.000	38.375	225				
03	39.450	1.375	Open Manhole	600	1.001	38.075	225	1.000	38.075	225	
								2.000	38.075	225	
04	39.015	0.825	Open Manhole	600	3.000	38.190	225				
05	39.015	1.035	Open Manhole	600	3.001	37.980	225	3.000	37.980	225	
06	39.200	0.825	Open Manhole	600	4.000	38.375	225				
07	39.275	1.410	Open Manhole	1500	1.002	37.865	225	1.001	37.865	225	
								3.001	37.865	225	
								4.000	37.865	225	
08	40.275	2.590	Open Manhole	1200	1.003	37.685	225	1.002	37.685	225	
	39.300	2.500	Open Manhole	0		OUTFALL		1.003	36.800	225	
09	38.900	0.725	Open Manhole	600	5.000	38.175	225				
10	38.813	0.796	Open Manhole	600	5.001	38.017	225	5.000	38.017	225	
11	38.950	0.955	Open Manhole	600	5.002	37.995	225	5.001	37.995	225	
12	38.888	1.028	Open Manhole	600	5.003	37.860	225	5.002	37.860	225	
13	39.013	0.825	Open Manhole	600	6.000	38.188	225				
14	39.338	1.627	Open Manhole	1500	5.004	37.711	225	5.003	37.711	225	
								6.000	37.711	225	
15	39.213	1.540	Open Manhole	600	5.005	37.673	225	5.004	37.673	225	
9	38.960	1.376	Open Manhole	1200		OUTFALL		5.005	37.584	225	

MH Name	Manhole Easting (m)	Manhole Northing (m)	Intersection Easting (m)	Intersection Northing (m)	Manhole Access	Layout (North)
01	471368.244	173769.295	471368.244	173769.295	Required	
02	471340.862	173714.014	471340.862	173714.014	Required	
03	471350.260	173760.731	471350.260	173760.731	Required	
04	471302.037	173724.425	471302.037	173724.425	Required	
05	471308.879	173758.245	471308.879	173758.245	Required	

©1982-2020 Innovyze

Manhole Schedules for Storm

MH Name	Manhole Easting (m)	Manhole Northing (m)	Intersection Easting (m)	Intersection Northing (m)	Manhole Access	Layout (North)
06	471307.109	173720.735	471307.109	173720.735	Required	
07	471316.555	173767.436	471316.555	173767.436	Required	
08	471316.703	173792.428	471316.703	173792.428	Required	
	471311.823	173804.070			No Entry	
09	471365.704	173753.358	471365.704	173753.358	Required	
10	471360.456	173727.423	471360.456	173727.423	Required	
11	471356.880	173728.137	471356.880	173728.137	Required	
12	471352.413	173706.015	471352.413	173706.015	Required	
13	471300.466	173716.446	471300.466	173716.446	Required	
14	471327.931	173710.973	471327.931	173710.973	Required	
15	471327.239	173704.602	471327.239	173704.602	Required	
9	471316.156	173694.539			No Entry	

©1982-2020 Innovyze

PIPELINE SCHEDULES for Storm

Upstream Manhole

PN	Hyd Sect	Diam (mm)	MH Name	C.Level (m)	I.Level (m)	D.Depth (m)	MH Connection	MH DIAM., L*W (mm)
1.000	o	225	01	39.400	38.575	0.600	Open Manhole	600
2.000	o	225	02	39.200	38.375	0.600	Open Manhole	600
1.001	o	225	03	39.450	38.075	1.150	Open Manhole	600
3.000	o	225	04	39.015	38.190	0.600	Open Manhole	600
3.001	o	225	05	39.015	37.980	0.810	Open Manhole	600
4.000	o	225	06	39.200	38.375	0.600	Open Manhole	600
1.002	o	225	07	39.275	37.865	1.185	Open Manhole	1500
1.003	o	225	08	40.275	37.685	2.365	Open Manhole	1200
5.000	o	225	09	38.900	38.175	0.500	Open Manhole	600
5.001	o	225	10	38.813	38.017	0.571	Open Manhole	600
5.002	o	225	11	38.950	37.995	0.730	Open Manhole	600
5.003	o	225	12	38.888	37.860	0.803	Open Manhole	600
6.000	o	225	13	39.013	38.188	0.600	Open Manhole	600

Downstream Manhole

PN	Length (m)	Slope (1:X)	MH Name	C.Level (m)	I.Level (m)	D.Depth (m)	MH Connection	MH DIAM., L*W (mm)
1.000	19.919	39.8	03	39.450	38.075	1.150	Open Manhole	600
2.000	47.653	158.8	03	39.450	38.075	1.150	Open Manhole	600
1.001	34.365	163.6	07	39.275	37.865	1.185	Open Manhole	1500
3.000	34.505	164.3	05	39.015	37.980	0.810	Open Manhole	600
3.001	11.975	104.1	07	39.275	37.865	1.185	Open Manhole	1500
4.000	47.647	93.4	07	39.275	37.865	1.185	Open Manhole	1500
1.002	24.993	138.9	08	40.275	37.685	2.365	Open Manhole	1200
1.003	12.623	14.3		39.300	36.800	2.275	Open Manhole	0
5.000	26.461	167.5	10	38.813	38.017	0.571	Open Manhole	600
5.001	3.647	165.8	11	38.950	37.995	0.730	Open Manhole	600
5.002	22.569	167.2	12	38.888	37.860	0.803	Open Manhole	600
5.003	24.980	167.6	14	39.338	37.711	1.402	Open Manhole	1500
6.000	28.005	58.7	14	39.338	37.711	1.402	Open Manhole	1500

©1982-2020 Innovyze

PIPELINE SCHEDULES for Storm

Upstream Manhole

PN	Hyd Sect	Diam (mm)	MH Name	C.Level (m)	I.Level (m)	D.Depth (m)	MH Connection	MH DIAM., L*W (mm)
5.004	o	225	14	39.338	37.711	1.402	Open Manhole	1500
5.005	o	225	15	39.213	37.673	1.315	Open Manhole	600

Downstream Manhole

PN	Length (m)	Slope (1:X)	MH Name	C.Level (m)	I.Level (m)	D.Depth (m)	MH Connection	MH DIAM., L*W (mm)
5.004	6.409	168.7	15	39.213	37.673	1.315	Open Manhole	600
5.005	14.970	168.2	9	38.960	37.584	1.151	Open Manhole	1200

Simulation Criteria for Storm

Volumetric Runoff Coeff	0.750	Additional Flow - % of Total Flow	0.000
Areal Reduction Factor	1.000	MADD Factor * 10m³/ha Storage	2.000
Hot Start (mins)	0	Inlet Coeffiecient	0.800
Hot Start Level (mm)	0	Flow per Person per Day (l/per/day)	0.000
Manhole Headloss Coeff (Global)	0.500	Run Time (mins)	60
Foul Sewage per hectare (l/s)	0.000	Output Interval (mins)	1

Number of Input Hydrographs	0	Number of Storage Structures	12
Number of Online Controls	2	Number of Time/Area Diagrams	0
Number of Offline Controls	0	Number of Real Time Controls	0

Synthetic Rainfall Details

Rainfall Model	FSR	Profile Type	Summer
Return Period (years)	2	Cv (Summer)	0.750
Region	England and Wales	Cv (Winter)	0.840
M5-60 (mm)	18.900	Storm Duration (mins)	30
Ratio R	0.400		

©1982-2020 Innovyze

Online Controls for Storm

Hydro-Brake® Optimum Manhole: 07, DS/PN: 1.002, Volume (m³): 6.1

Unit Reference	MD-SHE-0055-1500-1200-1500
Design Head (m)	1.200
Design Flow (l/s)	1.5
Flush-Flo™	Calculated
Objective	Minimise upstream storage
Application	Surface
Sump Available	Yes
Diameter (mm)	55
Invert Level (m)	37.865
Minimum Outlet Pipe Diameter (mm)	75
Suggested Manhole Diameter (mm)	1200

Control Points	Head (m)	Flow (l/s)
Design Point (Calculated)	1.200	1.5
Flush-Flo™	0.242	1.2
Kick-Flo®	0.493	1.0
Mean Flow over Head Range	-	1.2

The hydrological calculations have been based on the Head/Discharge relationship for the Hydro-Brake® Optimum as specified. Should another type of control device other than a Hydro-Brake Optimum® be utilised then these storage routing calculations will be invalidated

Depth (m)	Flow (l/s)	Depth (m)	Flow (l/s)	Depth (m)	Flow (l/s)	Depth (m)	Flow (l/s)
0.100	1.1	1.200	1.5	3.000	2.3	7.000	3.4
0.200	1.2	1.400	1.6	3.500	2.4	7.500	3.5
0.300	1.2	1.600	1.7	4.000	2.6	8.000	3.6
0.400	1.2	1.800	1.8	4.500	2.7	8.500	3.7
0.500	1.0	2.000	1.9	5.000	2.9	9.000	3.8
0.600	1.1	2.200	2.0	5.500	3.0	9.500	3.9
0.800	1.2	2.400	2.1	6.000	3.1		
1.000	1.4	2.600	2.1	6.500	3.3		

Hydro-Brake® Optimum Manhole: 14, DS/PN: 5.004, Volume (m³): 4.9

Unit Reference	MD-SHE-0051-1300-1200-1300
Design Head (m)	1.200
Design Flow (l/s)	1.3
Flush-Flo™	Calculated
Objective	Minimise upstream storage
Application	Surface
Sump Available	Yes
Diameter (mm)	51
Invert Level (m)	37.711
Minimum Outlet Pipe Diameter (mm)	75
Suggested Manhole Diameter (mm)	1200

©1982-2020 Innovyze

Hydro-Brake® Optimum Manhole: 14, DS/PN: 5.004, Volume (m³): 4.9

Control Points	Head (m)	Flow (l/s)
Design Point (Calculated)	1.200	1.3
Flush-Flo™	0.227	1.0
Kick-Flo®	0.459	0.8
Mean Flow over Head Range	-	1.0

The hydrological calculations have been based on the Head/Discharge relationship for the Hydro-Brake® Optimum as specified. Should another type of control device other than a Hydro-Brake Optimum® be utilised then these storage routing calculations will be invalidated

Depth (m)	Flow (l/s)	Depth (m)	Flow (l/s)	Depth (m)	Flow (l/s)	Depth (m)	Flow (l/s)
0.100	0.9	1.200	1.3	3.000	2.0	7.000	2.9
0.200	1.0	1.400	1.4	3.500	2.1	7.500	3.0
0.300	1.0	1.600	1.5	4.000	2.2	8.000	3.1
0.400	1.0	1.800	1.6	4.500	2.4	8.500	3.2
0.500	0.9	2.000	1.6	5.000	2.5	9.000	3.3
0.600	1.0	2.200	1.7	5.500	2.6	9.500	3.4
0.800	1.1	2.400	1.8	6.000	2.7		
1.000	1.2	2.600	1.8	6.500	2.8		

©1982-2020 Innovyze

Storage Structures for Storm

Porous Car Park Manhole: 01, DS/PN: 1.000

Infiltration Coefficient Base (m/hr)	0.00000	Width (m)	12.1
Membrane Percolation (mm/hr)	1000	Length (m)	12.1
Max Percolation (l/s)	40.7	Slope (1:X)	30.0
Safety Factor	2.0	Depression Storage (mm)	5
Porosity	0.30	Evaporation (mm/day)	3
Invert Level (m)	38.900	Cap Volume Depth (m)	0.350

Porous Car Park Manhole: 02, DS/PN: 2.000

Infiltration Coefficient Base (m/hr)	0.00000	Width (m)	20.3
Membrane Percolation (mm/hr)	1000	Length (m)	20.3
Max Percolation (l/s)	114.5	Slope (1:X)	100.0
Safety Factor	2.0	Depression Storage (mm)	5
Porosity	0.30	Evaporation (mm/day)	3
Invert Level (m)	38.700	Cap Volume Depth (m)	0.350

Complex Manhole: 03, DS/PN: 1.001

Infiltration Trench

Infiltration Coefficient Base (m/hr)	0.00000	Trench Width (m)	0.6
Infiltration Coefficient Side (m/hr)	0.00000	Trench Length (m)	47.7
Safety Factor	2.0	Slope (1:X)	167.0
Porosity	0.30	Cap Volume Depth (m)	0.000
Invert Level (m)	38.075	Cap Infiltration Depth (m)	0.000

Infiltration Trench

Infiltration Coefficient Base (m/hr)	0.00000	Trench Width (m)	0.6
Infiltration Coefficient Side (m/hr)	0.00000	Trench Length (m)	16.7
Safety Factor	2.0	Slope (1:X)	167.0
Porosity	0.30	Cap Volume Depth (m)	0.000
Invert Level (m)	38.075	Cap Infiltration Depth (m)	0.000

Porous Car Park

Infiltration Coefficient Base (m/hr)	0.00000	Width (m)	20.2
Membrane Percolation (mm/hr)	1000	Length (m)	20.2
Max Percolation (l/s)	113.3	Slope (1:X)	100.0
Safety Factor	2.0	Depression Storage (mm)	5
Porosity	0.30	Evaporation (mm/day)	3
Invert Level (m)	38.700	Cap Volume Depth (m)	0.350

©1982-2020 Innovyze

Porous Car Park

Infiltration Coefficient Base (m/hr)	0.00000	Width (m)	22.5
Membrane Percolation (mm/hr)	1000	Length (m)	22.5
Max Percolation (l/s)	140.6	Slope (1:X)	30.0
Safety Factor	2.0	Depression Storage (mm)	5
Porosity	0.30	Evaporation (mm/day)	3
Invert Level (m)	38.950	Cap Volume Depth (m)	0.350

Porous Car Park Manhole: 04, DS/PN: 3.000

Infiltration Coefficient Base (m/hr)	0.00000	Width (m)	12.4
Membrane Percolation (mm/hr)	1000	Length (m)	12.4
Max Percolation (l/s)	42.7	Slope (1:X)	25.0
Safety Factor	2.0	Depression Storage (mm)	5
Porosity	0.30	Evaporation (mm/day)	3
Invert Level (m)	38.515	Cap Volume Depth (m)	0.350

Complex Manhole: 05, DS/PN: 3.001

Infiltration Trench

Infiltration Coefficient Base (m/hr)	0.00000	Trench Width (m)	0.6
Infiltration Coefficient Side (m/hr)	0.00000	Trench Length (m)	33.9
Safety Factor	2.0	Slope (1:X)	167.0
Porosity	0.30	Cap Volume Depth (m)	0.000
Invert Level (m)	37.980	Cap Infiltration Depth (m)	0.000

Porous Car Park

Infiltration Coefficient Base (m/hr)	0.00000	Width (m)	14.9
Membrane Percolation (mm/hr)	1000	Length (m)	14.9
Max Percolation (l/s)	61.7	Slope (1:X)	25.0
Safety Factor	2.0	Depression Storage (mm)	5
Porosity	0.30	Evaporation (mm/day)	3
Invert Level (m)	38.515	Cap Volume Depth (m)	0.350

Porous Car Park Manhole: 06, DS/PN: 4.000

Infiltration Coefficient Base (m/hr)	0.00000	Width (m)	20.2
Membrane Percolation (mm/hr)	1000	Length (m)	20.2
Max Percolation (l/s)	113.3	Slope (1:X)	100.0
Safety Factor	2.0	Depression Storage (mm)	5
Porosity	0.30	Evaporation (mm/day)	3
Invert Level (m)	38.700	Cap Volume Depth (m)	0.350

Complex Manhole: 07, DS/PN: 1.002

©1982-2020 Innovyze

Infiltration Trench

Infiltration Coefficient Base (m/hr)	0.00000	Trench Width (m)	0.6
Infiltration Coefficient Side (m/hr)	0.00000	Trench Length (m)	34.3
Safety Factor	2.0	Slope (1:X)	167.0
Porosity	0.30	Cap Volume Depth (m)	0.000
Invert Level (m)	37.865	Cap Infiltration Depth (m)	0.000

Infiltration Trench

Infiltration Coefficient Base (m/hr)	0.00000	Trench Width (m)	0.6
Infiltration Coefficient Side (m/hr)	0.00000	Trench Length (m)	47.6
Safety Factor	2.0	Slope (1:X)	167.0
Porosity	0.30	Cap Volume Depth (m)	0.000
Invert Level (m)	37.865	Cap Infiltration Depth (m)	0.000

Porous Car Park

Infiltration Coefficient Base (m/hr)	0.00000	Width (m)	20.2
Membrane Percolation (mm/hr)	1000	Length (m)	20.2
Max Percolation (l/s)	113.3	Slope (1:X)	100.0
Safety Factor	2.0	Depression Storage (mm)	5
Porosity	0.30	Evaporation (mm/day)	3
Invert Level (m)	38.700	Cap Volume Depth (m)	0.350

Porous Car Park

Infiltration Coefficient Base (m/hr)	0.00000	Width (m)	25.7
Membrane Percolation (mm/hr)	1000	Length (m)	25.7
Max Percolation (l/s)	183.5	Slope (1:X)	30.0
Safety Factor	2.0	Depression Storage (mm)	5
Porosity	0.30	Evaporation (mm/day)	3
Invert Level (m)	38.775	Cap Volume Depth (m)	0.350

Porous Car Park Manhole: 09, DS/PN: 5.000

Infiltration Coefficient Base (m/hr)	0.00000	Width (m)	17.9
Membrane Percolation (mm/hr)	1000	Length (m)	17.9
Max Percolation (l/s)	89.0	Slope (1:X)	25.0
Safety Factor	2.0	Depression Storage (mm)	5
Porosity	0.30	Evaporation (mm/day)	3
Invert Level (m)	38.400	Cap Volume Depth (m)	0.350

Complex Manhole: 10, DS/PN: 5.001

Infiltration Trench

Infiltration Coefficient Base (m/hr)	0.00000	Invert Level (m)	38.017
Infiltration Coefficient Side (m/hr)	0.00000	Trench Width (m)	0.6
Safety Factor	2.0	Trench Length (m)	38.8
Porosity	0.30	Slope (1:X)	167.0

©1982-2020 Innovyze

Infiltration Trench

Cap Volume Depth (m) 0.000 Cap Infiltration Depth (m) 0.000

Porous Car Park

Infiltration Coefficient Base (m/hr)	0.00000	Width (m)	15.7
Membrane Percolation (mm/hr)	1000	Length (m)	15.7
Max Percolation (l/s)	68.5	Slope (1:X)	25.0
Safety Factor	2.0	Depression Storage (mm)	5
Porosity	0.30	Evaporation (mm/day)	3
Invert Level (m)	38.313	Cap Volume Depth (m)	0.350

Complex Manhole: 12, DS/PN: 5.003

Infiltration Trench

Infiltration Coefficient Base (m/hr)	0.00000	Trench Width (m)	0.6
Infiltration Coefficient Side (m/hr)	0.00000	Trench Length (m)	24.8
Safety Factor	2.0	Slope (1:X)	167.0
Porosity	0.30	Cap Volume Depth (m)	0.000
Invert Level (m)	37.860	Cap Infiltration Depth (m)	0.000

Porous Car Park

Infiltration Coefficient Base (m/hr)	0.00000	Width (m)	21.3
Membrane Percolation (mm/hr)	1000	Length (m)	21.3
Max Percolation (l/s)	126.0	Slope (1:X)	25.0
Safety Factor	2.0	Depression Storage (mm)	5
Porosity	0.30	Evaporation (mm/day)	3
Invert Level (m)	38.388	Cap Volume Depth (m)	0.350

Porous Car Park Manhole: 13, DS/PN: 6.000

Infiltration Coefficient Base (m/hr)	0.00000	Width (m)	13.8
Membrane Percolation (mm/hr)	1000	Length (m)	13.8
Max Percolation (l/s)	52.9	Slope (1:X)	25.0
Safety Factor	2.0	Depression Storage (mm)	5
Porosity	0.30	Evaporation (mm/day)	3
Invert Level (m)	38.513	Cap Volume Depth (m)	0.350

Complex Manhole: 14, DS/PN: 5.004

Infiltration Trench

Infiltration Coefficient Base (m/hr)	0.00000	Invert Level (m)	37.711
Infiltration Coefficient Side (m/hr)	0.00000	Trench Width (m)	0.6
Safety Factor	2.0	Trench Length (m)	27.1
Porosity	0.30	Slope (1:X)	59.0

©1982-2020 Innovyze

Infiltration Trench

Cap Volume Depth (m) 0.000 Cap Infiltration Depth (m) 0.000

Infiltration Trench

Infiltration Coefficient Base (m/hr)	0.00000	Trench Width (m)	0.6
Infiltration Coefficient Side (m/hr)	0.00000	Trench Length (m)	38.8
Safety Factor	2.0	Slope (1:X)	167.0
Porosity	0.30	Cap Volume Depth (m)	0.000
Invert Level (m)	37.711	Cap Infiltration Depth (m)	0.000

Porous Car Park

Infiltration Coefficient Base (m/hr)	0.00000	Width (m)	17.1
Membrane Percolation (mm/hr)	1000	Length (m)	17.1
Max Percolation (l/s)	81.2	Slope (1:X)	25.0
Safety Factor	2.0	Depression Storage (mm)	5
Porosity	0.30	Evaporation (mm/day)	3
Invert Level (m)	38.838	Cap Volume Depth (m)	0.350

©1982-2020 Innovyze

1 year Return Period Summary of Critical Results by Maximum Level (Rank 1) for Storm

Simulation Criteria

Areal Reduction Factor 1.000 Additional Flow - % of Total Flow 0.000
Hot Start (mins) 0 MADD Factor * 10m³/ha Storage 2.000
Hot Start Level (mm) 0 Inlet Coeffiecient 0.800
Manhole Headloss Coeff (Global) 0.500 Flow per Person per Day (l/per/day) 0.000
Foul Sewage per hectare (l/s) 0.000

Number of Input Hydrographs 0 Number of Storage Structures 12
Number of Online Controls 2 Number of Time/Area Diagrams 0
Number of Offline Controls 0 Number of Real Time Controls 0

Synthetic Rainfall Details

Rainfall Model FSR Ratio R 0.400
Region England and Wales Cv (Summer) 0.750
M5-60 (mm) 18.900 Cv (Winter) 0.840

Margin for Flood Risk Warning (mm) 300.0
Analysis Timestep 2.5 Second Increment (Extended)
DTS Status OFF
DVD Status ON
Inertia Status ON

Profile(s) Summer and Winter
Duration(s) (mins) 15, 30, 60, 120, 240, 360, 480, 960, 1440
Return Period(s) (years) 1, 30, 100
Climate Change (%) 0, 35, 40

PN	US/MH Name	Storm	Return Period	Climate Change	First (X) Surcharge	First (Y) Flood	First (Z) Overflow	Overflow Act.
1.000	01	30 Winter	1	+0%	30/30 Summer			
2.000	02	480 Winter	1	+0%	30/15 Summer			
1.001	03	480 Winter	1	+0%	1/60 Winter			
3.000	04	480 Winter	1	+0%	1/120 Winter	100/360 Winter		
3.001	05	480 Winter	1	+0%	1/60 Summer	100/360 Winter		
4.000	06	480 Winter	1	+0%	30/15 Summer			
1.002	07	480 Winter	1	+0%	1/30 Summer			
1.003	08	30 Winter	1	+0%				
5.000	09	30 Winter	1	+0%	30/15 Summer			
5.001	10	360 Winter	1	+0%	30/15 Summer	100/240 Winter		
5.002	11	360 Winter	1	+0%	30/15 Summer			
5.003	12	360 Winter	1	+0%	1/120 Winter			
6.000	13	30 Winter	1	+0%	30/15 Summer			
5.004	14	360 Winter	1	+0%	1/30 Winter			
5.005	15	240 Winter	1	+0%				

©1982-2020 Innovyze

1 year Return Period Summary of Critical Results by Maximum Level (Rank 1) for Storm

PN	US/MH Name	Water Level (m)	Surcharged Depth (m)	Flooded Volume (m³)	Flow / Cap.	Overflow (l/s)	Half Drain Time (mins)	Pipe Flow (l/s)	Status
1.000	01	38.598	-0.202	0.000	0.02		4	1.4	OK
2.000	02	38.561	-0.039	0.000	0.02		147	0.7	OK
1.001	03	38.561	0.261	0.000	0.05		235	2.0	SURCHARGED
3.000	04	38.560	0.145	0.000	0.01		108	0.2	SURCHARGED
3.001	05	38.560	0.355	0.000	0.01		310	0.4	SURCHARGED
4.000	06	38.560	-0.040	0.000	0.01		146	0.7	OK
1.002	07	38.560	0.470	0.000	0.03		345	1.2	SURCHARGED
1.003	08	37.696	-0.214	0.000	0.01			1.2	OK
5.000	09	38.215	-0.185	0.000	0.07		8	2.6	OK
5.001	10	38.158	-0.084	0.000	0.04		71	1.2	OK
5.002	11	38.158	-0.062	0.000	0.03			1.1	OK
5.003	12	38.157	0.072	0.000	0.05		121	1.7	SURCHARGED
6.000	13	38.212	-0.201	0.000	0.02		5	1.5	OK
5.004	14	38.156	0.220	0.000	0.03		152	1.0	SURCHARGED
5.005	15	37.698	-0.200	0.000	0.03			1.0	OK

PN	US/MH Name	Level Exceeded
1.000	01	
2.000	02	
1.001	03	
3.000	04	4
3.001	05	4
4.000	06	
1.002	07	
1.003	08	
5.000	09	
5.001	10	3
5.002	11	
5.003	12	
6.000	13	
5.004	14	
5.005	15	

©1982-2020 Innovyze

30 year Return Period Summary of Critical Results by Maximum Level (Rank 1) for Storm

Simulation Criteria

Areal Reduction Factor 1.000 Additional Flow - % of Total Flow 0.000
Hot Start (mins) 0 MADD Factor * 10m³/ha Storage 2.000
Hot Start Level (mm) 0 Inlet Coeffiecient 0.800
Manhole Headloss Coeff (Global) 0.500 Flow per Person per Day (l/per/day) 0.000
Foul Sewage per hectare (l/s) 0.000

Number of Input Hydrographs 0 Number of Storage Structures 12
Number of Online Controls 2 Number of Time/Area Diagrams 0
Number of Offline Controls 0 Number of Real Time Controls 0

Synthetic Rainfall Details

Rainfall Model FSR Ratio R 0.400
Region England and Wales Cv (Summer) 0.750
M5-60 (mm) 18.900 Cv (Winter) 0.840

Margin for Flood Risk Warning (mm) 300.0
Analysis Timestep 2.5 Second Increment (Extended)
DTS Status OFF
DVD Status ON
Inertia Status ON

Profile(s) Summer and Winter
Duration(s) (mins) 15, 30, 60, 120, 240, 360, 480, 960, 1440
Return Period(s) (years) 1, 30, 100
Climate Change (%) 0, 35, 40

WARNING: Half Drain Time has not been calculated as the structure is too full.

PN	US/MH Name	Storm	Return Period	Climate Change	First (X) Surcharge	First (Y) Flood	First (Z) Overflow	Overflow Act.
1.000	01	960 Winter	30	+35%	30/30 Summer			
2.000	02	960 Winter	30	+35%	30/15 Summer			
1.001	03	960 Winter	30	+35%	1/60 Winter			
3.000	04	960 Winter	30	+35%	1/120 Winter	100/360 Winter		
3.001	05	960 Winter	30	+35%	1/60 Summer	100/360 Winter		
4.000	06	960 Winter	30	+35%	30/15 Summer			
1.002	07	960 Winter	30	+35%	1/30 Summer			
1.003	08	960 Winter	30	+35%				
5.000	09	360 Winter	30	+35%	30/15 Summer			
5.001	10	360 Winter	30	+35%	30/15 Summer	100/240 Winter		
5.002	11	360 Winter	30	+35%	30/15 Summer			
5.003	12	360 Winter	30	+35%	1/120 Winter			
6.000	13	360 Winter	30	+35%	30/15 Summer			
5.004	14	360 Winter	30	+35%	1/30 Winter			
5.005	15	360 Winter	30	+35%				

©1982-2020 Innovyze

30 year Return Period Summary of Critical Results by Maximum Level (Rank 1) for Storm

PN	US/MH Name	Water Level (m)	Surcharged Depth (m)	Flooded Volume (m³)	Flow / Cap.	Overflow (l/s)	Half Drain Time (mins)	Pipe Flow (l/s)	Status
1.000	01	38.950	0.150	0.000	0.01		255	0.4	SURCHARGED
2.000	02	38.950	0.350	0.000	0.02		604	0.8	FLOOD RISK
1.001	03	38.950	0.650	0.000	0.05		887	2.0	SURCHARGED
3.000	04	38.949	0.534	0.000	0.01		942	0.2	FLOOD RISK
3.001	05	38.949	0.744	0.000	0.01			0.3	FLOOD RISK
4.000	06	38.948	0.348	0.000	0.02		601	0.8	FLOOD RISK
1.002	07	38.948	0.858	0.000	0.04		987	1.4	SURCHARGED
1.003	08	37.698	-0.212	0.000	0.01			1.4	OK
5.000	09	38.714	0.314	0.000	0.04		233	1.5	FLOOD RISK
5.001	10	38.713	0.471	0.000	0.06		368	1.7	FLOOD RISK
5.002	11	38.713	0.493	0.000	0.05			1.7	FLOOD RISK
5.003	12	38.712	0.627	0.000	0.05		329	1.9	FLOOD RISK
6.000	13	38.710	0.297	0.000	0.02		162	1.1	SURCHARGED
5.004	14	38.710	0.775	0.000	0.04			1.2	SURCHARGED
5.005	15	37.700	-0.198	0.000	0.03			1.2	OK

PN	US/MH Name	Level Exceeded
1.000	01	
2.000	02	
1.001	03	
3.000	04	4
3.001	05	4
4.000	06	
1.002	07	
1.003	08	
5.000	09	
5.001	10	3
5.002	11	
5.003	12	
6.000	13	
5.004	14	
5.005	15	

©1982-2020 Innovyze

100 year Return Period Summary of Critical Results by Maximum Level (Rank 1) for Storm

Simulation Criteria

Areal Reduction Factor 1.000 Additional Flow - % of Total Flow 0.000
Hot Start (mins) 0 MADD Factor * 10m³/ha Storage 2.000
Hot Start Level (mm) 0 Inlet Coeffiecient 0.800
Manhole Headloss Coeff (Global) 0.500 Flow per Person per Day (l/per/day) 0.000
Foul Sewage per hectare (l/s) 0.000

Number of Input Hydrographs 0 Number of Storage Structures 12
Number of Online Controls 2 Number of Time/Area Diagrams 0
Number of Offline Controls 0 Number of Real Time Controls 0

Synthetic Rainfall Details

Rainfall Model FSR Ratio R 0.400
Region England and Wales Cv (Summer) 0.750
M5-60 (mm) 18.900 Cv (Winter) 0.840

Margin for Flood Risk Warning (mm) 300.0
Analysis Timestep 2.5 Second Increment (Extended)
DTS Status OFF
DVD Status ON
Inertia Status ON

Profile(s) Summer and Winter
Duration(s) (mins) 15, 30, 60, 120, 240, 360, 480, 960, 1440
Return Period(s) (years) 1, 30, 100
Climate Change (%) 0, 35, 40

WARNING: Half Drain Time has not been calculated as the structure is too full.

PN	US/MH Name	Storm	Return Period	Climate Change	First (X) Surcharge	First (Y) Flood	First (Z) Overflow	Overflow Act.
1.000	01	480 Winter	100	+40%	30/30 Summer			
2.000	02	480 Winter	100	+40%	30/15 Summer			
1.001	03	480 Winter	100	+40%	1/60 Winter			
3.000	04	960 Winter	100	+40%	1/120 Winter	100/360 Winter		
3.001	05	960 Winter	100	+40%	1/60 Summer	100/360 Winter		
4.000	06	480 Winter	100	+40%	30/15 Summer			
1.002	07	960 Winter	100	+40%	1/30 Summer			
1.003	08	960 Winter	100	+40%				
5.000	09	480 Winter	100	+40%	30/15 Summer			
5.001	10	480 Winter	100	+40%	30/15 Summer	100/240 Winter		
5.002	11	480 Winter	100	+40%	30/15 Summer			
5.003	12	360 Winter	100	+40%	1/120 Winter			
6.000	13	240 Winter	100	+40%	30/15 Summer			
5.004	14	240 Winter	100	+40%	1/30 Winter			
5.005	15	240 Winter	100	+40%				

©1982-2020 Innovyze

100 year Return Period Summary of Critical Results by Maximum Level (Rank 1) for Storm

PN	US/MH Name	Water Level (m)	Surcharged Depth (m)	Flooded Volume (m³)	Flow / Cap.	Overflow (l/s)	Half Drain Time (mins)	Pipe Flow (l/s)	Status
1.000	01	39.027	0.227	0.000	0.01		445	1.0	SURCHARGED
2.000	02	39.028	0.428	0.000	0.04			1.4	FLOOD RISK
1.001	03	39.027	0.727	0.000	0.08			3.2	SURCHARGED
3.000	04	39.023	0.608	7.775	0.02		585	0.9	FLOOD
3.001	05	39.023	0.818	8.293	0.03			1.1	FLOOD
4.000	06	39.025	0.425	0.000	0.03			1.4	FLOOD RISK
1.002	07	39.024	0.934	0.000	0.04			1.5	FLOOD RISK
1.003	08	37.698	-0.212	0.000	0.01			1.5	OK
5.000	09	38.819	0.419	0.000	0.04		424	1.3	FLOOD RISK
5.001	10	38.818	0.576	4.910	0.05		481	1.3	FLOOD
5.002	11	38.818	0.598	0.000	0.03			1.3	FLOOD RISK
5.003	12	38.818	0.733	0.000	0.05			1.8	FLOOD RISK
6.000	13	38.817	0.404	0.000	0.03			1.7	FLOOD RISK
5.004	14	38.817	0.881	0.000	0.04			1.3	SURCHARGED
5.005	15	37.700	-0.198	0.000	0.04			1.3	OK

PN	US/MH Name	Level Exceeded
1.000	01	
2.000	02	
1.001	03	
3.000	04	4
3.001	05	4
4.000	06	
1.002	07	
1.003	08	
5.000	09	
5.001	10	3
5.002	11	
5.003	12	
6.000	13	
5.004	14	
5.005	15	

©1982-2020 Innovyze