T-01883 623211
E: info@blu-electrical.co.uk
W: www.blu-electrical.co.uk

Blu House
1 Lease Road
Warlingham CR6 9LD

Working Drawings / Technical Submittal / Sample Approval

Designated Person for Co-ordinaton of response : Adam Dobson	**Submittal Issued by:** Adam Dobson
Contract Name: Rowe Court	**Issue Date:** 26th September 2024
Contract Number: P0011 RC	**TC Submittal No:** RC 001 Rev 2
Date Approval Required by: 05/10/2024	**Date Approval Received**

Description of Working Drawings / Technical Submittals / Samples

Video Entry and Access Control

Came Entrotec Apex Oled Video Entry System with KMS cloud Access Control

Equipment

1, Apex 2K OLED Digital Video Entry Panel with 12 way illuminated Key pad, braille etched call and cancel buttons & Micro Colour Camera
2, Entrotec Pro Series Vandel resisitant dome Camera
3, KMS pre-programmed SK4 Door Controller
4, Apex V08 Video 160w System
5, KMS Door Reader x 3
6, Vouge Video Entry Panel
7, PTE/EPTE/LED Push to exit button with emergency exit facility with led display **Rev 2**

Sytem Discription

The system includes a Main Entrance Digital Video Entry Panel with additional dome camera to ensure full image of all visitors.
Vouge Video Panesl to all 24 flats to allow picture and audio communication with the visitor and lock release of the main entrance door
KMS Cloud fob reader installed to the main Entry Panel and additional stand Alone Fob Readers to alow the residents access to the main entrance door, Ground Floor lobby, First & 2nd Floor Stairs
The KMS Access control system is managed in the cloud by KMS with pre-programmed fobs and all access usage looged remotly. All fobs can be removed from the system remotley by KMS should the be lost or a change of tenenacy
Exit from all controlled doors is via the puch to exit button which will release the door locking mechanism

All maglocks and or door locks to be confirmed by the Architect

Comments

Designated Person to Co-ordinate Responses

Design Team Co-ordinator	Copied to	Comments

T-01883 623211
E: info@blu-electrical.co.uk
W: www.blu-electrical.co.uk

Blu House
1 Lease Road
Warlingham CR6 9LD

A = APPROVED B = APPROVED WITH COMMENTS, BUT PROCEED C = REJECTED			
Consultant	Approval Status	Signed	Date
	A B C		

Secured by Design

SBD

Police Preferred Specification

APEX OLED PANELS

DOOR ENTRY SOLUTIONS

CAME ENTROTEC

CAME.COM/ENTROTEC

CAME ENTROTEC APEX

OLED DOOR PANELS

OVERVIEW

Designed and built in the UK, Apex is one of the most renowned door panels that is being installed across social, private and mixed tenure housing developments. With its 'Chic' design, robust quality build and customary Secured by Design accreditation, Apex is ideal for low or high rise developments that have multiple apartments and doors or where concierge facilities are required.

This solution will satisfy even the most complex audio, video or mix and match door entry systems. Subject to the specification

Apex will be delivered to the installers, pre-built, pre-programmed with the preferred access control solution integrated into the cabinet. It's straight forward, easy installation process can be accompanied by a free training course if necessary. Customer support is also on hand to aid any need for reassurance.

CAME Entrotec have staff across the UK who will demonstrate, assist to explain the options and benefits of the CAME Entrotec systems. Please get in touch.

PROXIMITY ACCESS CONTROL READER

- Option of Black on Yellow or Blue on White reader
- Raised Key symbol
- Integrated proximity access Control system using CAME Entrotec's own EasiTag solution or client specification of 3rd party Cloud based Access Control e.g. KMS SimpleKey Web.
- Simple resident access management

CAMERA

- High Quality Colour Camera 560tvl
- Superior 145° Wide Viewing Angle
- Low Illumination
- Aluminium Die-cast Waterproof Housing
- Small & Compact

Pressure sensitive buttons

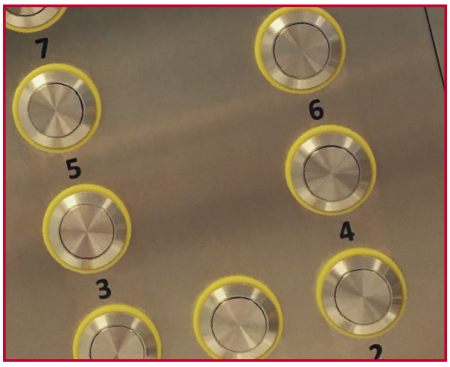

Vandal resistant buttons

KEYPAD BUTTONS

Option of buttons or keypad:
KEYPAD (Front page image)

- Vandal resistant buttons
- Pressure sensitive buttons
- System configuration programming
- 10 pin codes, one of which is timed

ILLUMINATED KEYPAD

- Backlit digital keypad, illuminated rings around buttons
- Stainless steel digital keypad with raised pip on digit 5
- High contrast illuminated numerals
- Intuitive illuminated coloured icons for call & cancel
- 4 x 3 keypad as standard

VANDAL RESISTANT & PRESSURE SENSITIVE BUTTONS

- 0-9 visitor can dial easily around buttons
- Braille characters available
- Stainless steel with contrasting yellow rings
- Diameter 19mm
- Black laser etched characters

PANEL SIZE & FINISHES

Panel size options T17 or T23, marine grade 316L. Standard panel finish is finebrushed aesthetically pleasing & robust quality. Additional hydro dipping panel finishes available. Please note: trades buttons are used on non-Secured by Design projects only.

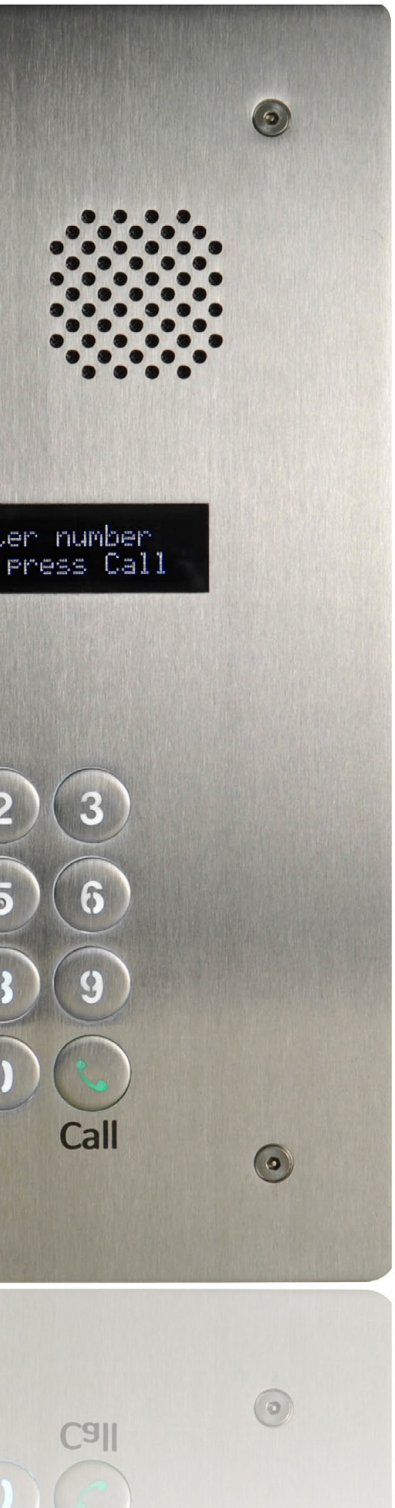

SECURITY FIXINGS

- Robust construction vandal resistant Pin hex M4

MICROPHONE

- Minimises outdoor background noise, providing clear, private two way communication between resident and visitor

SPEAKER

- High quality speaker provides clear audio feedback of system operation.

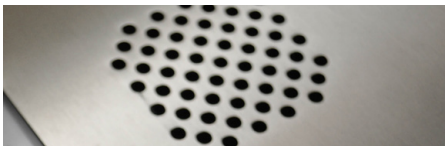

OLED DISPLAY

- Organic Light-Emitting Diode – is a type of display technology that enhances efficiency whilst remaining eco-friendly
- Energy efficient White on Black text
- Displays block name and system and call progress message
- High contrast brightness and sunlight readability
- Integrated Video camera where requested.
- 16 character, 2 rows
- Progress configuration programming

FITTING STYLES

- Overlap, bezelled or surface versions available
- All overlap panels and bezelled back boxes have rounded corners

Bezelled panel shown here.
Main page image shown in overlap

CAME ENTROTEC APEX OLED

KEY FEATURES

- Fully isolated system
- Secured by Design compliant and tested
- Remote lock release connector (SBD requirement)
- Call waiting facility holds a call and automatically connects when the resident is free
- Stainless Steel 2.5mm 316L (Marine Grade) Call Panels
- Multiple speech paths
- Housed in IP66 steel cabinet with key locks
- Controllers supplied in 8,16 and 24 way formats
- Remote marshalling available in 8,16 and 24 way formats
- Use CW1308, Cat 5 cabling or Cat 6
- Over 6000 flats on Apex system
- Over 1000 digital and functional doors/system with configurable access areas
- DC system allowing for battery back-up, DC lock releases and maglocks (fused)
- Full handset isolation and switch adjustable time
- Auto Call features (dials without having to press CALL button)
- Integrated coded access facility (10 codes)
- Anti-tailgating function
- Lock release times individually, adjustable between 1 & 60 seconds
- Multi-block linkable for gated access systems
- Auto GMT/BST timeclock for trades function. Not accepted on SBD projects.
- Modern OLED for block information and instructions
- Equality Act (DDA) features

OPTIONS

- EntroNet Concierge System
- Integrated proximity access control
- Integrated panel camera or separate CCTV camera for video systems
- Full voice over to mimic display
- Accessible features include use of different languages (4x4 keypad required)
- Landing and lift control system
- Hearing loop
- Audio version only
- Audio & Video version with integrated camera
- Alpha-numeric addresses or flat selection by scrolling through a list (scroll select) 4 x 4 keypad
- Braille labelling for call & cancel buttons standard
- Auto dial facility with any button cancellation of call

COMPATIBLE HANDSETS

A range of Door Entry accessories designed to work in conjunction with our Apex Door Entry System.

ED Range

EV+

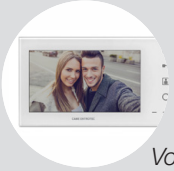

Vogue

ACCESSORIES

A range of Door Entry accessories designed to work in conjunction with our Apex Door Entry System.

- Fire Fighter Switches
- Push to Exit Buttons
- Equality Act 2010 Accessories
- Controller Cabinet Accessories
- Vandal Resistant Dome Camera

CAME ENTROTEC
5 Ashwood Court
Oakbank
Livingston
EH53 0TL

Tel: 01506 886230
Support: 01506 886235

CAME ENTROTEC

© APEXOLED0223 - 2023 - EN
YOU MAY NOT EVEN PARTIALLY REPRODUCE THIS DOCUMENT
THE DATA AND INFORMATION SHOWN IN THIS CATALOGUE ARE SUBJECT TO CHANGE WITHOUT OBLIGATION TO GIVE PRIOR NOTICE BY CAME S.P.A, E&OE

CAME.COM/ENTROTEC

DOME CAMERA (HDCVI)

High Resolution Vandal Resistant Dome Camera With Varifocal Lens and Switchable Outputs

Overview

- 2 Mega-pixel, 1/2.7" CMOS image sensor.
- SD/HD Switchable Output
- Motorised varifocal lens, 2.7 mm–13.5 mm.
- Excellent low light performance.
- Smart IR LED, distance up to 30 Ỳ.
- Outputs Max. 1080P at 30 fps.
- DC12V.
- IP67, IK10 protection.

VARIFOCAL LENS

This camera features a motorised varifocal lens, making it suitable for a wide range of applications and installations. With a wide range field-of-view, the camera can be zoomed in / out to ensure the target area can be adjusted for the best view.

SWITCHABLE OUTPUT

The BNC interface defaults to a standard definition stream, suitable for door entry applications, for example, Apex or Elite systems. The output can also be switched to HDCVI, providing a high-definition stream suitable to be connected to a compatible DVR.

LONG DISTANCE TRANSMISSION

HDCVI technology guarantees real-time transmission at long distance without loss. It supports up to 800m @1080P and 1200m @720P transmission via coaxial cable, and up to 300m @1080P and 450m @720P via UTP cable.

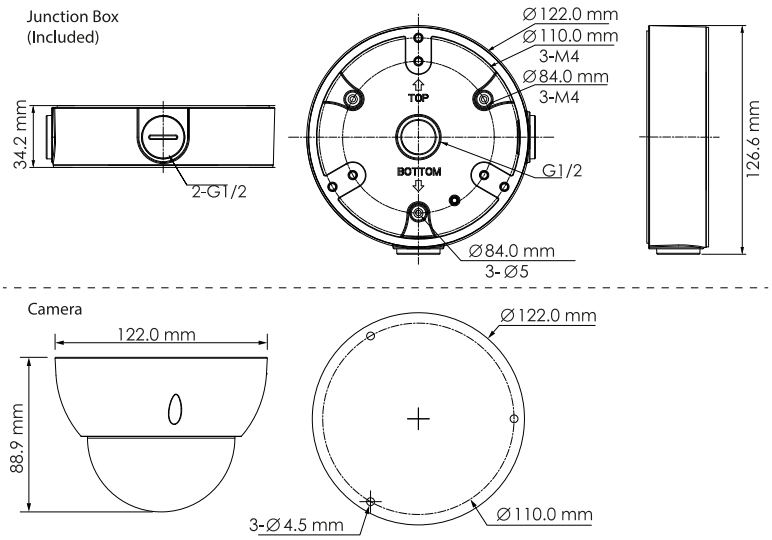

Functions

SMART IR

IR LED array provides excellent lowlight performance. Smart IR technology to ensures brightness uniformity in B/W image under low illumination. Smart IR adjusts the LED intensity to compensate for the distance of an object, and prevents overexposure as the object come closer.

DWDR

Digital Wide Dynamic Range technology provides clear details in the environments with of strong brightness contrast. For example in environments with strong back-light, the camera provides clear detail on darker areas.

PROTECTION

IP67: 'Dust Tight' with no ingress of particles and complete protection against contact. 'All Weather' with protection from powerful water jets and total submersion (up to 1M, 30 mins).

IK10: with robust metal enclosure and vandal resistant design, this product achieves the highest classification of impact resistance.

Technical characteristics

Camera Specification						**Video Specification**	
Image Sensor	1/2.7", 2MP, CMOS, Progressive Scan					Standards	HDCVI, CVBS, PAL
Effective Pixels	1920 (H) × 1080 (V)					Resolutions	2MP - 1080p, 1.3MP - 720p, PAL - 575i
Lens Type	Motorised Varifocal					WDR	DWDR
Focal Length	2.7mm - 13.5mm					Gain Control	Auto / Manual
Max Aperture	F1.8					Video Frame Rate	HDCVI: 1920 x 1080 @ 25/30 fps, 1280 x 720 @ 25/30/50/60 fps, CVBS: 576 TVL.
Field of View	Horizontal: 105.9°~33.4°					Day/Night	Auto (ICR) / Manual
Iris Type	Fixed aperture						
IR Distance	30 M					**Connectivity**	
Min. Illumination	0.02Lux/F1.8					Interface	1x BNC
	Lens	Detect	Observe	Recognise	Identify	Power	DC12V, 6.3W
DORI Distance	W	45 M	18 M	9 M	5 M		
	T	132 M	53 M	26 M	13 M		

© DOME0222 - 2022 - EN

CAME ENTROTEC

LEGACY READERS

LEGACY RESIDENTIAL ACCESS CONTROL

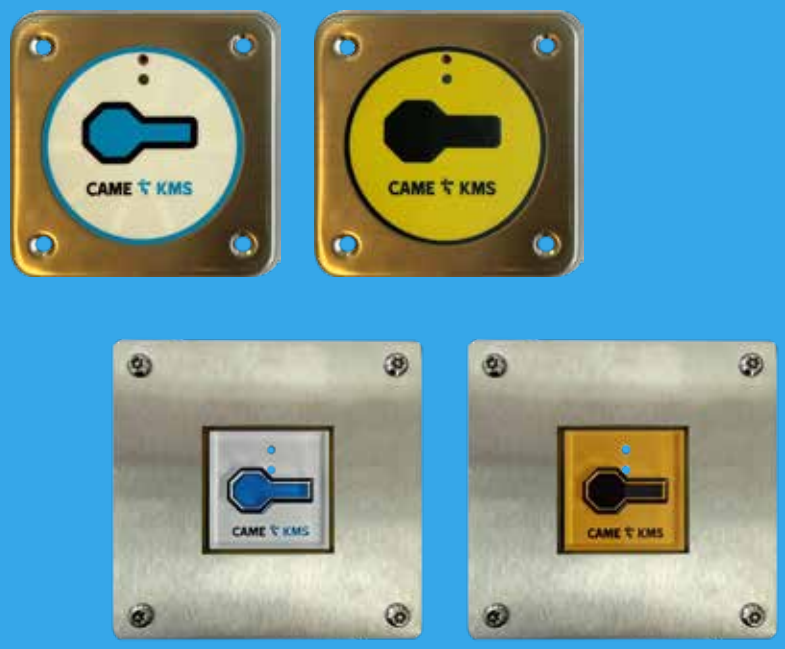

The CAME KMS SimpleKey Legacy readers provide all the benefits of CAME KMS residential access control, for use with legacy fobs and other ID devices..

- **Compatible** with most types of legacy fobs including CAME KMS Sharktooth, PAC, Entrotag etc
- **Panel Mount** reader uses the industry standard 40mm aperture enabling the reader to fit into most new and existing door entry panels.
- **Vandal Resistant** reader employing a robust stainless-steel case and fully potted electronics that can be used in environmentally challenging conditions.
- **Can** be used with both the CAME KMS SimpleKey 3 and SimpleKey 4 systems and also operates with other manufactures access control systems.
- **Dual / tricolour LEDs** indicate the door state, either locked or unlocked, and also when the system voltage drops below 10.5V.
- **Robust** British designed and built readers for UK housing providers and comes with a lifetime guarantee.

INSTALLATION

The **Panel Mount** reader is designed to be mounted within metal panels, no thicker than 2mm with a 40mm square cut-out for the front of the reader to protrude through.

Dimensions: 55mm × 55mm square × 11mm deep.

The **Vandal Resistant** can be fixed to any non-metallic surface using the supplied, vandal resistant screws.

Dimensions: 100mm × 100mm square × 13mm deep.

The **Surface Mount** reader is designed to be fixed directly onto a wall or pedestal.

Dimensions: 100mm × 100mm square × 40mm deep.

Cabling - 6 or 8 core alarm multi strand cable or CW1308 (copper core).

The maximum cable run between the system door controller and the reader is 100 meters.

READLEGDATA0523

CAME KMS
1 Marlborough Trading Estate, West Wycombe Road, High Wycombe, Buckinghamshire HP11 2LB
Tel: 01494 531099 **Email:** ckuk.info@came.com

CAME KMS

SIMPLEKEY 4 SYSTEM CONTROLLER

CONTROLLER FOR SIMPLEKEY PLATFORM

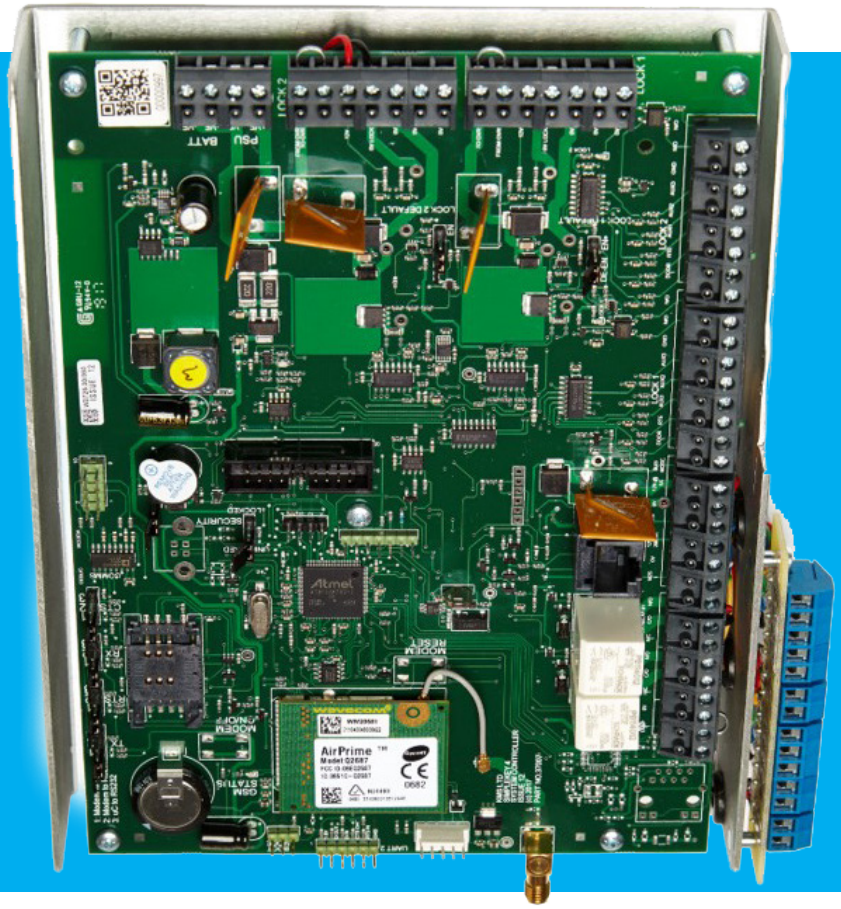

The SimpleKey 4 system controller is the central component of the latest generation of the SimpleKey platform. Incorporating a number of innovative features enabling simpler installation, expansion and management. The SimpleKey 4 system controller has a built in GPRS modem for communications and connections for controlling the first two doors. The system can be easily expanded on a door by door basis using additional SimpleKey 4 extension kits on a free topography wiring bus.

- Control for up to two doors, with lock outputs, door monitoring, emergency overrides and trades button control.
- Multiple system controllers can be connected together and used at one location.
- Real time GPRS communications with built in modem and pre-configured roaming SIM.
- Bus based free topography architecture, utilising standard Cat 5 cabling for connection of additional components.
- Optional detachable programming panel allowing local administration.
- Cloud based management with individual QR code identification enabling simpler set-up and support.

TECHNICAL INFORMATION

Power Connections
- 12–15v input, 500mA (without auxiliary connections)
- Optional battery back-up connection

Lock Outputs
- 2 lock outputs
- N/O or N/C connection
- Optional on-board power connection
- Thermal cut-out protection

Monitoring and Control (2 door)
- RTE connection
- Door monitoring
- Local emergency override
- Global emergency override
- Trades button control
- 2 programmable relay outputs

N.B; the above can be reprogrammed for other functions

Communication
- Single coax connection to high gain aerial

Cabling
- KMS Bus (used to connect the components is Cat 5 or above (open topography)
- Lock – dependent on lock type and specification, (Twin 1mm^2 copper flex up to 1 Amp)

PCB Dimensions
- 210mm × 160mm × 50mm

SKCDATA0521

CAME KMS
1 Marlborough Trading Estate, West Wycombe Road, High Wycombe, Buckinghamshire HP11 2LB
Tel: 01494 531099 **Email:** ckuk.info@came.com

CAME KMS

VOGUE

HANDS FREE VIDEO APARTMENT STATION

CAME ENTROTEC

CAME.COM/ENTROTEC

CAME ENTROTEC VOGUE

HANDS FREE VIDEO APARTMENT STATION

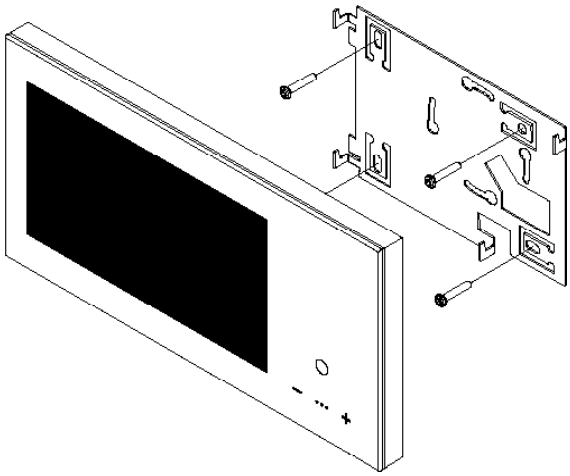

OVERVIEW

The Vogue is a modern, stylish apartment station and is compatible with APEX systems. The Vogue allows an occupant of a dwelling to answer a call from a visitor at a communal entrance and have a hands-free, two-way simultaneous conversation. The video option allows the occupant to see and identify the visitor and their location. They can then enable the remote operation of the electric locking device to permit the visitor access.

The VOGUE has a one-piece glass front and the main body is constructed from a hard wearing ABS plastic which has good mechanical properties; impact resistance. The VOGUE is a 'surface mount' design with a metal wall bracket that can be optionally fitted over a 1 gang electrical back-box.

TECHNICAL DATA

• Display	7" TFT LCD, 800x480
• Buttons	6x Capacitive Touch Sensitive Buttons:
• Door Release	Capacitive Touch, Illuminated
• Privacy	Capacitive Touch, Illuminated
	6 time-out settings (5mins to 12hrs)
	Can also be disabled or set to latch on/off
• Multi-Function	Capacitive Touch: Concierge, Camera Select, etc.
• Call Tone	User Selectable Pulsed Tone with User Volume Adjustment
• Operating Voltage	12-15VDC (13.8V Nominal)
• Power	~0.2W Idle, ~2.7W Active
• Connections	8 Way Screw Terminals
	RJ45 Socket
• Dimensions	(WxHxD) 237 x 121 x 25mm

CAME ENTROTEC
5 Ashwood Court
Oakbank
Livingston
EH53 0TL

Tel: 01506 886230
Support: 01506 886235

CAME ENTROTEC

© VOGUE0222 - 2022 - EN
YOU MAY NOT EVEN PARTIALLY REPRODUCE THIS DOCUMENT
THE DATA AND INFORMATION SHOWN IN THIS CATALOGUE ARE SUBJECT TO CHANGE WITHOUT OBLIGATION TO GIVE PRIOR NOTICE BY CAME S.P.A, E&OE

CAME.COM/ENTROTEC

KMS Simplekey 4 Installation Guide

Version: 1.2.3

Publication Number: 1.02

KMS Publication Date: December 2018

The information contained herein is the confidential and proprietary information of KMS. Unauthorized use of this information and disclosure to third parties is expressly prohibited. This technical publication may not be reproduced in whole or in part, by any means, without the express written consent of KMS.

Copyright © 2018. All rights reserved.

All names and products contained herein are the trademarks or registered trademarks of their respective holders.

Key Management Systems Ltd., 1 Marlborough Trading Estate, West Wycombe Road, High Wycombe, Buckinghamshire, HP11 2LB

Tel: 0330 2230575 Website: www.kms.uk.net Email: technical@kms.uk.net

Table of Contents

Preface 5
About this Publication 5
Customer Support 5
KMS Documentation / Product Enhancements 6
Introduction 7
Description 7
Components 7
How it Works 8
Programming 8
Specification 8
Access Provided 8
Controller Physical Characteristics 8
Communications 9
Operating Parameters 9
Information Required for Setting up a New Block or Area to an Existing Customer Cloud 10
Existing Customers 10
New Builds 11
Site Survey 11
System Commissioning 12
System commissioning includes the following tests: 12
Quick Start 14
Installation 15
The Simplekey 4 System 15
System Controller 16
Connections 16
System Controller Overview 17
Box Tamper 18
Auxiliary relays 1 & 2 18
Communication BUS 18
Lock 1 and Lock 2 Inputs 19
Lock 1 and Lock 2 (Outputs) Maximum 2A supply. 19
PSU 20
Battery 20

Cable Requirements 21
Maximum cable runs 21
KMS BUS 22
Between Cabinet Wiring 23
Loss of BUS Communications. 24
Fail Safe 24
Fail Secure 24
Lock Controller 25
Lock Controller Input Connections 26
Test procedure 26
Lock Controller Output Connections 27
Test procedure 27
Communications BUS Input 28
Reader Interface 29
Reader Connections A & B 30
Communications BUS Input 30
BUS Readers 31
Compatibility 31
Cabling 31
Installation 31
Connection 31
BUS Reader Wiring 32
Locks 33
Modem 33
Basic System Wiring 34
System Wiring Overview 34
System Wiring Example 1 35
System Wiring Example 2 36
Lock Connection 37
Lock Suppression 37
Health and Safety 37
RTE/Door Contact Switch 37
Auxiliary Inputs 37
Direct Connection to the Controller 39
OVR Connections 40
Connection Via a Lock Controller 41
Lock Controller Connections 42

Connection Via the Reader Interface 43
Security / Alarms 44
Power Cut 44
Loss of Data 44
System Controller 44
CATO 45
Introduction 45
Benefits 45
Connecting two Simplekey 4 System Controllers 46
CATO Input / Output Connectors 46
CATO to CATO terminations 46
Connecting a Simplekey 4 System controller to a Simplekey 3 controller 47
CATO to Simplekey 3 terminations 47
SEM 48
Introduction 48
Connections 48
Glossary 49

Preface

This KMS-Simplekey 4 Installation provides all the information required to install a Simplekey 4 system.

About this Publication

This guide lists all the basic aspects of installation, from the system introduction which provides basic information about the Simplekey 4 system (e.g. specifications) to more detailed installation information on each component. All aspects of this manual assume previous experience in the installation of access control equipment, low voltage and extra low voltage systems.

Customer Support

KMS provides support to resolve questions or problems regarding installation, operation, or use of our products. KMS provides all levels of support during normal Business hours (09:00 – 5:00, Monday to Friday). KMS currently do not provide an out of hours service.

You can contact customer support as below:

Email: technical@kms.uk.net
Phone: 0330 2230575

Note: Installation must be wired in accordance with National Wiring Regulations (BS7671, IEE National Wiring Regulations in the UK). Failure to do so can result in injury or death by electric shock. It must also comply with any local Fire, Health and Safety Regulations.

KMS Documentation / Product Enhancements

Submit all product and documentation suggestions to KMS' product management team at technical@kms.uk.net

Include your name, contact details and the name of the KMS product you are using.

For documentation suggestions, include the publication title and number located on the publication's front cover.

Introduction

Description

Simplekey 4 is an extendable residential access control system with each System Controller providing access for up to 10,000 residents through one or more doors (up to 16) using KMS' proximity readers.

Note: Other readers (e.g. Wiegand 26-bit) may be used in conjunction with the KMS Reader Interface.

Components

A Simplekey 4 system comprises:

- A Simplekey 4 System Controller.
- Optional BUS readers.
- Optional Reader Interface.
- Optional Lock Controller.
- Optional CATO board.
- Optional Front Panel.
- Optional Simplekey Event Manager.

It is normally supplied boxed with a power supply, pre-programmed tokens and relevant labelling.

Note: By using the KMS BUS a maximum of 16 doors can be managed. These can be up to 500-metres from the controller if powered locally (at location) or 15 metres if powered directly from the system controller. The 500-metre limit of the KMS BUS is divided between all system components, no single component to extend beyond 100m. Two controllers can be linked together in the cabinet to manage up to 32 doors. This will require additional equipment and system setup. Please contact KMS Technical for further details.

How it Works

Each KMS shark tooth token contains a code unique to the token. The Simplekey 4 System Controller can store up to 10,000 tokens in non-volatile memory. When a token is presented to a reader the token code is compared with those stored in the controller memory. If a match is found then the associated lock is released.

Programming

A Simplekey 4 system comes pre-programmed to meet client requirements with the tokens assigned to areas providing access through the doors specified by the customer at the time of order.

To ensure correct programming the information described in "Information Required for Setting up a New Block / Area to an Existing Customer Cloud" on page 10 is required when the order is placed.

Once the system is up and running it is administered via Simplekey Web.

Some basic programming is possible using the controller if a keypad is attached but this is primarily for maintenance purposes.

The keypad, also called an 'Engineers keypad', is available at a separate cost and is subject to use and restrictions.

Specification

The following tables provide product details.

Access Provided

Doors: Controls up to 16 doors per System Controller.
Tokens: Up to 10,000.

Note: Additional tokens can be assigned via Simplekey Web as required - tenants, contractors, etc.

Controller Physical Characteristics

Dimensions (H x W):	210 x 150mm
Weight:	208g / 7.3oz
Mounting:	Five (3mm) fixing holes.

Note: Upgrade controllers are supplied on a variety of backplates to meet site requirements. Please contact KMS at info@kms.uk.net for more information.

Communications

Communication via Simplekey Web: On-board GPRS modem

Communication interface to additional components (readers etc.): KMS BUS

Memory type: Non-volatile RAM

Baud rate: 115200

Operating Parameters

Input voltage range: 12V ~ 14V DC

Current consumption at 12V DC: Average 160mA, peak 5A, 5A maximum

Lock power: 12V ~ 14V DC; 2A lock (maximum)

Operating temperature: -10°C to 80°C (14°F to 158°F)

Operating humidity: 10% to 85% relative humidity, non-condensing.

Lock relay timer 1 - 255 seconds (default 5 seconds)

Door open timer 0 – 255 seconds (default 0 seconds equals off)

Information Required for Setting up a New Block or Area to an Existing Customer Cloud

Each customer cloud needs to be set up to reflect what is physically on the ground and to suit how the customer manages their operation.

For example, customers may have:

- Set up separate regions (i.e. North, South, etc.) and each new block/area must be positioned in the correct region within the customer cloud.
- Defined 'Estates' with specific blocks associated with them and each block must be positioned within the correct estate.

It is important that the system is constructed correctly for each customer and matches the 'physical' hierarchy used by the customer. This is particularly important as the system grows to ensure ease of operation for the client.

Existing Customers

For existing clients, the following information is required:

- The name of the client (end user customer cloud).
- Details of the block/area to be added - full name and address including post code.
- Details of any existing region / area / estate / block / road etc. to which the new block / area is to be added or confirmation that it is a separate block / area not tied to an existing region etc.
- The equipment required (controllers, readers, etc.) including part numbers.
- Token assignments - flat number, parking bays, door names, etc. as required.
- The sequence in which the doors are to be programmed (Door 1 = MED, Door 2 = RED etc.).
- Access details—who is permitted access to where.
- Any Time Profiles required (e.g. specific times for cleaners, etc.).
- Token colours and quantities for programming for each specific area.
- Token colours and quantities for programming to the customer cloud.
- Any other information that may need to be considered.

New Builds

The same information is required for a new build but they present additional challenges as they tend to be more fluid. When collecting the required information, it should be noted what is confirmed and what may be subject to change. For example, if the block/door names/access/etc. changes then the customer cloud must be updated.

All installations must be commissioned with KMS customer services before they are signed-off and this may be a good time to check details and that the customer cloud accurately reflects the installation. It is important that the integrity of the customer cloud is maintained so that, when the client takes ownership of a new build, the information they see is correct.

Note: Master tokens (access all doors for contractors working on site) for new builds can be set with a reduced time profile, for example these tokens will expire 6 months after activation. This will provide better access control during and after build completion.

Note: KMS are not responsible for programming Master Tokens by default, these are normally administered by the end user.

Site Survey

It is crucial that a site survey is carried out before any installation to determine:

- The GPRS signal and where best to locate the controller to ensure the best communications possible - this will include antenna location and cable routing. Antenna should be located on an external face of the building and several metres above ground level as this may achieve a better signal level whilst deterring vandalism.
- The information needed to program the system - the number of flats, how they're numbered/named, access areas, etc. (see "Information Required for Setting up a New Block / Area to an Existing Customer Cloud" on page 10).
- All aspects of pre-installation including full site survey in relation to cabling, routing and cable distances are the responsibility of the contractor.

System Commissioning

Every system MUST be commissioned with KMS once the installation is complete. Systems must NOT be commissioned before they are fully installed on site, KMS reserve the right to nullify all warranties related to system performance unless all steps are followed.

This is the only way of ensuring the system has been connected correctly to match the initial configuration.

System commissioning includes the following tests:

- Signal strength.
- Signal Bit Error Rate.
- Correct communications between the KMS cloud server and site based GPRS modem.
- Events are being received for each door on the system and events are correct for that door.
- Remotely unlock every door on the system to ensure all locks, readers and outputs work as configured.
- Make system adjustments including lock release time, door open warning times, trades profiles and any re-labelling of doors.

This page is left intentionally blank.

Quick Start

If you have installed a Simplekey 4 system previously the following procedure provides a quick, high-level description of the steps needed to get the system up and running.

Note: If this is the first time you have installed a Simplekey 4 system the steps are described in detail in the subsequent pages.

To set up a Simplekey 4 system:

1. Install the Simplekey 4 controller (complete with power supply).
2. Install readers, cabling and request to exit switches.
3. Install the locks and cabling.
4. Connect any auxiliary inputs.
5. Commission the system with KMS.

Note: It is essential that each component is installed and connected in line with the system configuration agreed with KMS.

Each system is supplied with a full configuration document, connection labels and QR codes providing information as to which door it is to be connected.

Commissioning the system must involve calling KMS and a walk-through to ensure that all aspects of the system are working as expected.

Failure to fully commission a system may result in incorrect operation and reduced functionality. KMS are unable to support any system that has not be commissioned.

Installation

This section describes how to install the Simplekey 4 system. Installation is only to be carried out by competent, qualified and experienced personnel trained by KMS.

Wire in accordance with the country of installation's National Wiring Regulations (UK BS7671, IEE National Wiring Regulations). Failure to do so can result in injury or death by electric shock.

The Simplekey 4 System

The Simplekey 4 system comprises:

- System Controller
- KMS BUS
- Lock Controller
- Reader Interface
- BUS readers
- Locks
- SEM
- CATO

System Controller

The controller is supplied on a backplate for inclusion in a metal cabinet either supplied by us, an OEM or for mounting in an existing cabinet on site. When supplied, the KMS cabinet contains an integrated power supply, typically a 75watt 15V supply is provided and trimmed down to 13.5V at the factory. It should be installed somewhere that is easily accessible.

The metal cabinet KMS provide has a gland situated at the bottom - this must be fitted at the bottom to avoid ingress of water or debris. The gland provides an easy location to run conduit. Two keys are provided with each cabinet.

The controller comes pre-programmed as per customer specification (doors, tokens etc.) and should work 'out of the box' once installed. If additional programming/configuration is required, please contact KMS technical support.

Changes to the original configuration should be made by email and may take up to 72hrs to complete.

When installed the System Controller, on start-up, polls all nodes in the system. Each node gives a single beep on successful poll (subject to system version).

Connections

All connections to the Simplekey 4 controller are made by terminal blocks situated at the left and bottom of the controller.

Note: Always remove power from the controller before removing a terminal block.

System Controller Overview

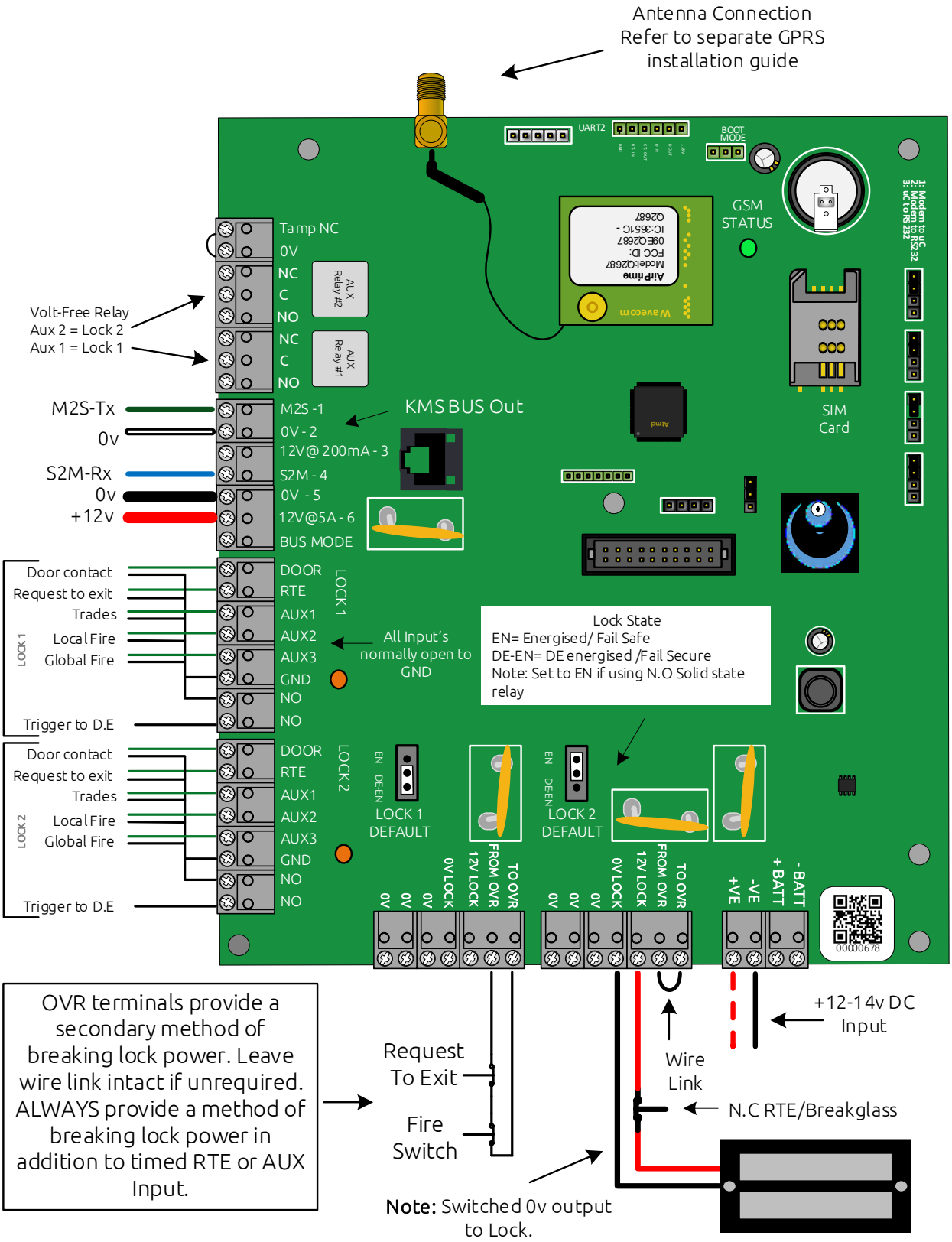

These are the available connections (from top left, anti-clockwise):

Box Tamper

Box Tamp	Box tamper switch terminal 1
0V	Box tamper switch terminal 2 This is normally provided with a metal link loop.

Auxiliary relays 1 & 2

Typically used as secondary lock contacts, configurable outputs can be assigned to other inputs. Maximum 5 Amp capacity.

Aux Relay 2	Normally Closed, Common, Normally Open
Aux Relay 1	Normally Closed, Common, Normally Open

Note: Relay contact state true when controller is powered i.e. relay will switch state when system power is removed.

Communication BUS

M2S	Communication BUS — Master to Slave.
0V	Low current 0V connection up to 200ma output current return.
12V @ 200mA	Low current 12V DC at up to 200ma output current (BUS reader only).
S2M	Communication BUS — Slave to Master.
0V return	High current 0V connection up to 5A output current.
12V @ 5A	High current 12V DC at up to 5A output current.
BUS mode	Communication BUS mode selection input (system reserved).

Lock 1 and Lock 2 Inputs

Note: Inputs normally open, can be inverted to normally closed

Door	Input: Door contact switch to 0V - NC when the door is closed.
RTE	Input: Request to exit switch to 0V.
Aux 1	Input: Switch to 0V (Trade button, always ON unless profile assigned).
Aux 2	Input: Switch to 0V (Local emergency (specific door)).
Aux 3	Input: Switch to 0V (Global emergency (all doors)).
GND	Return for all inputs on this connector.
N/O	Output: Solid state relay contact 1.
N/O	Output: Solid state relay contact 2.

Lock 1 and Lock 2 (Outputs) Maximum 2A supply.

0V	Spare 0V connection.
0V	Spare 0V connection.
0V	Spare 0V connection.
0V to lock	Switched 0V from the lock — energises the lock when switched on.
12V to lock	Constant 12V supply. A load of 50mA or greater is required for a multi-meter to read this accurately.
From OVR	+12V from Emergency lock over-ride switch (usually fitted with metal loop).
To OVR	+12V to Emergency lock over-ride switch.

PSU

+VE	+12V DC from power supply module (up to 5A).
-VE	0V (floating relative to earth).

Battery

+VE	+12V, 7Ah lead acid battery (e.g. Yuasa NP7-12FR).
-VE	0V.

Note: The Simplekey 4 System Controller does not provide a battery charging facility, this terminal is for the connection of a battery only. If battery backup is required a suitable alternative for charging of the battery is required.

Cable Requirements

Cabling requirements are based on a typical installation where all cable runs terminate at the System Controller cabinet. It is extremely important to use high quality cables throughout the installation to ensure consistent and reliable functionality. KMS BUS data cabling must be Cat5, Cat5e or Cat6 with either solid or stranded copper conductors. Cheaper Cat5 cabling using conductors made from Copper Coated Aluminium (CCA) and Copper Coated Steel (CCS) must NOT be used under any circumstances. Incorrect cabling will result in degraded system performance and void all warranties.

It is the installer's responsibility to comply with BS7671 IEE National Wiring Regulations in the UK. Band 1 and Band 2 compliance should be adhered to. Low voltage cabling should be separated from high voltage cabling to reduce the possibility of noise and crosstalk on data transmission lines.

Maximum cable runs

Total KMS BUS 500 metres, includes BUS readers.

Legacy Reader to Reader Interface 50 metres.

KMS BUS	Cat5, Cat5e or Cat6 network cable of known brand and specification. 150ohm per 1000 metres minimum. Due to the large variety of twisted pair data transmission cables manufactured, KMS are unable to recommend or endorse any type.
Reader Interface to Reader	6 or 8 core Alarm multi-stranded cable, CW1308 (Copper core)
Lock Controller to Lock	Twin 1mm² copper flex assuming locks up to 1Amp, installer to calculate for larger loads / longer runs.
RTE to Lock Controller	Alarm cable, CW1308, Cat5
Other General INPUTS	Alarm cable, CW1308, Cat5
High Gain GPRS Antenna	KMS provide Antennas in 5, 10, 15 and 20 metre lengths, all of which must not be cut and re-terminated due to tuning of antenna. Further information later in this guide.

KMS BUS

The KMS BUS carries all communication between system elements — System Controllers, Reader Interfaces and Lock Controllers. From here on in, this manual will refer to these as NODES.

The System Controller is designed to power equipment that is connected within the cabinet locally and is not designed to power remote components. The System Controller can power Reader Interfaces and Lock Controllers if connections do not exceed fifteen metres. Beyond this Distance the NODES need to be powered locally with just the data connections wired between cabinets. KMS have designed the BUS to be 'free topography' meaning the data BUS can be run in either a daisy chain or star wired configuration. A 'loop' or 'ring' topography must be avoided.

Note: For added system integrity KMS highly recommend a star wire configuration. It is the installer's responsibility to ensure secure and proper BUS communication cable runs. Ideally these should be within the fabric of the building.

In cabinet wiring supplied by KMS: (Other OEM supplied builds should be wired using the same cable colour identification and specification.)

M2S	1	1 core - Green 0.2mm^2
0V	2	1 core - White 0.2mm^2
12V	3	Not used
S2M	4	1 core - Blue 0.2mm^2
0V	5	1 core - Black 0.5mm^2
12V	6	1 core - Red 0.5mm^2

Between Cabinet Wiring

The wiring guide below should be used where separate cabinets require the BUS DATA wired. The same applies regardless of the number of cabinets. The use of a 12V DC power supply is required in each separate cabinet to power all the local NODES.

M2S	1	1 core Green 0.2mm^2 - Wire to Green/White of Cat5
0V	2	1 core White 0.2mm^2 -- Wire to White/Green and White/Blue of Cat5
12V	3	Not used
S2M	4	1 core – Blue 0.2mm^2 - Wire to Blue/White of Cat5
0V	5	Not used
12V	6	Not used

Note: All spare cores on BUS cabling should be terminated to ground

Wiring diagrams for transmitting the BUS between cabinets can be found on pages 35 and 36.

Note: If there is a short on the BUS (M2S/S2M goes to ground) then alarms are generated on all nodes - General Alarm for 60 seconds followed by a Reminder Alarm (1 tone) every 5 seconds. Data loss to Lock Controllers will result in automatic lock release, the Lock Controller will flip the lock state i.e. Fail Safe becomes Fail Secure, Fail Secure becomes Fail Safe. All egress buttons MUST be wired to break lock supply.

Loss of BUS Communications.

The Lock Controller can operate in two ways if communications are lost over the BUS, Fail Safe or Fail Secure.

Both operations assume local 12V power remains.

KMS will default the Lock Controller to operate as Fail Safe unless otherwise requested. Requests must be made in writing by the approved installation contractor.

To comply with Secure By Design requirements (SBD) ALL doors must Fail Secure. Egress must always be provided by means of mechanical intervention, i.e. break glass, RTE or auxiliary over-ride switch. See OVR terminations on System Controller and Lock Controller. The access control system must NOT be the only means of egress.

Fail Safe - the Lock Controller will reverse its default lock state, typically dropping the lock output and releasing the door.

Fail Secure - the Lock Controller will retain its default lock state. For example, power to lock devices such as magnets will remain locked.

Lock Controller

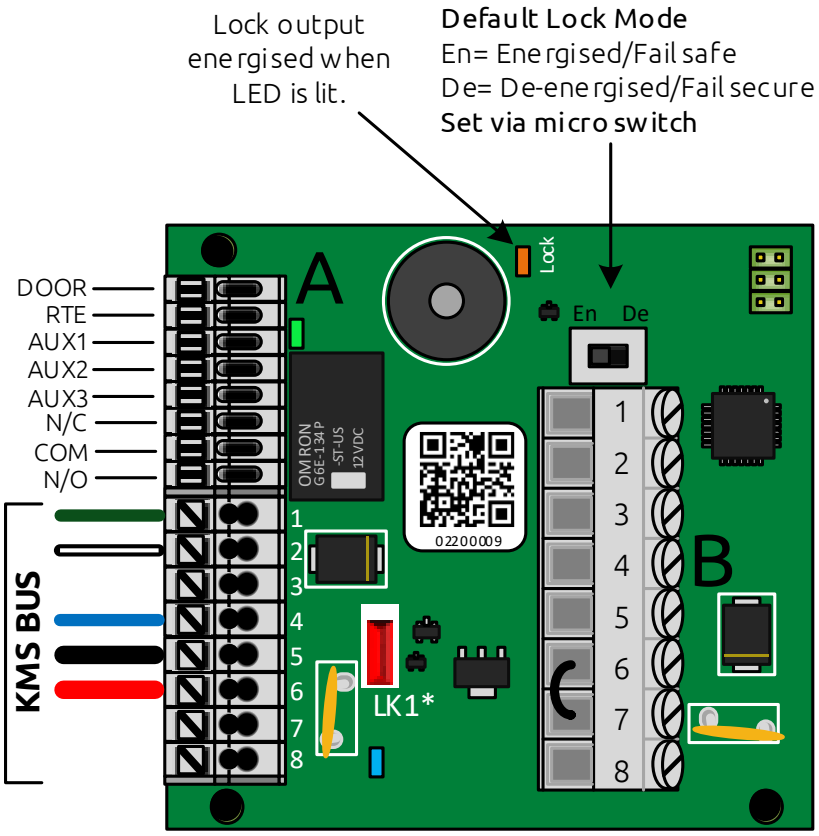

Note: Due to space considerations on the PCB, terminations are labelled 1 through to 8.

Lock Controllers are designed to control a single door only. Two outputs are provided by means of a powered output to supply up to 2 Amps @12V DC to a lock directly and also a volt free SPDT (Single Pole Double Throw) relay to interface with other equipment. This has a maximum current rating of 2 Amps @ 12V DC. The relay has been designed to follow the powered output and cannot be programmed independently.

The Lock Controller features the same auxiliary inputs as the System Controller, these are listed on the following page.

The Lock Controller features BUS Communication LEDs. These are to be used as a guide to the M2S and S2M signals.

Note: Earlier versions of the Lock Controller have alternative wiring configurations, contact KMS Technical Support for more information.

Lock Controller Input Connections

1	DOOR: Door monitoring contact (can be assigned as NC or NO).
2	RTE: Request to exit (default set to 5 seconds). *
3	Aux 1: Input - switch to 0V – Trades (requires time profile set) default always on. **
4	Aux 2: Input - switch to 0V – Local Emergency, local door only releases. **
5	Aux 3: Input - switch to 0V – Global Emergency, all doors released system wide. **
6	N/C: Normally closed relay contact 2 Amp Maximum.
7	N/C: Relay Common 2 Amp Maximum.
8	N/O: Normally open relay contact 2 Amp Maximum.

The auxiliary inputs above have been assigned their default function. Functions can be configured differently from the above. These are the defaults programmed by KMS for all systems unless otherwise stated.

Inputs marked * require a momentary trigger to give an output, this means the system will not allow another input trigger until the last is removed. For example, if the RTE goes closed this contact must open again before another RTE input can be triggered.

Inputs marked ** can either be triggered momentarily or function with a held-on input. For example, if AUX3 is held closed to 0V then the function continues to be triggered, in this case all doors would remain open until the trigger is removed.

Test procedure

Set multi-meter to DC volts, measure between a 0V and an input - around 3.3v volts should be shown. If NO voltage is read, suspect SHORT across input. i.e. RTE wired normally closed.

Lock Controller Output Connections

1	0V: Connect to PSU 0V - ONLY CONNECT IF SYSTEM NOT OEM PRE-WIRED.
2	0V: Used for input triggers.
3	0V: Used for input triggers.
4	0V to Lock: Switched 0V from the lock – energises the lock when switched on.
5	12V to lock: Constant.
6	From OVR: +12V from Emergency lock over-ride switch (usually fitted with metal loop).
7	To OVR: +12V to Emergency lock over-ride switch.
8	+12V: Local power supply input 12V - ONLY CONNECT IF SYSTEM NOT OEM PRE-WIRED

Note: Thermal fuse (across 7/8) provides protection for the board.

The powered output features transistor-based switching of lock power. If testing using a multi-meter a minimum current sink of 50ma is required to correctly read a voltage drop when the output is triggered.

Test procedure

Have suitable load wired across terminals 4 & 5. Ensure lock mode switch is set to EN and orange LED is lit. LED will go out if mode switch set to DE-EN. Set multi-meter to DC volts, measure across terminals 4 & 5, if NO voltage is read check terminals 6 & 7 for metal loop, tighten if required.

If Lock is connected and powered but does not drop when triggered, i.e. orange LED goes out and tone is heard, check for shorts from lock to 0V/ground. Remember Lock Controller switches 0V NOT 12V!

Communications BUS Input

1	M2S: Communication BUS — Master to Slave.
2	0V: Tied to System Controller 0V.
3	12V: Common connection with 6.
4	S2M: Communication BUS — Slave to Master.
5	0V: Common to connection 8.
6	12V: Common connection with 3.
7	BUS mode: Not used.
8	0V: Common connection with 5.

Note: The 0V and +12V connections are common.

Reader Interface

The Reader Interface provides an interface between non-BUS KMS standard readers and other types (e.g. Wiegand) so that they can be integrated with a Simplekey 4 system.

The Reader Interface has two channels for connecting a single reader. Typically, one reader per door, if read-in and read-out is required then a single reader interface is used per door.

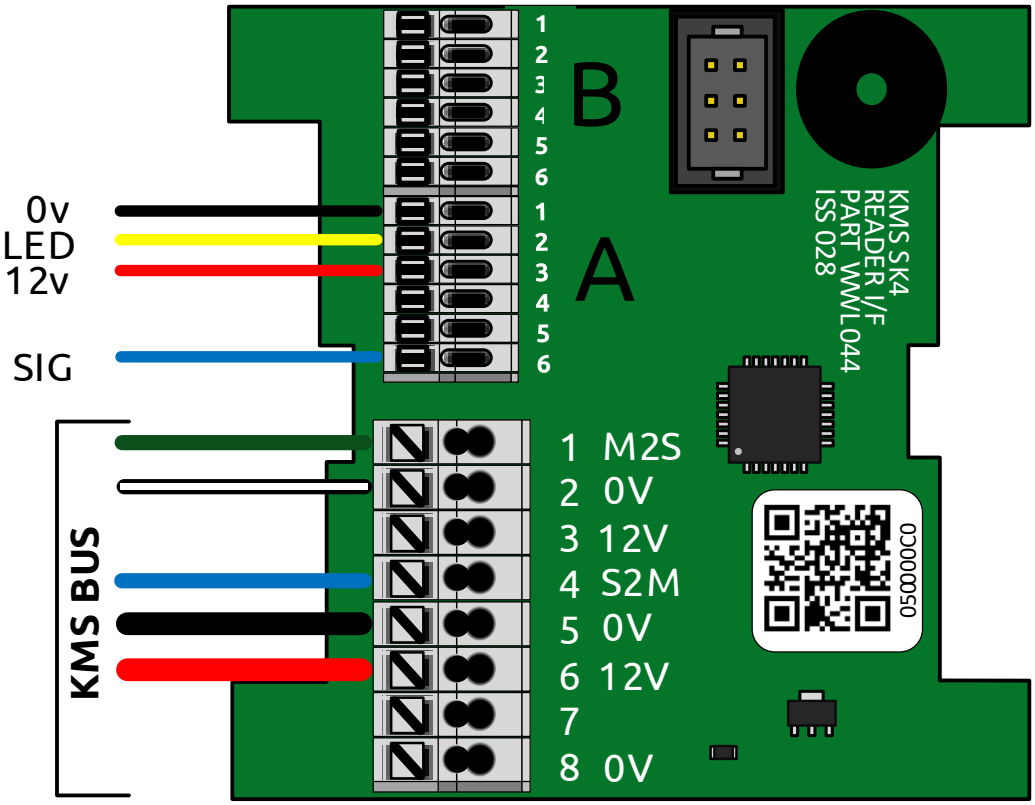

Note: Due to space considerations on the PCB, terminations are labelled 1 through to 8.

A reader Interface can control *up to* two readers per board. Readers can be configured to both read in, i.e. one high mounted and one low mounted on entry or used to read IN and OUT to a door. This allows users of the website to accurately monitor activity as each event is labelled as 'Entry' or 'Exit'

Alternatively, a reader Interface can be used to control two readers split between two doors, the outputs for these doors do not have to be in the same cabinet.

The reader +12V outputs are fuse protected using on board thermal fuses.

Reader Connections A & B

1	0V
2	LED – Controls reader LED i.e. goes green if token is valid.
3	+12V
4	Data 1 (Wiegand 26 bit).
5	Data 0 (Wiegand 26 bit).
6	SIG

Reader A (Ch1) Default for Door 1 - Reader B (Ch2) Default for Door 2

Communications BUS Input

1	M2S: Communication BUS — Master to Slave.
2	0V: Tied to System Controller 0V.
3	12V: Common connection with 6.
4	S2M: Communication BUS — Slave to Master.
5	0V: Common to connection 8.
6	12V: Common connection with 3.
7	BUS mode: Not used.
8	0V: Common connection with 5.

BUS Readers

Compatibility

BUS readers are only compatible with Simplekey 4 Controllers at version 3401 or higher.

BUS readers can work using KMS Sharktooth, Entrotag, PAC, Stanley and GDX proximity tokens and cards.

Cabling

BUS readers MUST be wired using Cat5, Cat5e or Cat6 cable for optimum operation. Cable should be pure copper, the use of CCS/CCA will degrade system performance. The maximum cable run will vary on installation but 100m is nominal. Up to two BUS readers can be connected to one Cat5e cable but please contact KMS Technical with specification of cable before installation.

Installation

The Panel Mount BUS Reader is designed to fit within metal panels no thicker than 2.0 mm with a 40mm square cut-out for the front of the reader to protrude through.

Stainless steel Vandal BUS Reader designed for surface mount on non-metallic surfaces, mounting on metallic surfaces may decrease reading range.

BUS readers come with a 0.5m flying lead Cat5 cable, there are two types of BUS reader.

See wiring instructions for each type on the following page.

Note: BUS Readers are uniquely addressed using the 8-digit UDN, for example 04000009. The reader will need to be assigned to a door by KMS, up to two readers can be assigned to any one door.

Connection

KMS provide a dedicated connector to wire all BUS readers into the system. This is known as an RJ45 BUS Adaptor.

Up to 3 BUS readers can be connected to a single RJ45 BUS adaptor.

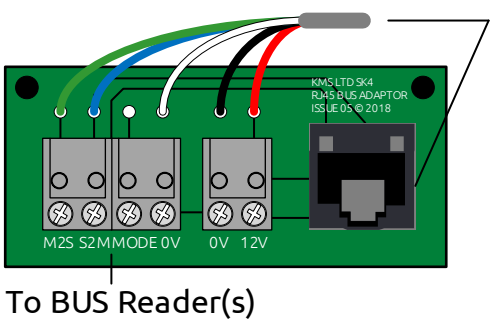

BUS Reader Wiring

Orange	12V (up to 100mA max).
White/Orange	0V current return.
Green	M2S - Communication BUS - Master to Slave.
Blue	S2M - Communication BUS - Slave to Master.
Brown	Mode – Wire to Orange 12V.
Blue / White	External speaker negative (Typical 50mA, maximum 100mA) remove if not used.

Note: BUS Readers with a UDN lower that 04000161 will use a different wiring configuration.

Note: Due to changes in the design earlier readers have an alternative wiring configuration. Each reader has its wiring version attached when shipped. Please contact KMS Technical support for more information.

Locks

Locks are powered directly via either the System Controller or Lock Controller. Each output can supply up to 2 amps DC. All locks should be suitably suppressed using either a Metal Oxide Varistor (as supplied) or 1N4000 series diode, all suppressants to be fitted at lock.

Refer to the lock manufacturer's documentation for information on individual locks.

Modem

The GPRS modem uses a standard size SIM and has no user programmable functions.

A standard SMA input is provided for the antenna. The antenna should be as close as possible to the controller to ensure the best signal level, this means using the shortest possible cable available whilst still fitting the antenna in the best external location. A large excess of antenna cable will only reduce signal levels at the modem, a small excess should be tidied whilst also trying to avoid the formation of coils. If the excess is great then the next lowest size of antenna should be used.

A smart SIM is provided with each System Controller capable of roaming all networks. These are provided by KMS who manage the SIM contracts. A customer may want to provide their own SIM, in this case the modem requires different configuration. Please contact KMS technical support for more information.

Note: Location of the antenna is important to ensure the best signal level. Testing signal levels to get the best location should be an integral part of the initial site survey. Further details on recommended GSM/GPRS signal testers are available from KMS technical support.

Basic System Wiring

System Wiring Overview

This figure shows a basic system setup showing all components.

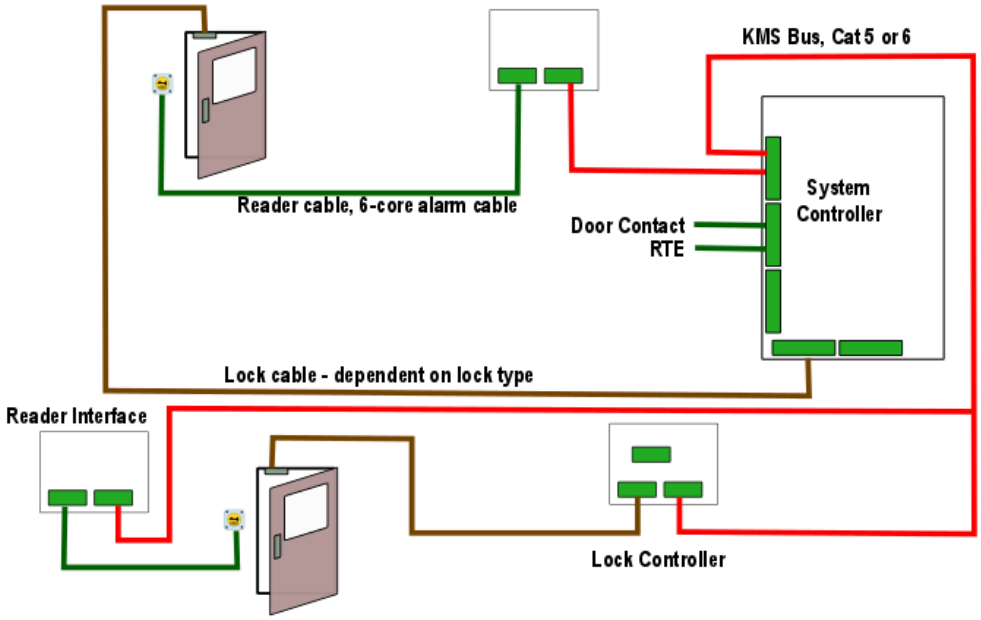

The following diagrams breaks the connections into these blocks:

- Controller with Lock direct and via a Lock Controller
- Controller with Reader Interface / Reader

System Wiring Example 1

This image shows a system wired to its local power supply with KMS BUS data connections direct to the System Controller.

In this example KMS are powering the locks directly. This is the recommended installation configuration. Each Lock Controller does provide a normally open/normally closed volt free relay in order to trigger external equipment, for example a powered door closer or door entry system.

Note: Always isolate power before making or breaking connections.

Typical example of daisy chained reader Interfaces and lock controllers using cabinets own local power supply. This assumes system controller is located in separate cabinet with BUS runs M2S, S2M and 0v to system controller or next cabinet. Ensure BUS runs are made using Cat5 or twisted pair conductors. Pure copper only no CCS or CCA to be used.

Note: End lock controller is powered using connections 3=12v 8=0v. All 0v and 12v connections are common.

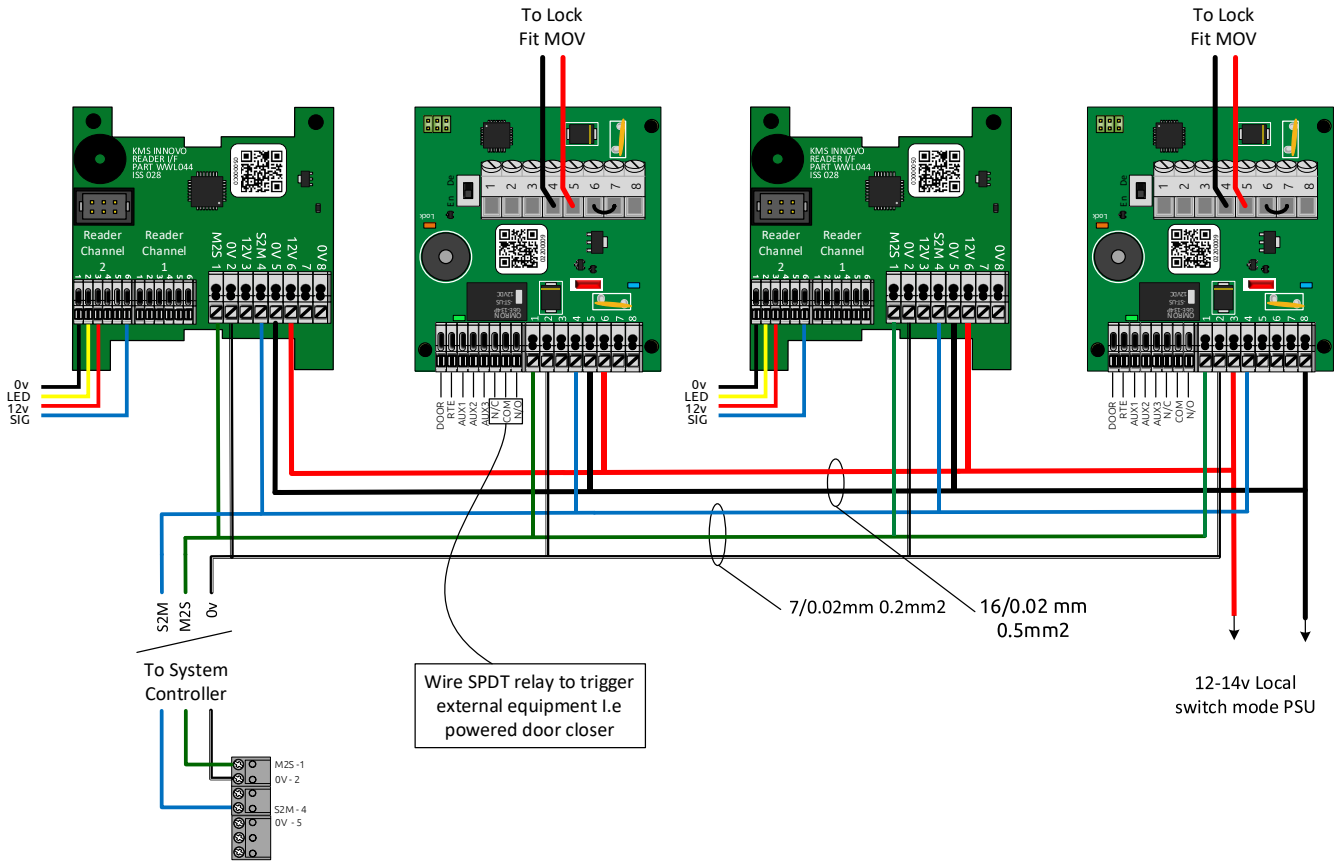

System Wiring Example 2

This image shows a system wired to a local PSU which supplies the logic side of the controller with power but NOT lock power - a separate PSU is supplying the locks. KMS BUS data connections are wired between system cabinets. This is wired so KMS are providing the lock power directly from the Lock Controllers.

LK1 (red wire link) is cut to ensure +ve lines are not joined between power supplies. This method of system wiring is uncommon, please contact KMS Technical Support for further information.

Note: Care MUST be taken cutting LK1 due to proximity to other PCB components! KMS will not be responsible for damage caused by mis-installation. Always isolate power before making or breaking connections.

Example of daisy chained reader Interfaces and lock controllers where a different power supply is used for the lock outputs than is used for the board power.
LK1(Red Wire Link) is cut to ensure +ve lines are not joined between the two power supplies. Care MUST be taken cutting LK1 due to close proximity to PCB components!

Note: 1x PSU powering system nodes, 1x PSU powering Lock's
This assumes system controller is located in separate cabinet with BUS runs M2S, S2M and 0v to system controller or next cabinet. Ensure BUS runs are made using Cat5 or twisted pair conductors. Pure copper only no CCS or CCA to be used.
Note: End lock controller is powered using connections 3=12v 8=0v. All 0v and 12v connections are common.

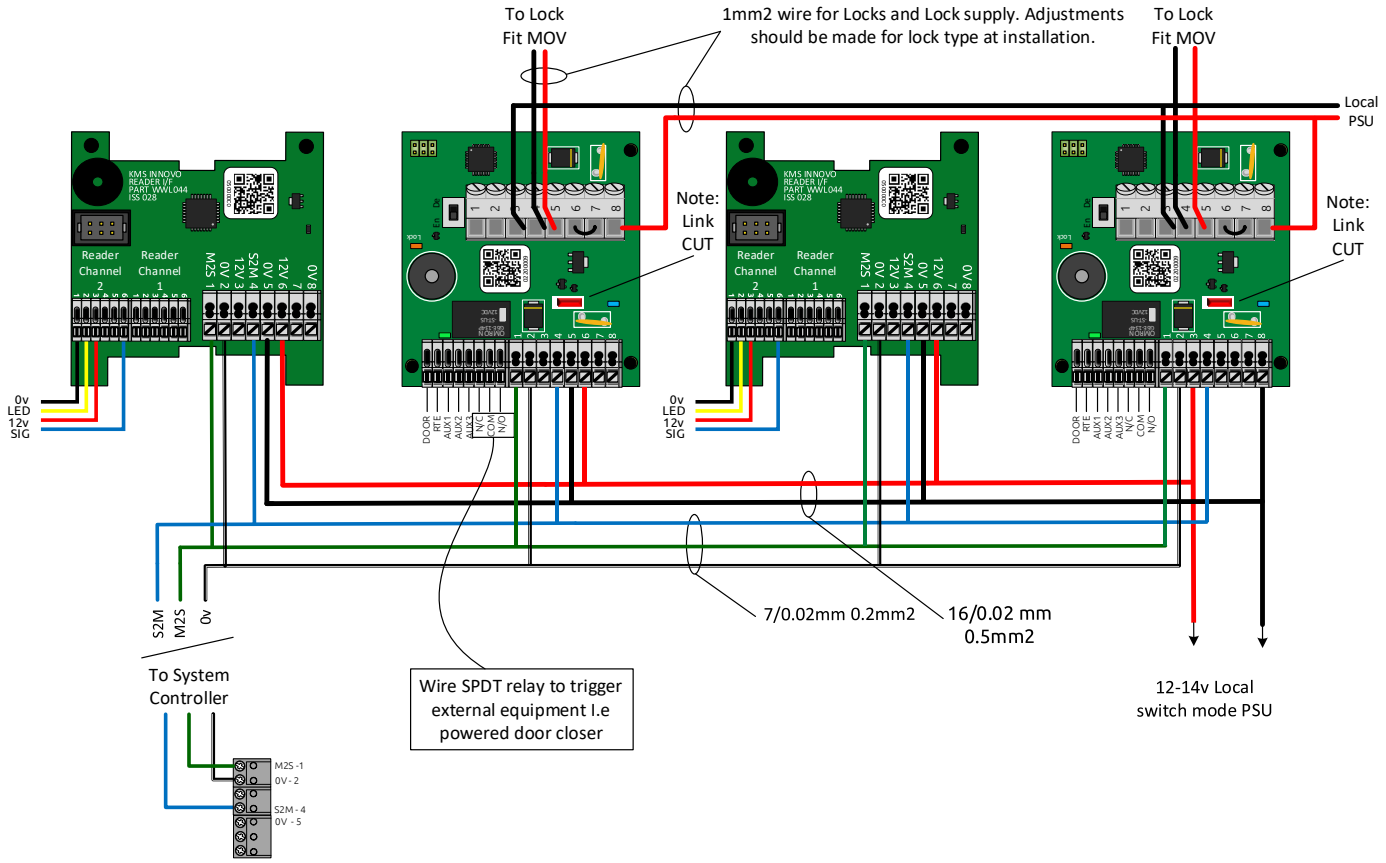

Lock Connection

Depending on the location and type of lock it can be connected directly to the controller or using a Lock Controller.

Lock Suppression

A Metal Oxide Varistor (MOV) MUST be fitted across the cables feeding power to the electrical or magnetic lock. The MOV will suppress the back E.M.F. spike returning to the host controller when power is removed from the lock. The MOV should be fitted as close as possible to the electric or magnetic lock. Failure to properly supress locks will void any warranties to that piece of equipment.

Health and Safety

Any installation must comply with any local Fire or Health and Safety regulations. Any secured door that may be part of an escape route should be fitted with:

- A Fail Safe lock to ensure that the door is released if the power fails. KMS recommend that a magnetic lock is used as these are less likely to jam or seize.
- A normally closed Break-Glass or Manual Pull in the lock supply wiring to ensure that the Fail Safe lock can be immediately de-powered.

RTE/Door Contact Switch

Request to Exit and door contact switches are connected to the lock inputs on the controller.

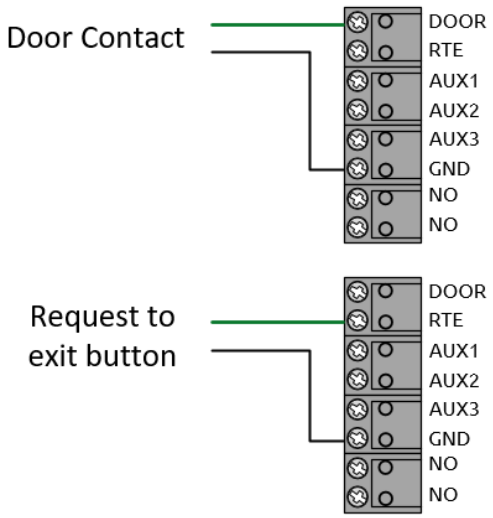

Auxiliary Inputs

Three auxiliary inputs are provided per lock output, these functions are pre-determined by KMS. All inputs are normally supplied open going closed to the terminal marked GND, unless otherwise requested.

All inputs sit high at 12V and are pulled down to GND by a pull up resistor.

Note: Use only the terminals marked GND or 0V for triggering an input. Do NOT use lock 0V or mains earth connections as damage may occur!

As the default, the auxiliary inputs are set as: -

- Aux 1 is used as a trades input and requires a time profile to be assigned, this can be done by KMS technical support.
- Aux 2 is used as a local emergency, for example a monitor break glass switch. When triggered this will release the triggered door ONLY. The door will continue to stay unlocked whilst the contact is at GND and an event may be generated on Simplekey Web.
- Aux 3 is used as a global emergency input, for example this can be connected across a normally open volt free relay output of a fire alarm panel. When triggered this will release ALL doors on the system (1-16). The door will continue to stay unlocked whilst the contact is at GND and an event may be generated on Simplekey Web. In addition, the System Controller will sound a local alarm. This will need to be reset by either the Front Panel (if available) or Simplekey Web.

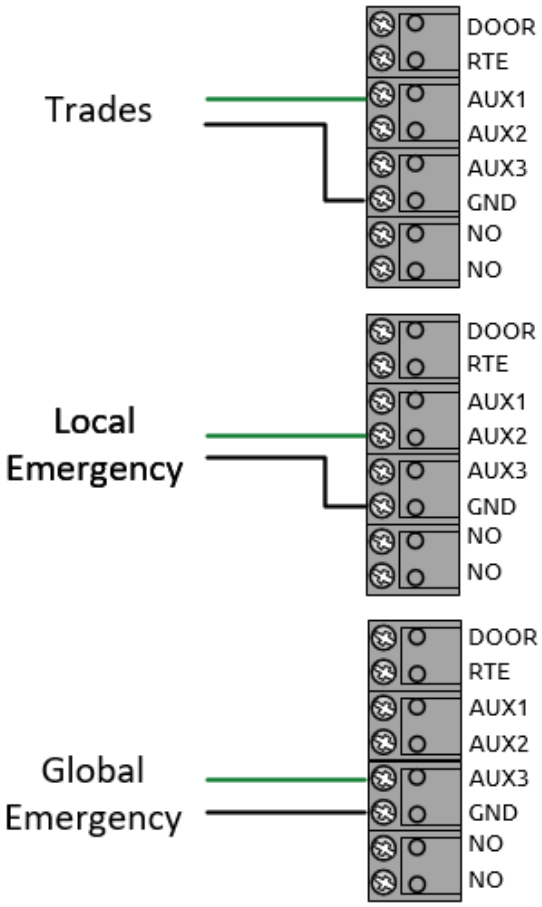

Direct Connection to the Controller

It is vitally important that all locks are wired intrinsically safe. This means that the access control system should never be the sole means of releasing the doors.

Direct connection to the controller is via the lock connectors at the bottom of the controller. The controller supplies power to the lock with the lock connected between Lock 0V and Lock 12V to lock.

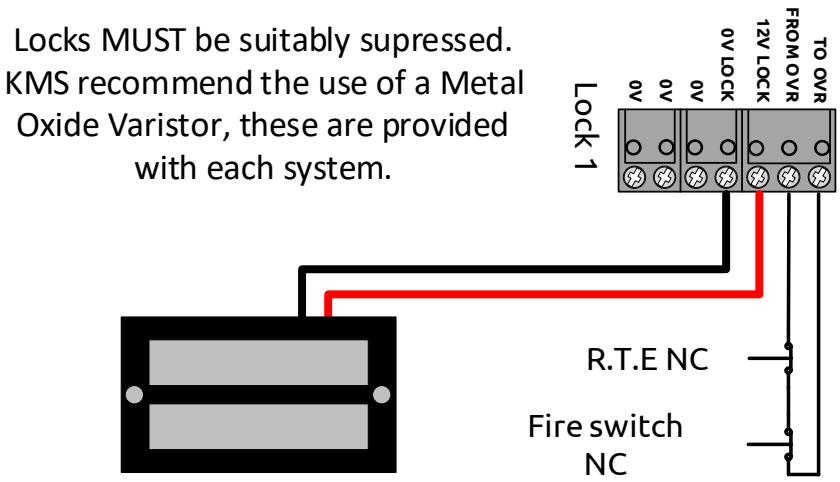

An emergency over-ride switch can be fitted that disables the power to the lock regardless of the access control system. The wiring for an emergency over-ride switch depends on the type of lock being used:

- A Power-to-lock type requires a push-to-break switch between FROM OVR and TO OVR. Alternatively, the +12V wire can be wired through the RTE and fire switch NC.
- A Power-to-unlock type requires a push-to-break switch between 0V to 0V to lock, and the metal link between FROM OVR and TO OVR. This depends on having power to the system in order to open the door during an emergency

Note: The switch must be rated for the current that the lock takes (i.e. a lock taking 2A requires the switch to also have a 2A rating).

If an emergency over-ride switch is not fitted then a metal link is required between the terminals 'FROM OVR' and 'TO OVR'.

The simplest lock configuration is one lock-strike connected to the System Controller, which requires:

- Lock between 0V to lock and 12V to lock (with MOV fitted across lock terminals).
- A metal link is required between FROM OVR and TO OVR (fitted during manufacture).

OVR Connections

The most commonly used lock types are magnets, these require a constant supply to keep the door locked and will release when the power is removed. The magnet's lock supply must always be wired through a mechanical egress device, these being Request to exit buttons (RTE) and often emergency break glasses.

KMS would recommend the lock +12V connection is wired through the RTE normally closed contacts, this will ensure the +12V connection is broken on exit as well as the system dropping the 0V.

OVR connections allow a direct break of the 12V output. The Lock Controller offers the same connection (see page 27).

Example showing RTE breaking +12V to lock

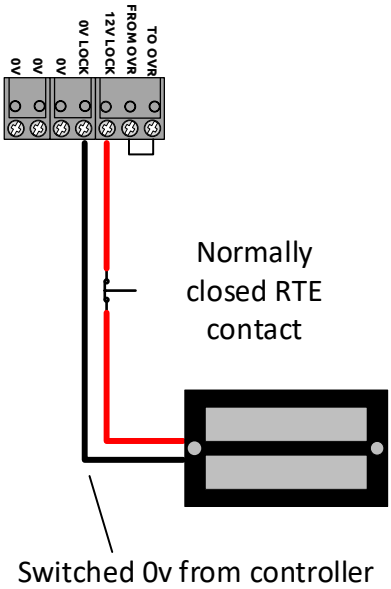

Example showing the OVR connections being used, this breaks the +12V output direct from the System Controller rather than near the lock.

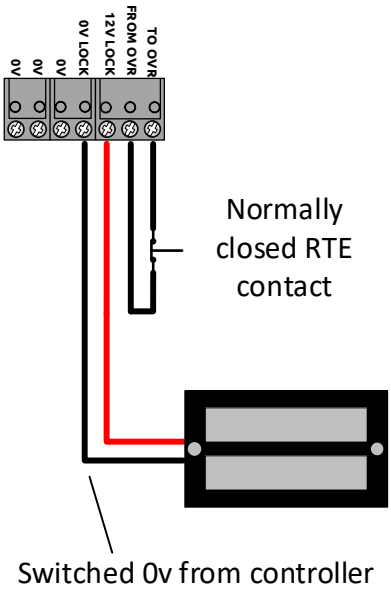

Connection Via a Lock Controller

The main wiring scheme is the same as for direct connection to the System Controller.

Two options are provided for control of the lock power.

- See System Wiring Example 1

  A local PSU is used to power both the Lock Controller logic and locks. Power is input using the KMS BUS terminations. KMS can configure the Lock Controller to Fail Safe or Fail Secure.

- See System Wiring Example 2

  A local PSU is used to power the locks only. Lock Controller logic power is provided by other means. The Lock Controller needs to be configured in the following manner.

  Cutting the wire loop (LK1*)

  Wiring the local power supply +12V to B8 on the lock controller.

  Wiring the local power supply 0V to B1 on the lock controller.

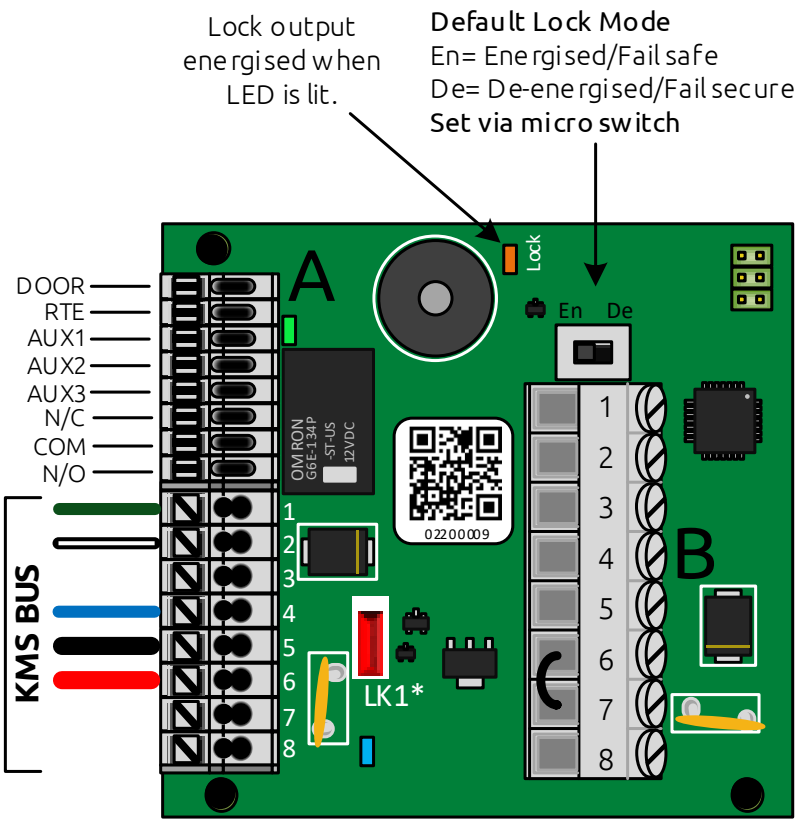

Lock Controller Connections

Connection A - Inputs	Connection B - Outputs
1= Door Contact	1= 0V
2= RTE	2= 0V
3= Aux1	3= 0V
4= Aux2	4= 0V to Lock
5= Aux3	5= 12V to Lock
6= Relay Normally Closed	6= From OVR
7= Relay Common	7= To OVR
8= Relay Normally Open	8= External +12V PSU for Lock

Note: The onboard miniature relay is rated at a maximum of 2A, specify cable accordingly!

Connection Via the Reader Interface

The Reader Interface allows non-BUS readers to be used with the KMS system. The following diagram shows the connections from the controller to the Reader Interface and from the interface to the reader.

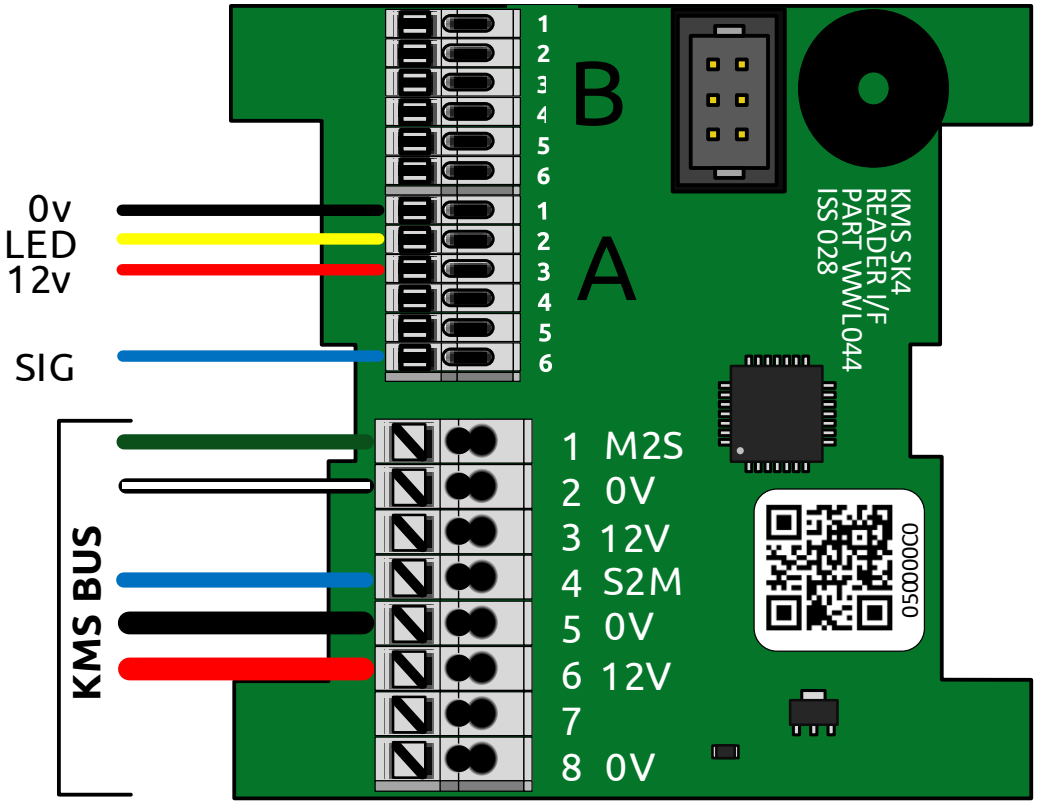

Reader Connections 1 & 2

1. 0V
2. LED/ Speaker
3. 12V
4. Data 1
5. Data 0
6. SIG

Note: Only one reader can be wired into each channel, where a read IN and read OUT configuration is required, a separate Reader Interface will be required per door. Refer to technical support for further information.

Security / Alarms

Power Cut

If there is a power cut then the system is set up to automatically unlock the doors when Fail Safe locks are used. When Fail Secure locks are used the system will apply power to unlock the doors.

When power is returned the system resets and locks operate as normal.

Loss of Data

If the (data) line from the BUS to the reader interface is cut (M2S/S2M) then the Reader Interface alarm sounds for one minute and then beeps every 5 seconds until the problem is fixed. The light on the corresponding reader also flashes and an alarm event is generated.

If data is lost to the Lock Controller then an alarm sounds and, dependent on the configuration, the RTE and Lock Controller does/does not operate the lock outputs to make 'safe' the building.

System Controller

The door contact input on the System Controller is Off by default (0 seconds). This means that if the door does not close for any reason (e.g. propped open) there is an alarm on the controller and a Door Left Open event is generated.

If the door (contact) is opened without the use of an RTE/authorised token then there is an alarm on the controller and a Door Forced event is generated.

Note: Door Forced alarms must be acknowledged via Simplekey Web or via the Front Panel* (if one is connected). Door Left Open alarms reset when the door is closed.

CATO

Introduction

KMS have designed an auxiliary plug on PCB with two features.

The first feature will enable two System Controllers to be connected together over a two wire twisted pair RS485 link. The RS485 connection has a maximum design transmission of 500 metres. One System Controller will become the 'Master' and the other the 'Slave'.

The second feature is the ability to connect a legacy Simplekey 3 Controller to utilise the GPRS communication of the System Controller. This can enable older installations to be upgraded onto the cloud easily and cost effectively.

The CATO board can only support a single RS485 or RS232 connection - both data connections cannot be used at the same time. For improved system behaviour the RS232 connection is recommended, this is limited to a maximum of 15 metres between CATO boards.

Note: Installers must ensure the 'Ground Zap' connection is taken to mains earth using a minimum 4mm earth cable.

Benefits

- A single SIM card can be used reducing the on-going costs to the end user.
- A single GPRS antenna is required easing installation and lowering costs.
- The maximum number of doors is increased from 16 to 32 over a single GPRS connection.
- A maximum of seven Simplekey 3 door controllers may be connected to a Simplekey 4 System Controller when selecting the RS232 output of the CATO board.

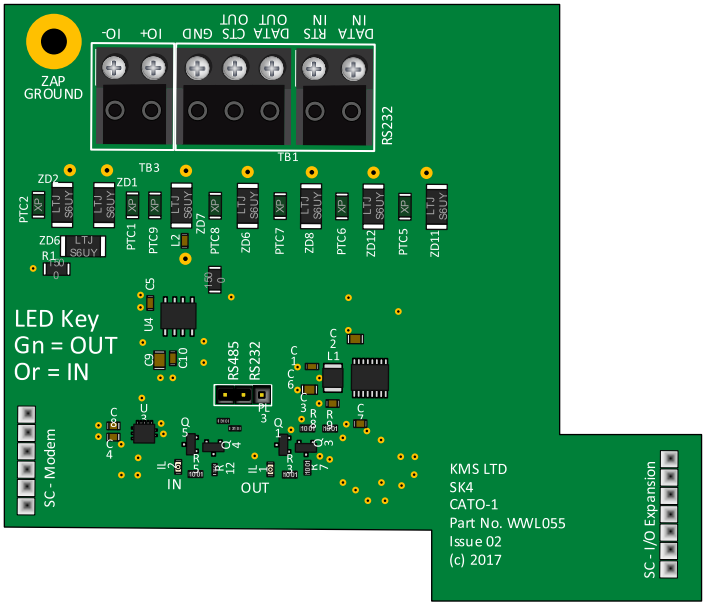

Connecting two Simplekey 4 System Controllers

CATO Input / Output Connectors

The CATO board has two sets of connectors, one for each type of data connection. KMS recommend using RS232 where possible due to improved latency times and system performance.

- Two wire RS485 transmission with up to 500 metres between two CATO boards. Set jumper to RS485 on each CATO.
- Five wire RS232 transmission for local connections up to 15 metres. Set jumper to RS232 on each CATO.

Connecting two Simplekey 4 System controllers will either use RS232 or RS485. The System Controller containing the SIM card has been set up as the 'Master' and the other will be the 'Slave'. Only two system controllers can be connected together. Swapping these over requires additional programming by KMS.

CATO to CATO terminations

RS232 For connections up to 15 metres away from the System Controller

Master CATO Board	Slave CATO board
DATA IN	DATA OUT
DATA OUT	DATA IN
RTS IN	CTS OUT
CTS OUT	RTS IN
GND	GND

RS485 for connections more than 15 metres away from the System Controller

Master CATO	Slave CATO
IO+	IO+
IO-	IO-

Connecting a Simplekey 4 System controller to a Simplekey 3 controller.

This will utilise the RS485 connections. The System Controller will be designated as the 'Master' and the others are designated as Slaves. A total of seven Simplekey 3 door controllers can be connected together over this RS485 connection.

The System Controller will always be the 'Master' due to it containing the GPRS modem and SIM.

All seven Simplekey 3 controllers will need to be addressed from 1 through to 7 and also have their master/ slave jumpers set as slaves, this is to the right-hand position. A twisted pair must be used for the RS485 transmission network.

CATO to Simplekey 3 terminations

RS485 connections up to 500metres.

CATO Board RS485	Simplekey 3 RS485 Input
IO+	R+
IO-	R-

SEM

Introduction

The Simplekey Event Manager (SEM) has eight outputs in the form of double-pole volt free relays, and eight local inputs. A local input may be a switch or trigger from 3rd party equipment. In addition to local inputs, an external reader can be used as a form of input. Typical uses for the SEM would be lift control where a single reader is used and various lift buttons are activated depending on the token holder's access profile. The example below shows lift control but also the SEM being used to switch on lighting at the same time

Connections

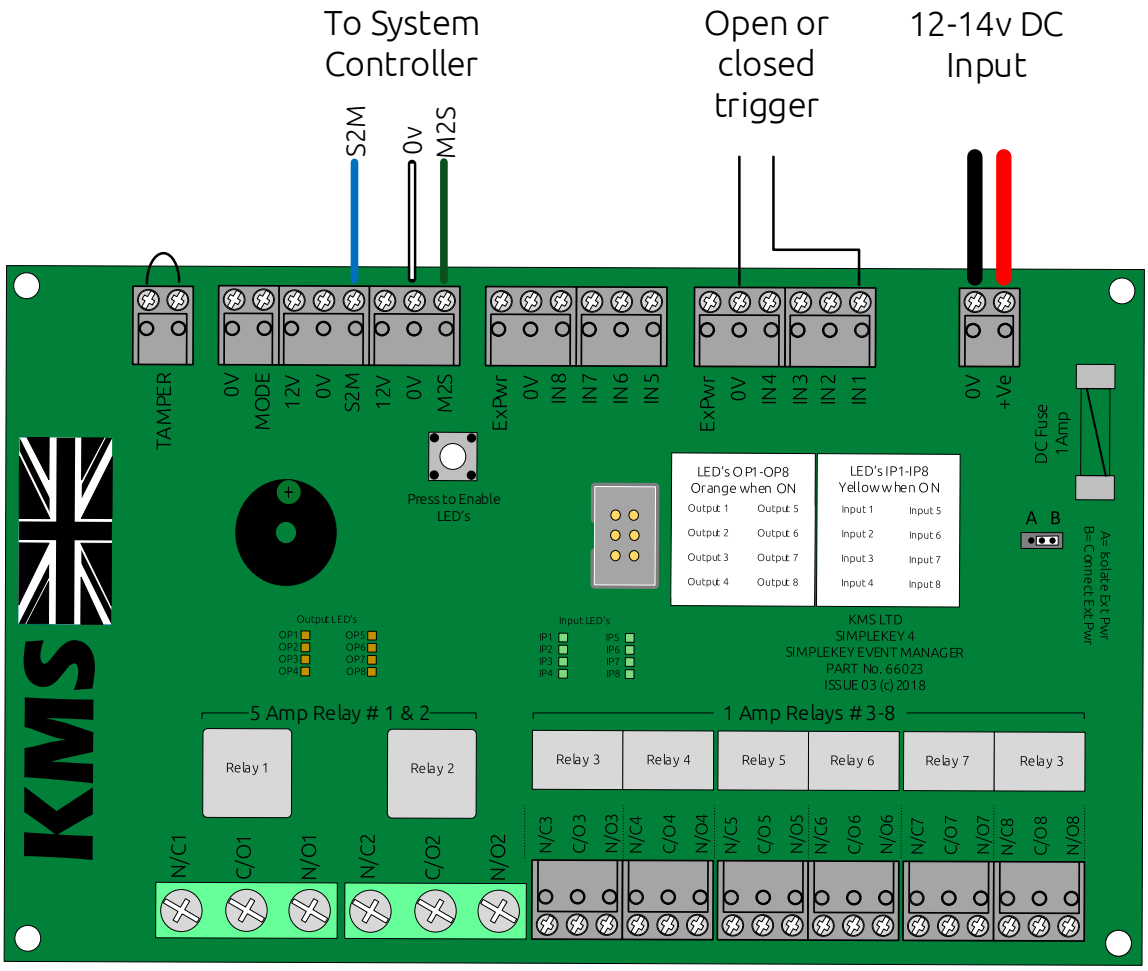

Volt free output relays.
Relay 1&2 5Amp 240v
Relay 2-8 1Amp 12v

Glossary

S/C - System Controller
R/I - Reader Interface
L/C - Lock Controller
E/K - Engineer's Keypad
F/P - Front Panel
B/R - BUS Reader
C/D - Comms Device
SEM - Simplekey Event Manager
SSR - Solid State Relay
DE-EN - De-energised Default
EN - Energised Default
M2S - Master To Slave
S2M - Slave to Master
RTE - Request To Exit
OVR - Over-ride
N/C - Normally Closed Relay Connection
N/O - Normally Open Relay Connection
C/O - Common Relay Connection
MED - Main Entrance Door
RED - Rear Entrance Door
SPDT - Single Pole Double Throw

Entrotec PTE/EPTE/LED

Push to Exit with LED Illuminated Ring
1 Gang Overlap

ENTROTEC

Entrotec PTE/EPTE/YR

Push to Exit with LED Illuminated Ring - 1 Gang Overlap

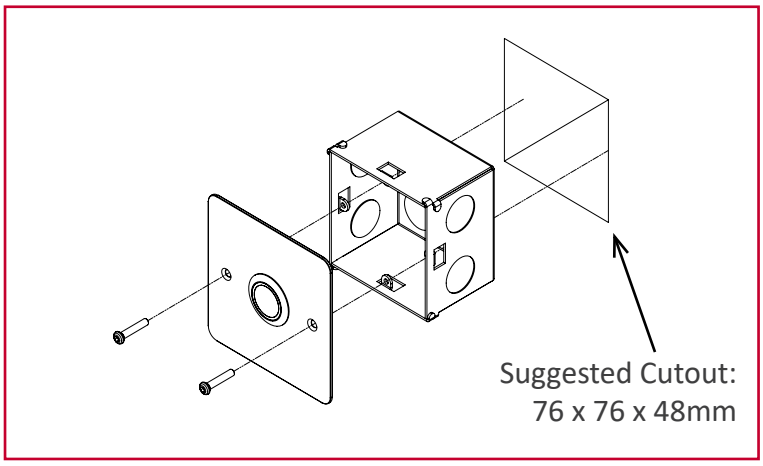

OVERVIEW

The Push to Exit features a double-pole switch in a vandal resistant, stainless-steel design. The push button allows normal egress through communal doors and egress routes. The switch can be pressed and held for additional fail-safe operation. The illuminated bi-colour LED ring can be configured to indicate lock status (e.g. red for locked, green for unlocked).

The switch provides a momentary 'Double Pole, Double Throw' action with one pole to request a timed lock release and a separate pole connected in series with fail-safe locks (if fitted) to remove power from the lock. The front plate is engraved 'PUSH TO EXIT' in 6mm green characters and 'In emergency press and hold exit button while opening door' in 5mm red characters.

The specification and installation of door release and emergency exit devices on communal doors must be in full compliance with the relevant Building Regulations and achieve final 'sign-off' by local Building Control or Approved Inspector if required. The specification is dependent on the application and security level required and should align fully with any fire evacuation policies.

TECHNICAL DATA

- **Front Plate** — Stainless-steel 304 (Overlap Style)
- **Front Plate Dimensions** — 86 x 86 x 1.5mm
- **Backbox** — 1 Gang Electrical box, Galvanised Steel
- **Backbox Dimensions** — 75 x 75 x 47mm
- **Switch Configuration** — 1x Momentary Double Pole, Double Throw
- **Switch Construction** — Stainless-steel, 20mm Actuator with LED
- **Switch Rating** — 5A, 250VAC
- **Connections** — 2 Wire-ends per Pole, 2 Wire-ends for LED
- **Front Fixings** — 2x M3.5 Pin Hex Security Screws, Raised Countersunk Head, Stainless-steel

BBXPTESMPC - Optional Accessory Green Powder Coated Surface Box

Secured by Design
Official Police Security Initiative

Entrotec Ltd, Access House, 5 Ashwood Court, Oakbank, Livingston, EH53 0TL
Telephone: 01506 886230 | Support: 01506 886235 | Email: saleshq@entrotec.co.uk | Website: www.entrotec.com
DS-PTE-EPTE-LED - ISSUE 01