Oakleaf
Building Surveyors

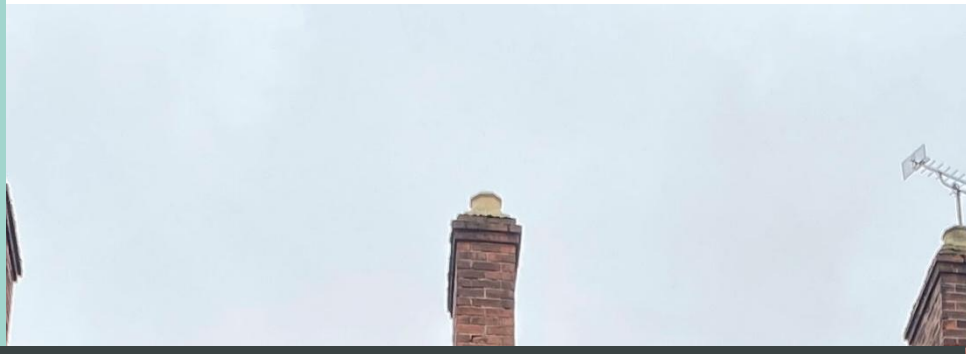

DESIGN & ACCESS and PLANNING STATEMENT

In support of a planning application for the Change of use from shop (class E) to dwelling houses (class C3) to the first and second floor only to form 2 no. 2 bedroom dwelling units (maisonettes) and associated alterations to the shop front

at

90-91 FRIAR STREET

Reading

Berkshire

RG1 1EN

Issue: **2**

Ref: A24/01

Date 20 February 2025

Oakleaf Building Surveyors Limited
10-14 Duke Street
Reading, RG1 4RU

Tel. 0118 9560525
Email. contact@oakleafbs.co.uk
Web. www.oakleafbs.co.uk

CONTENTS

A	**DESIGN & ACCESS STATEMENT**	**2**
a)	Introduction	2
b)	Proposal	3
c)	Design Statement	3
d)	Access Statement	5
e)	Biodiversity Statement	5
f)	Air Quality Statement	5
g)	Noise Statement	5
h)	Sustainability Statement	6
B	**PLANNING STATEMENT**	**6**
a)	Introduction	6
b)	Relevant Local Plan Policies	6
c)	Affordable Housing	7
d)	Community Infrastructure Levy (CIL)	8
C	**SUMMARY**	**8**
D	**APPENDICES**	**8**
	Air Quality Assessment prepared by Accon UK Environmental Consultants	
	Noise Assessment prepared by Auricl Acoustic Consulting	

A DESIGN & ACCESS STATEMENT

a) Introduction

The application site comprises a three-storey mid-terraced Victorian property which was used as a shop (Aldridges) with ancillary accommodation located on the western edge of Reading town centre opposite Greyfriars Church. The property has remained vacant since 2017.

A planning application was made in 2024 under application number PL_24_0604. This effectively sought to renew permission granted on 12 June 2017 under application number 170501. The earlier planning permission was not implemented and in accordance with condition 1 of the full planning approval, permission had expired. However, it was refused.

This revised proposal consists of the same conversion of the upper parts into two self-contained maisonettes. The internal layouts are substantially the same as previously approved, except for some modification of the staircases to ensure that the means of escape from the second floor is enclosed, as required under current Building Regulations. The ground floor and basement will remain as shop unit.

Existing Front Elevation – View from Friar Street

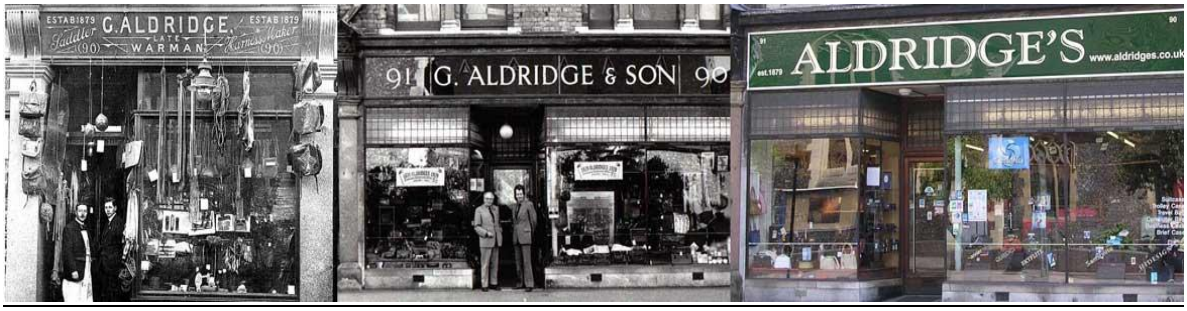

Aldridges shopfront through the years (courtesy of https://www.aldridges.co.uk/)

b) Proposal

The proposed development comprises the change of use from shop (class E) to dwelling houses (class C3) to the first and second floor only to form 2 no. 2 bedroom dwelling units (maisonettes) and associated minor alterations to the shop front.

The proposed development is shown on the accompanying drawings, numbered;

- AD/01 rev B Existing basement and ground floor plans
- AD/02 rev A Existing first and second floor plans
- AD/03 rev A Existing front and rear elevations
- AD/04 rev D Proposed basement and ground floor plans
- AD/05 rev B Proposed first and second floor plans
- AD/06 rev D Proposed front and rear elevations
- AD/07 rev B Site and location plans

The proposed gross internal floor areas of the new dwellings are as follows;

- **Unit 1** (two bedroom / 3 person) 64m^2
- **Unit 2** (two bedroom / 3 person) 64m^2

The proposal seeks to bring back into viable use a vacant and dilapidated building within Central Reading.

c) Design Statement

The property is symmetrical in form and consists of a traditionally built Victorian building with solid 9'' walls external brick walls of grey stocks laid English bond, with contrasting red stock banding courses with terracotta embellishment, pilasters to mullions with decorative capitals and bases, and moulded lintols and brackets at eaves level. The roof is pitched and covered with natural slates. Three red brick chimneys with clay pots have been retained. The windows are of a single glazed double-hung sliding sash design although the profile of the sashes indicate that these ate not original. The building still retains its original shopfront with stallriser, recessed entrance and large fascia.

While two new access doors to the flats will need to be inserted, in accordance with the guidance in Reading Borough Council's Supplementary Planning Document 'Design Guide for Shopfronts' (January 2022) the revised proposal is to retain as much of the original shopfront as possible. The granite pilasters, bases and corbels at either end of the shopfront will be retained, the stallriser cleaned and retained, the bronze mullions and transoms will be cleaned. The leaded transom lights will be cleaned and retained, as while the new doors will match the pattern of the original central shopfront door. The recessed entrance, door and terrazzo tiling are also preserved in the new design.

Instead of using opaque glass or films, neutral coloured blinds or curtains will be used to screen the flat entrances.

Other than alteration of the shop front to accommodate new entrance doors to each new dwelling and replacement of the existing first and second floor windows with sash style double-glazed units, the façade of the building is not being significantly changed and will be sympathetically cleaned and repaired.

The proposed development will provide much needed additional residential accommodation in the town centre, making use of space which would otherwise be of limited benefit (void space above the retail unit). The two dwellings created will provide adequate family accommodation.

The proposal is not considered to result in any loss of light or privacy given its position, and the nature of the surrounding occupiers. No significant alteration of the building is proposed. The site is in Central Reading with easy access to nearby public amenities and therefore the proposed dwellings would not benefit from any private amenity space, consistent with similar developments in the town centre.

The flat lobbies have been redesigned to incorporate both bin/ recycling storage and internal cycle storage.

d) Access Statement

Access to the property for disabled persons and emergency vehicles will remain as presently exists. No alteration of the pedestrian or vehicular accesses is proposed.

The proposal will not therefore adversely affect access to the property and is considered to be acceptable.

Means of escape from the proposed new dwelling units will be provided by a protected enclosure to the staircase leading from each room to the final exit doors on the front elevation. The proposal will comply with Building Regulations relating to protection of the building elements from fire and means of escape.

This proposal seeks to improve the means of escape provisions from those shown on the previously approved scheme which showed escape from the bedrooms through the living room rather than by a protected staircase.

The site is located within easy reach of local transport facilities, including both bus and rail services. As the building occupies the entire site, there is no space for on-site parking. The Council has previously determined that given the site's location in the town centre, private parking is not required.

e) Biodiversity Statement

As the proposed development consists of the conversion of an existing property in an urban context, and with no development extending beyond the existing footprint it is considered that it will not adversely affect the biodiversity of the surrounding area.

f) Air Quality Statement

The Air Quality Assessment prepared by Accon UK Environmental Consultants dated 27 June 2024 considers whether the proposed development achieves compliance with the National Air Quality Objectives, along with national and local planning policy.

In their assessment, Accon UK conclude that the proposed development will not be adversely affected by air quality and therefore the proposal complies with national and local objectives and policies.

A copy of the Air Quality Assessment is attached to this statement.

g) Noise Statement

A Noise Assessment prepared by Auricl Acoustic Consulting in 16 July 2024. A copy of the Noise Assessment is attached to this statement.

The report indicates that sound insulation performance of the façade construction is such that the Council's ambient noise requirements can be achieved in the rooms of the proposed dwellings facing Friar street through the use of replacement window units incorporating windows with suitable replacement glazing to achieve R_w35 dB for living rooms and R_w39 dB for bedrooms.

When tested assuming a 13dB reduction via an open window the readings exceeded Reading Borough Councils requirements. However, they can be achieved with the incorporated Mechanical Ventilation and Heat Recovery Units (MVHR) fitted to each room (Envirovent Slimline 150 system).

The floor separating the retail units from the residential accommodation will be upgraded to incorporate an acoustic ceiling to achieve so as to be capable of achieving airborne sound insulation of greater than 50 dB DnT,w + Ctr, which is a 5 dB improvement over the standard specified in Approved Document E of the Building Regulations (detailed makeup of floor structure is detailed in the report). Based on this construction the predicted level of noise break-out into the proposed residential units from the commercial unit has been assessed and is predicted to be less than the BS 8233: 2014 desirable daytime internal noise limit for residential dwellings.

h) <u>Sustainability Statement</u>

The proposal has been carefully considered to ensure longevity and sustainability throughout the lifecycle of the building and lower costs-in-use for the occupants. The proposal will therefore incorporate the following aspects;

- Double-glazed windows.
- MVHR system.
- Internal insulation to existing solid walls.
- Enhanced insulation in the roof void to exceed Building Regulation U-value requirements of 0.16W m^2K.
- Adoption of energy-efficient lighting.
- Improve the air tightness of the building envelope by sealing leaky windows, gaps around vents and pipe penetrations.
- Installing water efficient sanitary and kitchen fittings.

To aid in the design process, an M&E services engineer has been appointed to provide expert advice and design for suitable systems that will ensure the property is served by efficient heating, cooling, and hot water.

The development will also comply with current Building Regulations and will therefore be sustainable and energy efficient.

To aid sustainability, occupiers will have either encouraged to walk, cycle or utilise public transport as no car parking spaces are available.

d) **Community Infrastructure Levy (CIL)**

A completed CIL form has been submitted as part of the planning application.

C SUMMARY

The proposal is consistent with the scheme previously approved in 2017 and provides substantially the same accommodation.

The application seeks to convert the original office/ residential accommodation on the upper floors into two new dwellings in a sustainable location, close to local amenities with good transport links. Externally, the new proposals are sympathetic to the design and proportions of the original façade. It retains the shop use at ground floor and basement level in conjunction with the majority of the original historic shopfront, thereby preserving the character and appearance of the area whilst providing a viable use for a currently empty building.

The proposed dwelling would be of a sufficient size and arrangement to provide adequate internal space for future residents and would not result in any undue amenity loss to neighbouring properties.

It is therefore respectfully requested that planning permission be granted for the proposed development.

D APPENDICES

Air Quality Assessment prepared by Accon UK Environmental Consultants

Noise Assessment prepared by Auricl Acoustic Consulting

Air Quality Assessment prepared by Accon UK Environmental Consultants

accon UK
ENVIRONMENTAL CONSULTANTS

Report for:

Ms Kanjana Phongtintongngam & Ms Angkana Fisher

90 – 91 Friar Street, Reading

Air Quality Assessment

Status: Final **Date: 27.06.2024**

Author	Henry Robins Air Quality Consultant
Reviewed and Approved By	Graham Parry Managing Director
Report For	Ms Kanjana Phongtintongngam & Ms Angkana Fisher 7 Winnersh Gate, Winnersh, Wokingham, RG41 5PL
Date	27.06.2024
Version Number	A5207/AQ/01
Status	Final

This report has been prepared by ACCON UK Limited with all reasonable care and diligence within the terms of the contract with the client. We disclaim any responsibility to the client and others in respect of any matters outside the scope of the above. We accept no responsibility to third parties to whom this report, or any part, thereof is made available. Any such party relies upon the report at their own risk.

Contents

1. Introduction 5
2. Air Pollution Policy Context 6
2.1. Legislation 6
2.2. Clean Air Strategy 8
2.3. The Environment Act 2021 9
2.4. The National Planning Policy Framework 10
2.5. Local Planning Policy – Reading Borough Local Plan (Adopted November 2019) 12
3. Site Description and Baseline Conditions 14
3.1. Site Description 14
3.2. Air Quality Review and Assessment 14
3.3. Local Air Quality Monitoring 15
3.4. Background Concentration of Air Pollutants 15
4. Methodology of Assessment and assessment criteria 16
4.1. Methodology 16
4.2. Breeze Roads Modelling of Pollutant Concentrations 16
4.3. Model Set-up Parameters 16
4.4. Assessment Criteria 17
4.5. Operational Phase 17
4.6. Traffic Data 17
4.7. Validation and Verification of the Model 19
5. Impacts and Constraints of Air quality 20
5.1. Operational Impact Assessment 20
6. Mitigation 22
6.1. Operation Phase 22
7. Conclusions 23
Appendices 24
Appendix 1: Glossary of Terms 25
Appendix 2: Air Quality Standards 26
Appendix 3: 2022 Heathrow Airport 27
Appendix 4: Proposed Development Receptors – First Floor 28

List of Tables

Table 2.1: UK Air Quality Objectives for NO_2, PM_{10} and $PM_{2.5}$ 7

Table 2.2 Examples of where AQS should be applied 8

Table 3.1: Local Monitoring Data Suitable for Model Verification 15

Table 3.2: Background Concentrations of Pollutants 15

Table 4.1: 2022 Traffic Flow Data for Verification 18

Table 4.2: 2025 Opening Year Traffic Flow Data 18

Table 4.3: NO_2 Annual Mean Verification for 2022 19

Table 5.1: Modelled 2025 NO_2 Concentrations – Development Receptors 20

Table 5.2: Modelled 2025 PM_{10} and $PM_{2.5}$ Concentrations – Development Receptors 21

1. INTRODUCTION

ACCON UK Limited (ACCON) has been commissioned by Oakleaf Building Surveyors on behalf of Ms Kanjana Phongtintongngam & Ms Angkana Fisher to carry out an Air Quality Assessment for the proposed development at 90 – 91 Friar Street, Reading, RG1 1El.

The proposed development is for the change of use from shop (class E) to dwelling houses (class C3) to the first and second floor to form 2 No. 2-bedroom dwelling units (maisonettes) and associated alterations to the shop front.

The site is located within the administrative boundary of Reading Borough Council (RBC) and is within the Reading Air Quality Management Area which was declared in 2009 for NO_2.

This assessment has been completed in order to determine whether the proposed development achieves compliance against the National Air Quality Objectives (NAQOs), along with National and Local Planning Policy. The assessment has been undertaken in accordance with the Department for Environment, Food and Rural Affairs' (DEFRA) current Technical Guidance on Local Air Quality Management (LAQM.TG22.)[1] and considers the effects of local air quality on the development.

The report assesses the overall pollutant concentrations of nitrogen dioxide (NO_2) and particulates (PM_{10} and $PM_{2.5}$) at the proposed development site. A glossary of terms is detailed in **Appendix 1** and the location of the site is shown in **Section 3.1**. The development plan for the site with development receptor locations is identified in **Appendix 4**. It is estimated that the proposed development would be completed and occupied in 2025 (at the earliest), subject to receiving planning approval.

The potential air quality constraints on the development have been assessed on the basis of the findings of detailed dispersion modelling using Breeze Roads GIS Pro Version 5.1.8, which has been undertaken in the context of relevant NAQOs, emission limit values and relevant guidance.

[1] DEFRA, Local Air Quality Management Technical Guidance 2021.

Email: enquiry@accon-uk.com ●www.accon-uk.com
Unit B, Fronds Park, Frouds Lane, Aldermaston, Reading, RG7 4LH

Reading Office Tel: 0118 971 0000 Fax: 0118 971 2272
Brighton Office Tel: 01273 573 814

2. AIR POLLUTION POLICY CONTEXT

2.1. Legislation

2.1.1. Air Quality Strategy and Local Air Quality Management (LAQM)

Part IV of the Environment Act 1995 requires the Secretary of State to publish an air quality strategy and local authorities to review and assess the quality of air within their boundaries.[2] The latter has become known as Local Air Quality Management (LAQM), which commenced in 1997, an instrument by which the Government's air quality objectives are to be achieved over a determined period of time.

The Air Quality Strategy for England, Scotland, Wales and Northern Ireland (Volume 1) provides the policy framework for local air quality management and assessment in the UK. It sets out air quality standards and objectives for key air pollutants which are designed to improve air quality and protect human health and the environment from the effects of pollution. For the purpose of the strategy, the terms are defined below:

- **standards** are the concentrations of pollutants in the atmosphere which can broadly be taken to achieve a certain level of environmental quality. The standards are based on assessment of the effects of each pollutant on human health including the effects on sensitive subgroups or on ecosystems
- **objectives** are policy targets often expressed as a maximum ambient concentration not to be exceeded, either without exception or with a permitted number of exceedances, within a specified timescale.

The air quality standards and objectives are outlined in **Appendix 2**.

As part of this LAQM role, Local Authorities are required to identify whether the objectives have been, or will be, achieved at relevant locations, by the applicable date. Where a local authority identifies areas of non-compliance with the Air Quality Objectives[3] of pollutants of concern, and there is relevant public exposure, there remains a statutory need to declare the geographic extent of non-compliance as an Air Quality Management Area (AQMA) and to draw up an action plan detailing appropriate measures and policies that can be introduced in order to work towards achieving the objective(s).

[2] In 1997, the United Kingdom National Air Quality Strategy (NAQS) was published in response to the Environment Act of 1995, setting out a framework of standards and objectives for the air pollutants of most concern (SO_2, PM_{10}, NOx, CO, lead, benzene, 1,3-butadiene and tropospheric ozone), to be achieved by local authorities through a system of Local Air Quality Management (LAQM) by 2005. The aim of the strategy was to reduce the air pollutant impact on human health by reducing airborne concentrations. A review of the NAQS led to the publication of Air Quality Strategy for England, Scotland, Wales and Northern Ireland in January 2000, whilst in July 2007 was further reviewed with various amendments to the Air Quality Objectives for local authorities.
[3] Defra, 2022, Local Air Quality Management Technical Guidance (TG22)

Email: enquiry@accon-uk.com ●www.accon-uk.com
Unit B, Fronds Park, Frouds Lane, Aldermaston, Reading, RG7 4LH

Reading Office Tel: 0118 971 0000 Fax: 0118 971 2272
Brighton Office Tel: 01273 573 814

The objectives for use by Local Authorities are prescribed within the Air Quality (England) Regulations 2000[4], and the Air Quality (England) (Amendment) Regulations 2002[5]. The AQOs for pollutants included within the Air Quality Strategy and assessed as part of the scope of this report are summarised in **Table 2.1**. The objectives for NO_2 and PM_{10} were to have been achieved by 2005 and 2004 respectively and continue to apply in all future years thereafter. The $PM_{2.5}$ objective is to be achieved by 2020. It should be noted that Local Authorities in England have a flexible role in working towards reducing emissions and concentrations of $PM_{2.5}$.

Table 2.1: UK Air Quality Objectives for NO_2, PM_{10} and $PM_{2.5}$

Pollutant	Objectives	Averaging Period
Nitrogen dioxide (NO_2)	200µg/m^3 not to be exceeded more than 18 times a year	1-hour mean
	40µg/m^3	Annual mean
Particulate Matter (PM_{10})	50µg/m^3 not to be exceeded more than 35 times a year	24-hour mean
	40µg/m^3	Annual mean
Particulate Matter ($PM_{2.5}$)*	Work towards reducing emissions/ concentrations of fine particulate matter ($PM_{2.5}$)	Annual mean

*The $PM_{2.5}$ objective, which is to be met by 2020, is not in (Air Quality England) Regulations and there is no requirement for local authorities to assess it, although they are encouraged to do so.

The AQS objectives apply at locations where members of the public are likely to be regularly present and exposed over the averaging period of the objective. **Table 2.2** identifies examples of where the annual mean objectives should apply as provided in TG22[6], and include: building facades of residential properties[7], schools, hospitals, etc. The annual mean objectives are not relevant for the building facades of offices or other places of work where members of the public do not have regular access, kerbsides or gardens. The 24-hour mean objective applies to all locations where the annual mean objective would apply, together with hotels and gardens of residential properties. The 1-hour mean objective also applies at these locations as well as at any outdoor location where a member of the public might reasonably be expected to stay for 1-hour or more, such as shopping streets, parks and sports grounds, as well as bus stations and railway stations that are not fully enclosed.

[4] The Stationary Office (2000) Statutory Instrument 2000, The Air Quality (England) Regulations 2000, London
[5] The Stationary Office (2002) Statutory Instrument 2002, The Air Quality (England) (Amendment) Regulations 2002, London
[6] Such locations should represent parts of the garden where relevant public exposure is likely, for example where there are seating or play areas. It is unlikely that relevant public exposure would occur at the extremities of the garden boundary, or in front gardens, although local judgement should always be applied.
[7] Moorcroft and Barrowcliffe. et al. (2017) Land-use Planning & Development Control: Planning for Air Quality. v1.2. Institute of Air Quality Management, London.

Email: enquiry@accon-uk.com ●www.accon-uk.com
Unit B, Fronds Park, Frouds Lane, Aldermaston, Reading, RG7 4LH

Reading Office Tel: 0118 971 0000 Fax: 0118 971 2272
Brighton Office Tel: 01273 573 814

Table 2.2 Examples of where AQS should be applied

Averaging Period	AQS Should Apply	AQS Should Not Apply
Annual Mean	All locations where members of the public might be regularly exposed. Building facades of: • Residential properties* • Schools • Hospitals • Care homes etc.	Building facades of offices or other places of work where members of the public do not have regular access. • Hotels, unless people live there as their permanent residence. • Residential gardens • Kerbside sites or any other location where public exposure is expected to be short term.
24-hour and 8-hour mean	All locations where the annual mean objective would apply. • Hotels • Residential gardens	Kerbside sites or any other location where public exposure is expected to be short term.
1-hour mean	All locations where the annual mean and 24 and 8-hour mean objectives apply. • Kerbside sites (e.g. pavements of busy shopping streets) • Those parts of car parks, bus stations and railway stations etc which are not fully enclosed, where members of the public might spend one hour or more. • Any outdoor locations where members of the public might spend one hour or longer.	Kerbside sites where the public would not be expected to have regular access.
15-min mean	All locations where members of the public might reasonably be exposed for a period of 15 minutes or longer.	

*Such locations should represent parts of the garden where relevant public exposure is likely, for example where there are seating or play areas. It is unlikely that relevant public exposure would occur at the extremities of the garden boundary, or in front gardens, although local adjustment should always be applied.

2.2. Clean Air Strategy

The Clean Air Strategy 2019[8] was released in January 2019 and supersedes the policies featured in The National Air Quality Strategy. The strategy mainly deals with how to improve air quality in England but also discusses air quality policy in the devolved administrations. In comparison with the previous strategies, it has a more joined-up approach, incorporating transport, domestic, industrial and agricultural emission reduction policies with a combined focus on both ambient and indoor air quality. The plan also has an emphasis on the proposal to use Clean Air Zones (CAZs) and the ULEZ

[8] DEFRA, 2019, The Clean Air Strategy 2019

Email: enquiry@accon-uk.com ●www.accon-uk.com
Unit B, Fronds Park, Frouds Lane, Aldermaston, Reading, RG7 4LH

Reading Office Tel: 0118 971 0000 Fax: 0118 971 2272
Brighton Office Tel: 01273 573 814

(in London) to quickly bring highly polluted urban centres below the legal limits. Some of the key policies in the plan are a renewed consideration of under-used Smoke Control Areas due to the growth of highly polluting domestic wood burning stoves, new best practices being incorporated into the agricultural sector to reduce ammonia emissions (and their associated secondary particulates) and with a policy to prohibit the sale of new petrol and diesel cars by 2040. However, air quality objective limits outlined in the document are largely unchanged from the previous strategy.

2.3. The Environment Act 2021

The Environment Act 2021 establishes a legally binding duty on government to bring forward at least two new air quality targets in secondary legislation by 31 October 2022. This duty sits within the environmental targets framework outlined in the Environment Act (Part 1).

The proposed air quality targets are:

- *Annual Mean Concentration Target ('concentration target') - a maximum concentration of 10µg/m^3 to be met across England by 2040*
- *Population Exposure Reduction Target ('exposure target') - a 35% reduction in population exposure by 2040 (compared to a base year of 2018).*

The amendments to the Environment Act 1995 made through the Bill will:

- *Strengthen the local air quality management (LAQM) framework to enable greater cooperation at local level and broaden the range of organisations that play a role in improving local air quality. Responsibility for tackling local air pollution will now be shared with designated relevant public authorities, all tiers of local government and neighbouring authorities.*
- *Increase transparency and accountability by requiring the Secretary of State to regularly review the Air Quality Strategy at least every 5 years, and to publish an annual statement to Parliament on progress towards achieving air quality standards and objectives.*

The amendments to the Clean Air Act 1993 made through the Bill will help local authorities reduce pollution from domestic burning, which contributed 38% of $PM_{2.5}$ emissions in 2019. Specifically, the amendments will:

- *Replace the criminal offence of emitting smoke from a chimney in a smoke control area with a civil penalty regime, which allows for the removal of the statutory defences that currently hinder enforcement. This will enable quicker, simpler and more proportionate enforcement at a local level against the emissions of smoke within a smoke control area (SCA).*
- *Give local authorities powers to address pollution from solid fuel burning on inland waterway vessels (for example, canal boats) in smoke control areas.*
- *Strengthen the offences in relation to the sale and acquisition of certain solid fuels for use in smoke control areas, by removing the limit on the fine for delivering unapproved solid fuels*

Email: enquiry@accon-uk.com ●www.accon-uk.com
Unit B, Fronds Park, Frouds Lane, Aldermaston, Reading, RG7 4LH

Reading Office Tel: 0118 971 0000 Fax: 0118 971 2272
Brighton Office Tel: 01273 573 814

to a building in a smoke control area, and requiring retailers of solid fuels to notify customers that that it is illegal to buy unapproved fuel for use in a smoke control area unless burning in an approved appliance.

- *Amendments to the Environmental Protection Act 1990 allow local authorities to take more substantive action against those who repeatedly emit smoke and endanger human health by extending the system of statutory nuisance to private dwellings in SCAs. Smoke from chimneys that causes a nuisance could result in a local authority issuing an abatement notice. Breaching such a notice is a criminal offence and could result in the payment of fine, as is already the case outside SCAs.*

2.4. The National Planning Policy Framework

The National Planning Policy Framework (NPPF) was first published on 27th March 2012 and updated on 24th July 2018, 19th February 2019, 20th July 2021, 5th September 2023 and 20th December 2023. The policy sets out the government's planning policies for England and how these are expected to be applied.

The NPPF[9] "sets out the Government's planning policies for England and how these should be applied and provides a framework within which locally-prepared plans for housing and other development can be produced." It includes advice on when air quality should be a material consideration in development control decisions. Relevant sections are set out below:

Section 9 - Promoting sustainable transport:

Paragraph 109

"The planning system should actively manage patterns of growth in support of these objectives. Significant development should be focused on locations which are or can be made sustainable, through limiting the need to travel and offering a genuine choice of transport modes. This can help to reduce congestion and emissions, and improve air quality and public health. However, opportunities to maximise sustainable transport solutions will vary between urban and rural areas, and this should be taken into account in both plan-making and decision-making..."

Section 15 - Conserving and enhancing the natural environment:

Paragraph 180 Bullet point 'e':

"Planning policies and decisions should contribute to and enhance the natural and local environment by:

(e) preventing new and existing development from contributing to, being put at unacceptable risk from, or being adversely affected by, unacceptable levels of soil, air, water or noise pollution or land instability. Development should, wherever possible, help to improve local environmental

[9] Ministry of Housing, Communities and Local Government, 2019, National Planning Policy Framework

Email: enquiry@accon-uk.com ●www.accon-uk.com
Unit B, Fronds Park, Frouds Lane, Aldermaston, Reading, RG7 4LH

Reading Office Tel: 0118 971 0000 Fax: 0118 971 2272
Brighton Office Tel: 01273 573 814

conditions such as air and water quality, taking into account relevant information such as river basin management plans; and

Paragraph 192:

"Planning policies and decisions should sustain and contribute towards compliance with relevant limit values or national objectives for pollutants, taking into account the presence of Air Quality Management Areas and Clean Air Zones, and the cumulative impacts from individual sites in local areas. Opportunities to improve air quality or mitigate impacts should be identified, such as through traffic and travel management, and green infrastructure provision and enhancement. So far as possible these opportunities should be considered at the plan-making stage, to ensure a strategic approach and limit the need for issues to be reconsidered when determining individual applications. Planning decisions should ensure that any new development in Air Quality Management Areas and Clean Air Zones is consistent with the local air quality action plan."

The NPPF is accompanied by relevant planning practice guidance (PPG)[10], a web-based resource which brings together planning guidance on various topics into one place. Specific guidance in respect to air quality is provided where the guiding principles on how planning can take account of the impact of new development on air quality is included. The PPG states that:

"Whether air quality is relevant to a planning decision will depend on the proposed development and its location. Concerns could arise if the development is likely to have an adverse effect on air quality in areas where it is already known to be poor, particularly if it could affect the implementation of air quality strategies and action plans and/or breach legal obligations (including those relating to the conservation of habitats and species). Air quality may also be a material consideration if the proposed development would be particularly sensitive to poor air quality in its vicinity."

The PPG sets out the information that has to be considered when deciding whether an air quality assessment may be required for a planning application, stating that:

Where air quality is a relevant consideration the local planning authority may need to establish:

- *the 'baseline' local air quality, including what would happen to air quality in the absence of the development;*
- *whether the proposed development could significantly change air quality during the construction and operational phases (and the consequences of this for public health and biodiversity); and*
- *whether occupiers or users of the development could experience poor living conditions or health due to poor air quality.*

It also provides guidance on options for mitigating air quality impacts, and makes clear that:

[10] GOV.UK. (2014). Air quality. [online] Available at: https://www.gov.uk/guidance/air-quality--3 [Accessed 07 October 2020].

Email: enquiry@accon-uk.com ●www.accon-uk.com
Unit B, Fronds Park, Frouds Lane, Aldermaston, Reading, RG7 4LH

Reading Office Tel: 0118 971 0000 Fax: 0118 971 2272
Brighton Office Tel: 01273 573 814

"Mitigation options will need to be locationally specific, will depend on the proposed development and need to be proportionate to the likely impact. It is important that local planning authorities work with applicants to consider appropriate mitigation so as to ensure new development is appropriate for its location and unacceptable risks are prevented. Planning conditions and obligations can be used to secure mitigation where the relevant tests are met."

Examples of mitigation include:

- *maintaining adequate separation distances between sources of air pollution and receptors;*
- *using green infrastructure, in particular trees, where this can create a barrier or maintain separation between sources of pollution and receptors;*
- *appropriate means of filtration and ventilation;*
- *including infrastructure to promote modes of transport with a low impact on air quality (such as electric vehicle charging points);*
- *controlling dust and emissions from construction, operation and demolition; and*
- *contributing funding to measures, including those identified in air quality action plans and low emission strategies, designed to offset the impact on air quality arising from new development.*

2.5. Local Planning Policy – Reading Borough Local Plan (Adopted November 2019)

The Reading Borough Local Plan refers to Air Quality throughout its Local Plan. Policy EN15: Air Quality is the most relevant Policy to this assessment:

Development should have regard to the need to improve air quality and reduce the effects of poor air quality.

i. Development that would detrimentally affect air quality will not be permitted unless the effect is to be mitigated. The following criteria should be taken into account:

- *Whether the proposal, including when combined with the cumulative effect of other developments already permitted, would worsen air quality;*
- *Whether the development is within, or accessed via, an Air Quality Management Area; and*
- *Whether it can be demonstrated that a local worsening in air quality that would not detrimentally affect human health or the environment would be offset by an overall improvement in air quality, for instance through reduction in the need to travel.*

ii. Where a development would introduce sensitive uses (such as residential, schools and nurseries, hospitals, care facilities) into, or intensify such uses within, an Air Quality Management Area, detrimental effects on that use will be mitigated. Mitigation measures

Email: enquiry@accon-uk.com ●www.accon-uk.com
Unit B, Fronds Park, Frouds Lane, Aldermaston, Reading, RG7 4LH

Reading Office Tel: 0118 971 0000 Fax: 0118 971 2272
Brighton Office Tel: 01273 573 814

should be detailed in any planning application. If there are significant detrimental effects that cannot be mitigated, the application should be refused.

iii. Where required, planning obligations will be used to secure contributions to measures to tackle poor air quality or for air quality monitoring

2.5.1. Relevant Guidance

2.5.2. Local Air Quality Management Technical Guidance (TG22)

The Technical Guidance "*Local Air Quality Management Technical Guidance (TG22)*" (LAQM.TG22) supersedes all previous versions. It is designed to support local authorities in carrying out their duties under the Environment Act 1995 as amended by the Environment Act 2021 and subsequent regulations. LAQM is the statutory process by which local authorities monitor, assess, and take action to improve local air quality.

2.5.3. Land-Use Planning & Development Control: Planning for Air Quality (IAQM, 2017)

This guidance[11] has been produced by Environmental Protection UK (EPUK) and the Institute of Air Quality Management (IAQM) to ensure that air quality is adequately considered in the land-use planning and development control process. This guidance, of itself, can have no formal or legal status and is not intended to replace other guidance that does have this status. This document has been developed for professionals operating within the planning system. It provides them with a means of reaching sound decisions, having regard to the air quality implications of development proposals. It also is anticipated that developers will be better able to understand what will make a proposal more likely to succeed. This guidance is particularly applicable to assessing the impacts of traffic and energy centre emissions and provides advice how to describe air quality impacts and their significance.

[11] Moorcroft and Barrowcliffe. et al. (2017) Land-use Planning & Development Control: Planning for Air Quality. v1.2. Institute of Air Quality Management, London.

Email: enquiry@accon-uk.com ●www.accon-uk.com
Unit B, Fronds Park, Frouds Lane, Aldermaston, Reading, RG7 4LH

Reading Office Tel: 0118 971 0000 Fax: 0118 971 2272
Brighton Office Tel: 01273 573 814

3. SITE DESCRIPTION AND BASELINE CONDITIONS

3.1. Site Description

The site is located on Friar Street and the A329 is located approx. 90m to the west of the site in a retained cutting.

The location and the red line boundary of the site are detailed below in **Figure 3.1**.

Figure 3.1: Site Location Plan

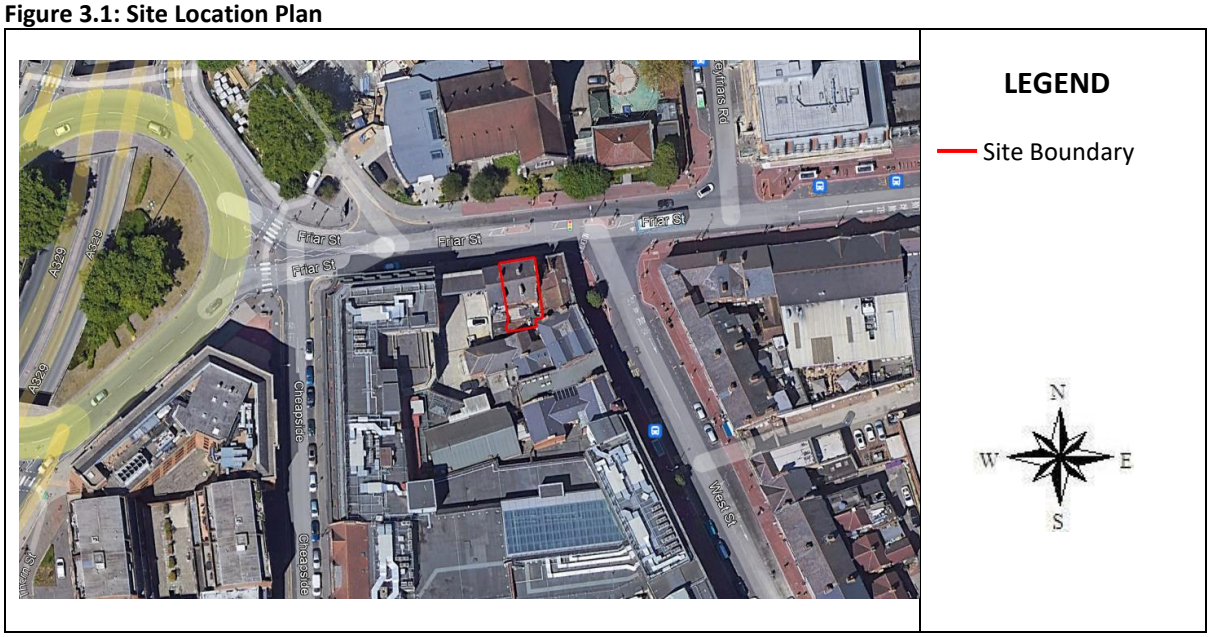

3.2. Air Quality Review and Assessment

As previously indicated, Local Authorities have been required to carry out a review of local air quality within their boundaries to assess areas that may fail to achieve the limit values. Where these objectives are unlikely to be achieved, local authorities must designate these areas as AQMA's and prepare a written action plan to achieve the AQS's.

The review of air quality takes on several prescribed stages, of which each stage is reported. RBC Air Quality Annual Status Report 2023[12] provides the most recent available air quality monitoring results for RBC (2022). Details of the monitoring data used for pollutant concentration model verification purposes are provided in **Section 3.3.**

[12] 2022 Air Quality Annual Status Report (ASR) for Reading Borough Council

Email: enquiry@accon-uk.com ●www.accon-uk.com
Unit B, Fronds Park, Frouds Lane, Aldermaston, Reading, RG7 4LH

Reading Office Tel: 0118 971 0000 Fax: 0118 971 2272
Brighton Office Tel: 01273 573 814

3.3. Local Air Quality Monitoring

LBTH monitors local air quality through an automatic monitor and diffusion tube monitoring network. The monitoring sites chosen for verification of the air quality modelling were diffusion tubes sites as there was publicly available traffic data for these sites.

The 2022 annual mean NO_2 concentrations for the monitoring sites are identified in **Table 3.1.** The annual mean NO_2 NAQO was exceeded at one of the monitoring sites and is identified in **Bold**. That Site fronts directly onto Caversham Road.

Table 3.1: Local Monitoring Data Suitable for Model Verification

Monitor Site Number	Grid Reference		2022 Annual Mean NO_2 (µg/m^3)	2022 Data Capture (%)
	X	Y		
Friar Street (Nandos)	471437	173589	38.0	100.0
21A Friars Walk, Friars Street	471373	173584	38.8	90.4
Sainsburys 52-55, Friar Street	471320	173577	37.6	100.0
Malcolm Place	471169	173869	**43.3**	100.0
128 Castle Hill	470987	173016	30.3	100.0
162a Castle Hill	470835	172992	26.3	100.0

3.4. Background Concentration of Air Pollutants

Background concentrations of air pollutants for the modelling were obtained from the DEFRA pollutant concentration maps[13]. **Table 3.2** identifies the background pollutant concentrations at the diffusion tube monitoring locations and the proposed development site. All of the estimated background concentrations for the annual mean NO_2 and PM_{10} used in the assessment are significantly below the annual mean objective limit of 40µg/m^3 in 2022 and 2025.

Table 3.2: Background Concentrations of Pollutants

Location and Year	NO_x µg/m^3	NO_2 µg/m^3	PM_{10} µg/m^3	$PM_{2.5}$ µg/m^3
Verification – Friar Street (Nandos), 21A Friars Walk, Sainsburys 52-55 and Malcolm Place - 2022 471500, 173500	55.31	32.02	17.77	12.62
Verification – Castle Hill 128 - 2022 470500, 173500	29.65	20.07	16.65	11.58
Verification – 162a Castle Hill - 2022 470500, 172500	23.43	16.60	15.69	10.95
Development Site - 2025 471500, 173500	51.77	30.43	16.97	11.92

Note: In 2025 the ratio between PM_{10} and $PM_{2.5}$ at the proposed Development Receptors is 0.70.

[13] DEFRA, *Background Mapping Data for Local Authorities- 2018* [online] Available at: https://uk-air.defra.gov.uk/data/laqm-background-maps?year=2018

Email: enquiry@accon-uk.com ●www.accon-uk.com
Unit B, Fronds Park, Frouds Lane, Aldermaston, Reading, RG7 4LH

Reading Office Tel: 0118 971 0000 Fax: 0118 971 2272
Brighton Office Tel: 01273 573 814

4. METHODOLOGY OF ASSESSMENT AND ASSESSMENT CRITERIA

4.1. Methodology

In the UK, DEFRA provides guidance on the most appropriate methods to estimate pollutant concentrations for use in Local Air Quality Management (LAQM). DEFRA regularly updates its Technical Guidance, with the latest LAQM Technical Guidance (TG22)[14] published in August 2022. The methodology in TG22 directs air quality professionals to a number of tools published by DEFRA to predict and manage air quality. For example, it is necessary to use the updated NO_x to NO_2 calculator to derive NO_2 concentrations from the NO_x outputs from Breeze Roads modelling. This is because NO_2 concentrations within the model are otherwise predicted using the CALINE4 NO_x to NO_2 conversion methodology, which should not be used within the model as current evidence shows that the proportion of primary NO_2 in vehicle exhausts has increased since the model was developed, which would affect the relationship between NO_x and NO_2 at roadside locations.

In order to determine the extent to which air quality issues will affect the development of the site, the study has considered the following:

- Any air quality measurements carried out in the area near the proposed development; and
- The most recent Air Quality Review and Assessment Reports from RBC.

4.2. Breeze Roads Modelling of Pollutant Concentrations

Dispersion modelling has been undertaken using Breeze Roads to determine air quality concentrations across the site. Breeze Roads is an air dispersion modelling software suite that predicts air quality impacts of carbon monoxide (CO), nitrogen dioxide, particulate matter (PM), and other inert pollutant concentrations from moving and idling motor vehicles at or alongside roadways and roadway intersections.

Breeze Roads can be used in conjunction with the MOBILE5, EMFAC emission models or other emissions data, to demonstrate compliance with the UK's National Air Quality Strategy. Breeze Roads predicts air pollutant concentrations near highways and arterial streets due to emissions from motor vehicles operating under free-flow conditions and idling vehicles. In addition, 1-hour and running 8-hour averages of CO or 24-hour and annual block averages of PM_{10} can be calculated.

4.3. Model Set-up Parameters

The most recent Emissions Factor Toolkit (EFT, version 12.0.1, December 2023) issued by DEFRA was used to derive emissions rates (in grams per kilometre) for vehicle movements along roads incorporated into the model.

Briefly, the changes between v.11.0 and 12.0.1 are as follows:

[14] DEFRA, 2022, Local Air quality Management Technical Guidance (TG22)

Email: enquiry@accon-uk.com ●www.accon-uk.com
Unit B, Fronds Park, Frouds Lane, Aldermaston, Reading, RG7 4LH

Reading Office Tel: 0118 971 0000 Fax: 0118 971 2272
Brighton Office Tel: 01273 573 814

- EFT 12.0.1 allows users to output emission up to 2050 for all areas: England (not London), London, Northern Ireland, Scotland and Wales.
    - Emissions outputs for the years 2031-2050 are provided in support of climate assessments and appraisals only. Where emissions are to be used after 2030 to inform air quality assessments, the appropriate caveats around the limitations of the analysis must be included to accompany the assessment.
- Use of the COPERT v5.6 NO_x and PM speed-based emissions factors, updated from COPERT v5.3, as taken from the European Environmental Agency (EEA) emission calculation tool.
- The emissions factors for PM non-exhaust emissions sources have been updated in line with information published in the EMEP/EEA Emissions Inventory Guidebook 2019.

Meteorological data from Heathrow Airport (2022) has been utilised for the dispersion modelling, which is considered representative of the development area, and the wind rose is shown in **Appendix 3**.

4.4. Assessment Criteria

A detailed assessment was considered appropriate for this proposed development with model results being verified against local monitoring data. This was undertaken using the detailed dispersion model Breeze Roads.

For the purposes of this assessment, the limit values assigned to individual pollutants as set out in the Air Quality Standards Regulations 2010 form the basis of the air quality assessment. The limit values are based on an assessment of the effects of each pollutant on public health. Therefore, they are a good indicator in assessing whether, under normal circumstances, the air quality in the vicinity of a development is likely to be detrimental to human health.

4.5. Operational Phase

The main pollutants of concern are generally considered to be NO_2 and PM_{10} for road traffic. The Breeze Roads methodology has been used for this assessment to predict the constraints on the Site.

For the assessment, the following scenarios were considered:

- 2022 Model Verification; and
- 2025 Future Assessment year.

4.6. Traffic Data

The Breeze Roads prediction model requires the user to provide various input data, including the Annual Average Daily Traffic (AADT) flow, the number of heavy-duty vehicles (HDVs), the distance of the road centreline from the receptors and vehicle speeds. The traffic information is detailed in **Table 4.1** and **Table 4.2** below for the verification and assessment scenarios.

Email: enquiry@accon-uk.com ●www.accon-uk.com
Unit B, Fronds Park, Frouds Lane, Aldermaston, Reading, RG7 4LH

Reading Office Tel: 0118 971 0000 Fax: 0118 971 2272
Brighton Office Tel: 01273 573 814

Table 4.1 identifies the traffic data for 2022 which was utilised for the verification. Traffic flow and vehicle split data were obtained from the DfT (2022). Vehicle speeds were based on speed estimations and were subsequently adjusted where it was deemed, they were not sufficiently accurate, e.g. at junctions, crossings, etc.

Table 4.1: 2022 Traffic Flow Data for Verification

Road	AADT	HDV%
Friar Street	4,805	34.9
Caversham Road	26,246	4.6
A329	43,882	3.6
Castle Hill	23,778	2.7

Note: This is a non-exhaustive summary of the road sections modelled and includes the sections that are likely to contribute the greatest emissions.

Table 4.2 identifies the estimated 2025 AADT traffic flows for roads near to the proposed development (for use in the constraints modelling).

Traffic data for the A329 was obtained from the DfT, traffic flows were factored up using a TEMPro growth factor of **1.026**, based on 2023 DfT traffic data.

There was no traffic data available from the DfT for Friar Street or Greyfriars Road and therefore traffic data was obtained from the Air Quality Assessment produced for the Station Hill development by Waterman Infrastructure & Environment Limited (Application No: 220607). Where appropriate the baseline 2018 traffic flows were factored up using a TEMPro growth factor of **1.099.**

The proposed development is not anticipated to produce any additional traffic movement per day.

Vehicle speeds were estimated based on local speed limits and traffic conditions and were reduced near junctions and crossings to replicate possible queuing traffic.

Table 4.2: 2025 Opening Year Traffic Flow Data

Road Section	AADT	HDV (%)
Caversham Road	27,384	4.5
A329	45,800	3.5
Friar Street	4,931	34.9
Greyfriars Road	6,544	7.9

Note: This is a non-exhaustive summary of the road sections modelled and includes the sections that are likely to contribute the greatest emissions to the development receptors.

Email: enquiry@accon-uk.com ●www.accon-uk.com
Unit B, Fronds Park, Frouds Lane, Aldermaston, Reading, RG7 4LH

Reading Office Tel: 0118 971 0000 Fax: 0118 971 2272
Brighton Office Tel: 01273 573 814

4.7. Validation and Verification of the Model

Model validation undertaken by the software developer will not have been carried out in the vicinity of the site being considered in this assessment. As a result, it is necessary to perform a comparison of the modelled results with local monitoring data at suitable locations where data is available. This verification process aims to minimise model uncertainty and systematic error by correcting modelled results by an adjustment factor to gain greater confidence in the final results. The verification was carried out in accordance with TG22. Suitable monitoring data for the purpose of verification is available for concentrations of NO_2 at the monitoring positions detailed in **Section 3.3**.

When the monitored and modelled results are compared as recommended in TG22 the road NO_X adjustment factor is **4.4304** (as identified in **Table 4.3**). This factor was applied to all modelled NO_x results prior to calculating modelled NO_2 using the NO_x to NO_2 calculator. In the absence of appropriate PM_{10} monitoring within close proximity to the site, the NO_x adjustment factor has also been applied to the PM_{10} modelled concentrations, in accordance with the guidance provided in TG22.

Table 4.3: NO_2 Annual Mean Verification for 2022

Monitoring Position	Monitored		Modelled		% Difference (NO_x Roads) Before Adjustment	% Difference (NO_2 Total) After Adjustment	Road NO_X Factor
	Road NO_2 µg/m³	Road NO_X[15] µg/m³	Road NO_2 µg/m³	Road NO_X µg/m³			
Friar St (Nandos)	5.98	12.24	1.49	3.07	-74.94	1.68	**4.4304**
21A Friars Walk, Friars Street	6.78	13.93	1.83	3.67	-73.65	2.81	
Sainsburys 52-55 Friar Street	5.58	11.40	1.82	3.65	-67.97	6.01	
Malcolm Place	11.28	23.68	2.65	5.34	-77.43	0.00	
128 Castle Hill	10.23	20.22	2.39	4.55	-77.49	-0.10	
162a Castle Hill	9.70	18.83	2.28	4.28	-77.29	0.19	

[15] Obtained from NO_X to NO_2 Calculator Spreadsheet available from www.laqm.Defra.gov.uk

Email: enquiry@accon-uk.com ●www.accon-uk.com
Unit B, Fronds Park, Frouds Lane, Aldermaston, Reading, RG7 4LH

Reading Office Tel: 0118 971 0000 Fax: 0118 971 2272
Brighton Office Tel: 01273 573 814

5. IMPACTS AND CONSTRAINTS OF AIR QUALITY

5.1. Operational Impact Assessment

The proposed development is for the change of use from shop (class E) to dwelling houses (class C3) to the first and second floor to form 2 No. 2-bedroom dwelling units (maisonettes) and associated alterations to the shop front.

As the development is not predicted to produce any significant additional traffic movements it is highly unlikely that the development will have an impact on local traffic flows and air quality, as it will not create an increase in traffic of more than 100 AADT, which is the level below which detailed air quality assessments are not usually considered necessary.

5.1.1. Sensitive Receptors Identification

In order to characterise the air quality at the proposed development, predictions of air pollutant concentrations have been carried out for the earliest occupation year of 2025 using the Breeze Roads dispersion model and UK emission factors. Development receptors were modelled at the first floor of the proposed development as identified in **Appendix 4**. Higher floors were not modelled as the general trend for pollutant concentrations is to reduce with increasing height, therefore it was only deemed necessary to model pollutant concentrations at the first floor which is a worst-case scenario. The results of the predictions which include the road NO_X adjustment factor (**Table 4.3**) can be identified in **Tables 5.1** and **5.2**.

5.1.2. Air Quality Constraints – 2025 Annual Mean NO_2 Concentrations

Table 5.1 identifies the modelled NO_2 concentrations at the proposed sensitive receptors on the development site for the worst-case scenario for which there will be no exceedances of the AQO.

All of the pollutant concentrations will remain significantly below the annual NO_2 AQO. In respect of the NO_2 1-hour AQO, there is only a risk that the NO_2 1-hour objective (200µg/m^3) could be exceeded at local sensitive receptors if the annual mean NO_2 concentration is greater than 60µg/m^3. Therefore, exceedances of NO_2 1-hour AQO would not be expected as the worst-case annual mean predicted concentration is 36.7µg/m^3 (DR1).

Table 5.1: Modelled 2025 NO_2 Concentrations – Development Receptors

Receptor	Floor	Air Quality Objective (µg/m^3)	NO_2 Road Contribution (µg/m^3)	Total NO_2 (µg/m^3)
DR1	Ground	40	6.3	36.7
DR2			6.1	36.6
DR3			6.1	36.6
DR4			6.0	36.4
DR5			5.1	35.5

Email: enquiry@accon-uk.com ●www.accon-uk.com
Unit B, Fronds Park, Frouds Lane, Aldermaston, Reading, RG7 4LH

Reading Office Tel: 0118 971 0000 Fax: 0118 971 2272
Brighton Office Tel: 01273 573 814

Receptor	Floor	Air Quality Objective (µg/m³)	NO_2 Road Contribution (µg/m³)	Total NO_2 (µg/m³)
DR6			5.1	35.5
DR7			5.2	35.6
DR8			5.1	35.6

5.1.3. Air Quality Constraints – 2025 Annual Mean Particulate Matter Concentrations

Table 5.2 identifies the modelled PM_{10} and $PM_{2.5}$ concentrations in 2025. Modelled PM_{10} concentrations are predicted to be 18.3µg/m³ and modelled $PM_{2.5}$ concentrations are predicted to be 12.9µg /m³, which are significantly below the AQO's.

Table 5.2: Modelled 2025 PM_{10} and $PM_{2.5}$ Concentrations – Development Receptors

Receptor	Floor	PM_{10} Air Quality Objective (µg/m³)	Total PM_{10} µg/m³ (Days >50 µg/m³)	$PM_{2.5}$ Air Quality Objective (µg/m³)	Total $PM_{2.5}$ µg/m³
DR1	Ground	40	18.3 (2)	25	12.9
DR2			18.3 (2)		12.9
DR3			18.3 (2)		12.9
DR4			18.3 (2)		12.9
DR5			18.1 (2)		12.7
DR6			18.1 (1)		12.7
DR7			18.1 (2)		12.7
DR8			18.1 (1)		12.7

Email: enquiry@accon-uk.com ●www.accon-uk.com
Unit B, Fronds Park, Frouds Lane, Aldermaston, Reading, RG7 4LH

Reading Office Tel: 0118 971 0000 Fax: 0118 971 2272
Brighton Office Tel: 01273 573 814

6. MITIGATION

6.1. Operation Phase

As identified by the constraints assessment, there are no exceedances of the NAQO's for NO_2, PM_{10} or $PM_{2.5}$ at any of the proposed development receptors for the projected completion year of 2025. The highest modelled NO_2 and PM_{10} concentrations at sensitive development receptors are 36.7µg/m^3 and 18.3µg /m^3 respectively which are below the annual mean NO_2 and PM_{10} air quality objective values of 40µg/m^3.

Email: enquiry@accon-uk.com ●www.accon-uk.com
Unit B, Fronds Park, Frouds Lane, Aldermaston, Reading, RG7 4LH

Reading Office Tel: 0118 971 0000 Fax: 0118 971 2272
Brighton Office Tel: 01273 573 814

7. CONCLUSIONS

During the operation phase, the Breeze Roads modelling predicts that there will be no exceedances of the nitrogen dioxide or particulate matter objectives at the sensitive development receptors at the proposed development site.

During the operation phase, there will be no additional traffic on the local road network as a result of the development and therefore increases in nitrogen dioxide and particulate matter at existing sensitive receptors will not occur.

Email: enquiry@accon-uk.com ●www.accon-uk.com
Unit B, Fronds Park, Frouds Lane, Aldermaston, Reading, RG7 4LH

Reading Office Tel: 0118 971 0000 Fax: 0118 971 2272
Brighton Office Tel: 01273 573 814

APPENDICES

Email: enquiry@accon-uk.com ●www.accon-uk.com
Unit B, Fronds Park, Frouds Lane, Aldermaston, Reading, RG7 4LH

Reading Office Tel: 0118 971 0000 Fax: 0118 971 2272
Brighton Office Tel: 01273 573 814

Appendix 1: Glossary of Terms

AADT	Annual Average Daily Traffic
AAHT	Annual Average Hourly Traffic
AQMA	Air Quality Management Area - An area that a local authority has designated for action, based upon predicted exceedances of Air Quality Objectives.
AQS/ NAQOs	Air Quality Standard/ National Air Quality Objectives - The concentrations of pollutants in the atmosphere, which can broadly be taken to achieve a certain level of environmental quality. The standards are based on assessment of the effects of each pollutant on human health including the effects on sensitive sub groups.
AURN	Automatic Urban and Rural Network Air Quality Monitoring Site.
Calendar Year	The average of the concentrations measured for each pollutant for one year. In the case of the AQS this is for a calendar year.
Concentration	The amount of a (polluting) substance in a volume (of air), typically expressed as a mass of pollutant per unit volume of air (for example, micrograms per cubic metre, $\mu g/m^3$) or a volume of gaseous pollutant per unit volume of air (parts per million, ppm).
DEFRA	Department for Environment, Food and Rural Affairs
DfT	Department for Transport
EFT	Emissions Factor Toolkit
Exceedance	A period of time where the concentration of a pollutant is greater than the appropriate Air Quality Objective.
HDV	Heavy Duty Vehicle
HGV	Heavy Goods Vehicle
LAQM	Local Air Quality Management
Nitrogen Oxides	Nitric oxide (NO) is mainly derived from road transport emissions and other combustion processes such as the electricity supply industry. NO is not considered to be harmful to health. However, once released to the atmosphere, NO is usually very rapidly oxidised to nitrogen dioxide (NO_2), which is harmful to health. NO_2 and NO are both oxides of nitrogen and together are referred to as nitrogen oxides (NO_x).
PM_{10}/$PM_{2.5}$	Fine Particles are composed of a wide range of materials arising from a variety of sources including combustion sources (mainly road traffic), and coarse particles, suspended soils and dust from construction work. Particles are measured in a number of different size fractions according to their mean aerodynamic diameter. Most monitoring is currently focused on PM_{10} (less than 10 microns in aero-dynamic diameter), but the finer fractions such as $PM_{2.5}$ (less than 2.5 microns in aero-dynamic diameter) is becoming of increasing interest in terms of health effects.
TEMPro	TEMPro is software produced by the DfT to calculate the expected growth of traffic by year on roads throughout the country. The factor varies depending on the region and type of road.
$\mu g/m^3$	Micrograms per cubic metre of air - A measure of concentration in terms of mass per unit volume. A concentration of $1\mu g/m^3$ means that one cubic metre of air contains one microgram (millionth of a gram) of pollution.

Email: enquiry@accon-uk.com ●www.accon-uk.com
Unit B, Fronds Park, Frouds Lane, Aldermaston, Reading, RG7 4LH

Reading Office Tel: 0118 971 0000 Fax: 0118 971 2272
Brighton Office Tel: 01273 573 814

Appendix 2: Air Quality Standards

Pollutant	Averaging Period	Limit Value	Margin of Tolerance
Benzene	Calendar Year	5µg/m^3	
Carbon Monoxide	Maximum daily running 8 Hour Mean	10mg/m^3	
Lead	Calendar Year	0.5µg/m^3	100%
Nitrogen Dioxide	One Hour	200µg/m^3 Not to be exceeded more than 18 times per year	
	Calendar Year	40µg/m^3	
Particulates (PM_{10})	One day	50µg/m^3 Not to be exceeded more than 35 times per year	50%
	Calendar Year	40µg/m^3	20%
Particulates ($PM_{2.5}$)	Calendar Year	25µg/m^3	20%
Sulphur Dioxide	One Hour	350µg/m^3 Not to be exceeded more than 24 times per calendar year	150µg/m^3
	One Day	150µg/m^3 Not to be exceeded more than 3 times per calendar year	

Email: enquiry@accon-uk.com ●www.accon-uk.com
Unit B, Fronds Park, Frouds Lane, Aldermaston, Reading, RG7 4LH

Reading Office Tel: 0118 971 0000 Fax: 0118 971 2272
Brighton Office Tel: 01273 573 814

Appendix 3: 2022 Heathrow Airport

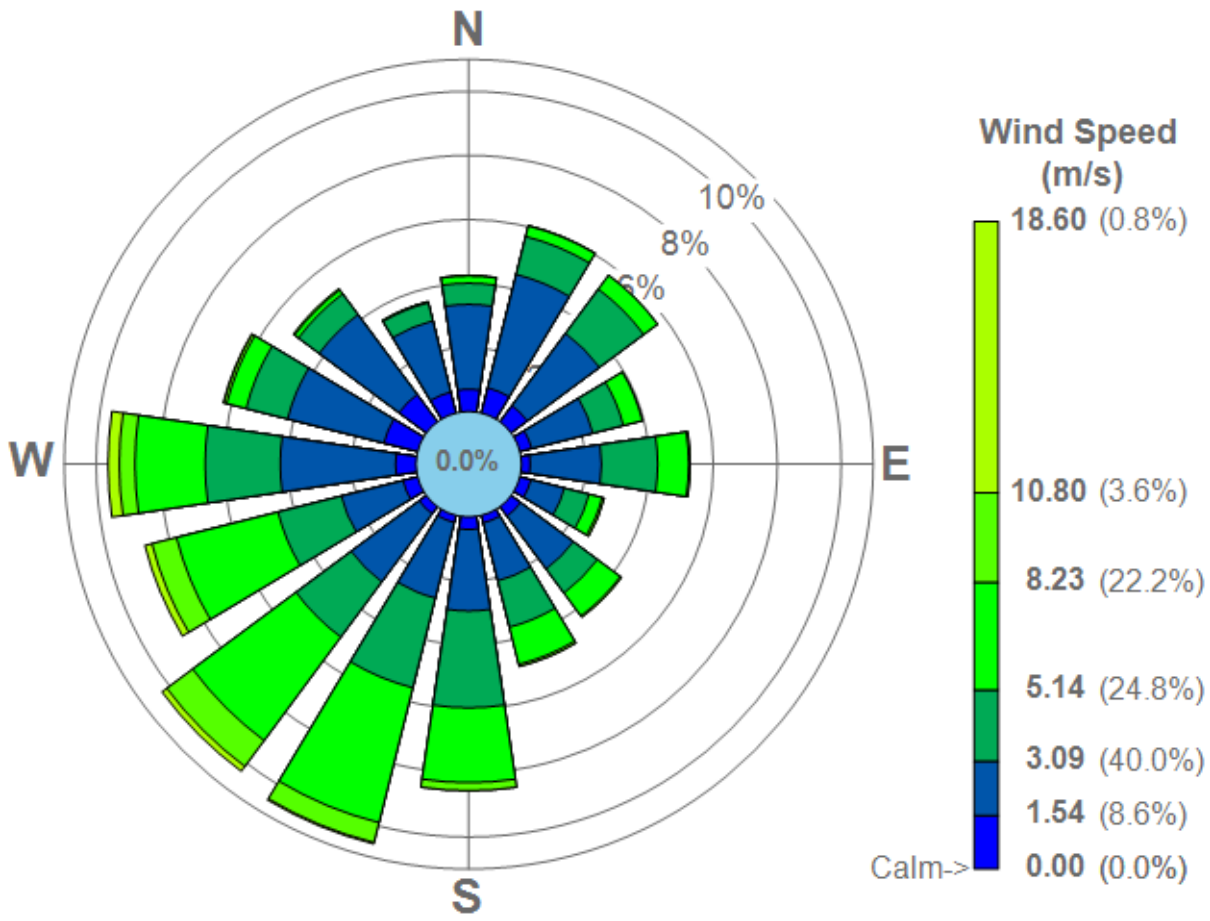

Email: enquiry@accon-uk.com ●www.accon-uk.com
Unit B, Fronds Park, Frouds Lane, Aldermaston, Reading, RG7 4LH

Reading Office Tel: 0118 971 0000 Fax: 0118 971 2272
Brighton Office Tel: 01273 573 814

Appendix 4: Proposed Development Receptors – First Floor

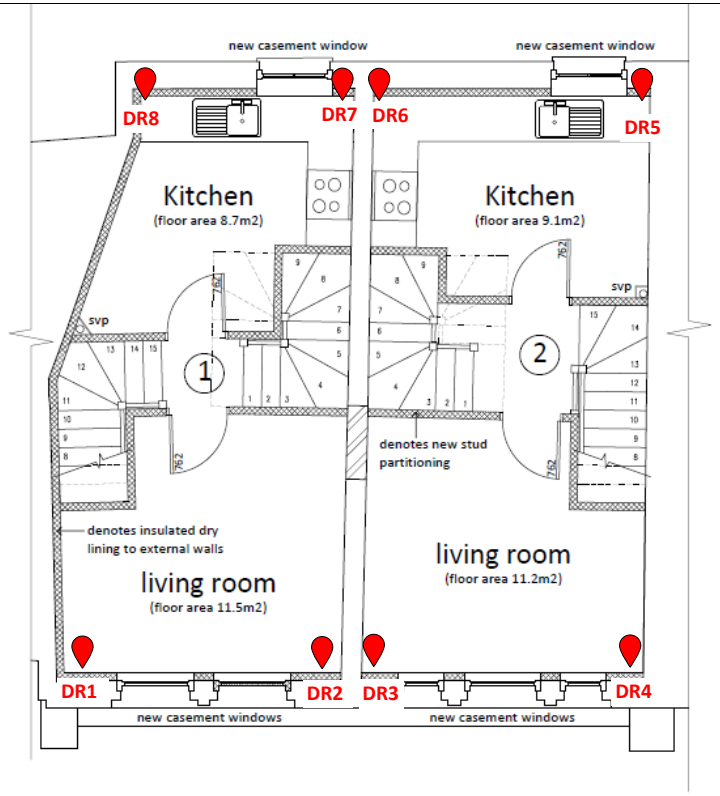

LEGEND

DR1 Development Receptor Location

Site Boundary

Client: Ms Kanjana Phongtintongngam & Ms Angkana Fisher		Proposed Development - Development Receptors – First Floor		Design:	HR
				Drawn:	HR
Rev: A	Description: FINAL	Project: 90 – 91 Friar Street, Reading		Checked:	GP
				Approved:	GP

Appendix 4

Scale: On Map

Email: enquiry@accon-uk.com ●www.accon-uk.com
Unit B, Fronds Park, Frouds Lane, Aldermaston, Reading, RG7 4LH

Reading Office Tel: 0118 971 0000 Fax: 0118 971 2272
Brighton Office Tel: 01273 573 814

Email: enquiry@accon-uk.com

Reading Office:
Unit B, Fronds Park,
Frouds Lane, Aldermaston,
Reading, RG7 4LH
Tel: 0118 971 0000 Fax: 0118 971 2272

Brighton Office:
Citibase, 95 Ditchling Road,
Brighton, East Sussex, BN1 4ST
Tel: 01273 573 814

www.accon-uk.com

accon UK
ENVIRONMENTAL CONSULTANTS

Noise Assessment prepared by Auricl Acoustic Consulting

auricl
acoustic consulting

90-91 Friar Street
Reading

Acoustic Report

16 July 2024

Contents

SUMMARY 2

1.0 INTRODUCTION 3

2.0 DESCRIPTION OF SITE AND PROPOSALS 3

3.0 READING BOROUGH COUNCIL REQUIREMENTS 4

4.0 NOISE SURVEY 4

4.1 Noise Survey Methodology 4

4.2 Noise Survey Results 6

4.3 Observations 6

5.0 EXTERNAL NOISE INTRUSION 6

5.1 External Noise Levels 7

5.2 External Façade Acoustic Requirements 7

5.3 Ventilation 7

6.0 INTERNAL SOUND INSULATION 8

APPENDIX A – ACOUSTIC TERMINOLOGY 10

APPENDIX B – TIME HISTORY GRAPHS 11

APPENDIX C – GLAZING DATASHEETS 13

SUMMARY

It is proposed to convert the upper floors of existing commercial property at 90-91 Friar Street in Reading to create new residential properties. For this type of project, Reading Borough Council typical requires an assessment of external noise levels and internal sound insulation to be undertaken.

A noise survey has been undertaken to determine noise levels affecting the site due to environmental noise.

The noise survey results have been assessed in relation to the Reading Borough Council internal noise level standards.

The proposed external façade constructions have been assessed against the requirements and concluded to be acceptable in relation to the Reading Borough Council internal noise level requirements.

The internal noise level limits are predicted to be exceeded with windows open, therefore mechanical ventilation will be required throughout the development.

Finally, the level of noise break-out into the proposed residential units from the commercial unit has been assessed and is predicted to be less than the BS 8233: 2014 desirable daytime internal noise limit for residential dwellings.

Project Number	14696	**Issue Date**	16 July 2024
Document Reference	R/A/1/240716	**Version**	01

Report Produced by	Nicholas Jones BEng(Hons) CEng MIOA	T: 07739 715411 E: njones@auricl.com
auricl Limited www.auricl.com hello@auricl.com	107 Cheapside **London** EC2V 6DN	1 Greyfriars Road **Reading** RG1 1NU

Registered Company 09824075

Copyright © auricl Limited 2024. All rights reserved. This report is confidential to the party to whom it is addressed and their professional advisers for the specific purpose to which it refers. No responsibility is accepted to third parties, and neither the whole nor any part of this report nor reference thereto may be published or disclosed without the written consent of auricl Limited.

1.0 Introduction

It is proposed to convert the upper floors of existing commercial property at 90-91 Friar Street in Reading to create new residential properties. For this type of project, Reading Borough Council typical requires an assessment of external noise levels and internal sound insulation to be undertaken.

The following report presents the methodology and results of an environmental noise survey carried out at the site and the subsequent assessments necessary to assess the potential impact of noise on the residential elements of the proposed development.

2.0 Description of Site and Proposals

The site is located on the southern side of Friar Street in central Reading and is currently occupied by a commercial building with an existing retail unit at ground floor level and office space on the upper floors. The area surrounding the site is a mix of commercial and residential properties.

Figure 2.1 shows the approximate existing site extent in **red** in relation to the surrounding area.

Figure 2.1 Existing Site Extent and Surroundings

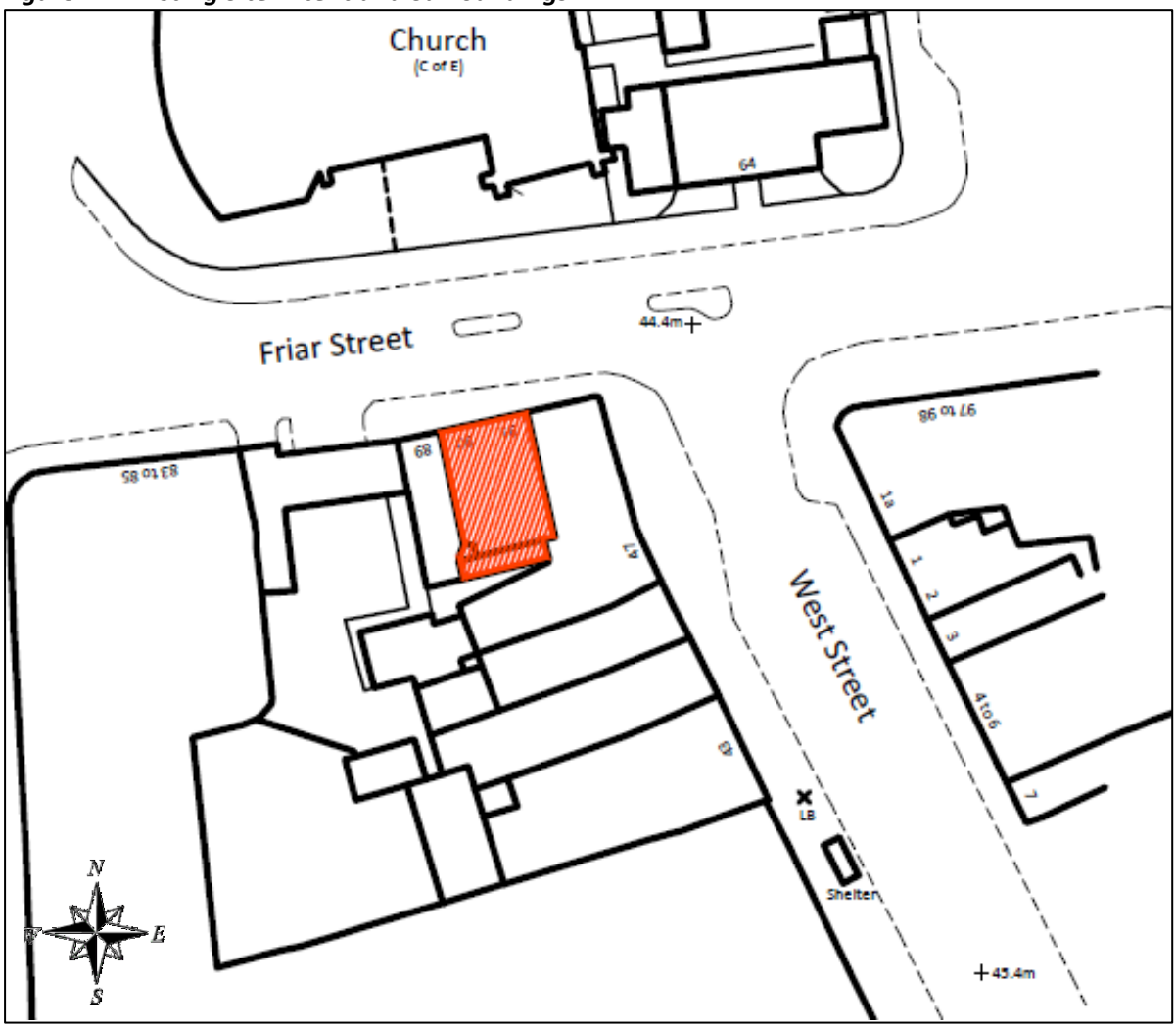

It is proposed to convert the upper floors of the building to create two duplex flats spanning first and second floor level.

3.0 Reading Borough Council Requirements

Reading Borough Council's typical requirements are as follows:

"*No development shall take place until a detailed scheme, informed by an assessment of the current noise environment, for protecting the dwellings from the external noise environment of the area has been submitted to and approved, in writing, by the Local Planning Authority. The scheme itself shall be designed, specified and constructed so that the sound insulation performance of the structure and the layout of the dwellings are such that the indoor ambient noise levels do not exceed the values detailed in Table 4 of BS 8233: 2014. Where opening windows will lead to an internal noise level increase of 5 dBA or greater above BS 8233: 2014 recommended internal levels, the scheme shall include provision of alternative mechanical ventilation with minimum performance equivalent to a mechanical heat recovery (MVHR) system with cool air bypass as an alternative means of cooling and ventilation. Noise from the system should not result in BS 8233 internal levels being exceeded.*"

British Standard (BS) 8233: 2014 "*Guidance on sound insulation and noise reduction for buildings*" is the industry standard for 'desirable' internal noise level standards for dwellings, as shown in Table 3.1.

Table 3.1 BS 8233 Desirable Internal Noise Levels

Activity	Location	07:00 to 23:00 (hours)	23:00 to 07:00 (hours)
Resting	Living room	35 dB $L_{Aeq,16hour}$	-
Dining	Dining room/area	40 dB $L_{Aeq,16hour}$	-
Sleeping (daytime resting)	Bedroom	35 dB $L_{Aeq,16hour}$	30 dB $L_{Aeq,8hour}$

The standard advises that the limits shown in Table 3.1 could be increased by 5 dB whilst still achieving 'reasonable' conditions.

In relation to individual noise events during night-time periods, the standard advises the following:

"*Regular individual noise events (for example, scheduled aircraft or passing trains) can cause sleep disturbance. A guideline value may be set in terms of SEL or $L_{Amax,\ F}$, depending on the character and number of events per night.*"

In relation to night-time maximum noise events, we have considered the World Health Organisation (WHO) document "*Guidelines for Community Noise*" (1999), which advises the following:

"For a good sleep, it is believed that indoor sound pressure levels should not exceed approximately 45dB L_{Amax} more than 10-15 times per night (Vallet & Vernet 1991)."

We have therefore considered the above standards in our noise survey methodology and noise assessment.

4.0 Noise Survey

4.1 Noise Survey Methodology

An unmanned environmental noise survey was undertaken over a 4-day period between Friday 5 July 2024 and Tuesday 9 July 2024.

The noise survey period was selected to determine typical noise levels affecting the proposed development site during the daytime and night-time, over weekday and weekend periods, when the proposed flats will be occupied.

The noise survey was undertaken at two measurement positions, indicated **purple** in on Figure 4.1 and described in Table 4.1.

Figure 4.1 Noise Measurement Positions

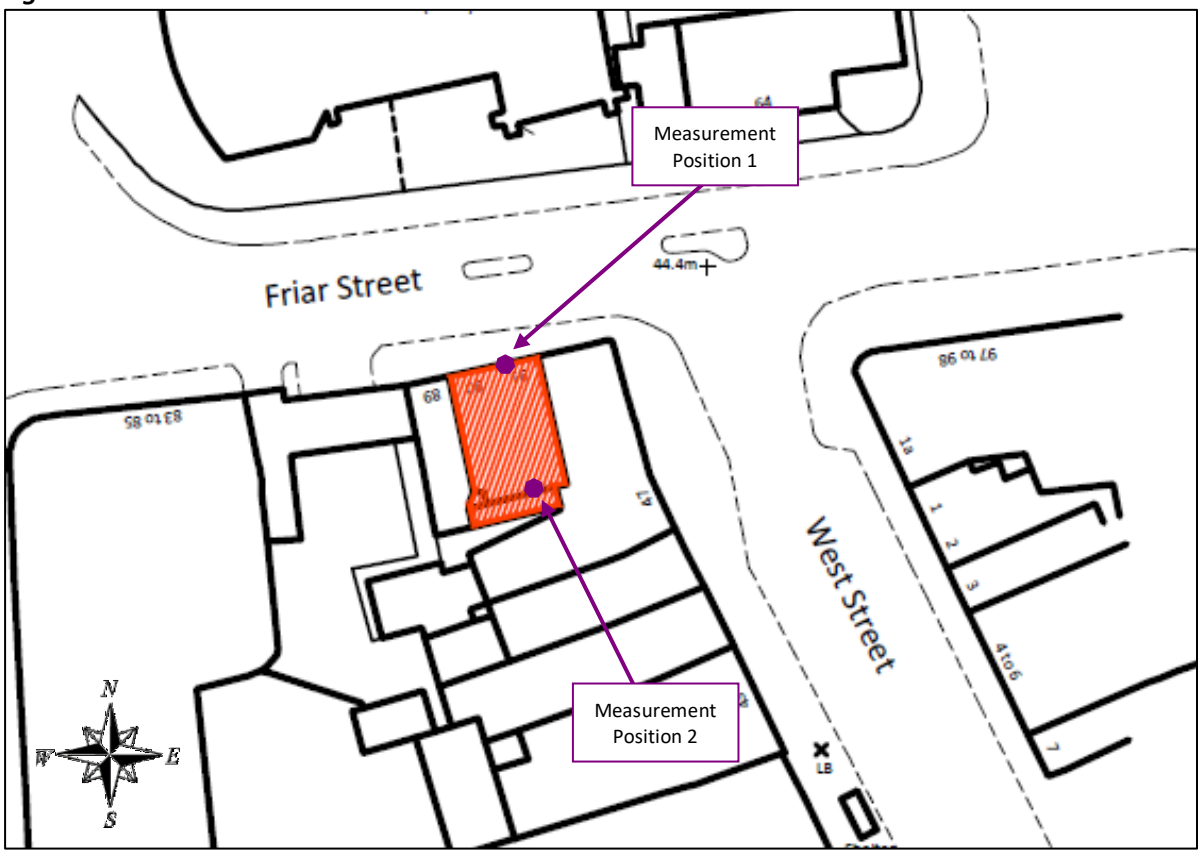

Table 4.1 Description of Measurement Positions

Measurement Position	Description
1	Protruding from a first-floor level window on the north/front façade of the site over Friar Street
2	Protruding from a first-floor level window on the south/rear façade of the site

The measurement positions were selected as being the most secure, accessible locations that were representative of noise levels affecting the front and rear building façades.

The equipment used for the noise survey is summarised in Table 4.2.

Table 4.2 Description of Equipment used for Noise Survey

Measurement Position	Item	Make & Model	Serial Number
1	Type 1 automated logging sound level meter	Norsonic 140	1405948
	Type 1 ½" microphone	Norsonic 1225	212903
2	Type 1 automated logging sound level meter	Norsonic 140	1403413
	Type 1 ½" microphone	GRAS 40AF	207390
Calibrator		Norsonic 1255	125525261

L_{Amax} and L_{Aeq} sound pressure levels were measured over contiguous 15-minute intervals throughout the noise survey period.

Due to the nature of the noise survey, i.e. unmanned, we are unable to comment on the weather conditions throughout the entire noise survey period. However, at the beginning of the survey period, conditions were dry with a clear sky and light wind. We understand these conditions were representative of the remainder of the survey period and are considered appropriate for undertaking environmental noise measurements.

The noise monitoring equipment was calibrated before and after the noise survey period. No significant change was found. Laboratory equipment calibration certificates can be provided upon request.

4.2 Noise Survey Results

Appendix B presents time history graphs showing the L_{Amax} and L_{Aeq} sound pressure levels measured at each position throughout the noise survey (shown as 15-minute periods).

As the measurement microphones were located approximately 1m from an existing façade, a correction of -3 dB has been applied to the measurement results at each position so as to replicate free-field conditions, in accordance with BS 8233: 2014.

We would consider the measured levels to be reasonable, taking into account the locations of the measurement positions and the dominant nearby noise sources.

4.3 Observations

At the beginning and end of the survey period, the daytime noise climate at measurement position 1 was noted to be dominated by road traffic using Friar Street to the north of the site. The noise climate at measurement position 2 at the rear of the site was noted to be affected by nearby building services plant serving other buildings.

5.0 External Noise Intrusion

This section presents our assessment of the measured external noise levels in relation to the Reading Borough Council requirements.

5.1 External Noise Levels

Based on the noise survey results, the worst-case external noise levels affecting the proposed residential facades are presented in Table 5.1.

Table 5.1 Noise Levels affecting Proposed Façades

Measurement Position / Façade	Daytime $L_{Aeq\ (16\ hour)}$ (dB)	Night-time $L_{Aeq\ (8\ hour)}$ (dB)	Night-time $L_{Amax\ (15\ minute)}$ (dB) (10th highest)
1 / Friar Street	64	60	78
2 / Rear	60	51	62

5.2 External Façade Acoustic Requirements

Our calculations indicate that the Reading Borough Council internal noise requirements should be achievable in the proposed residential dwellings facing Friar Street through the use of suitable replacement glazing.

The glazing to living rooms facing Friar Street shall be specified to achieve a laboratory sound insulation performance of at least R_w 35 dB, whilst the glazing to bedrooms in this façade should achieve at least R_w 39 dB.

The rear/eastern façade is screened from road traffic noise emanating from Friar Street, therefore glazing in this façade shall be specified to achieve a laboratory sound insulation performance of at least R_w 32 dB.

Appendix C at the rear of this report presents datasheets for the proposed glazing. It can be seen that the proposals are expected to achieve the above requirements.

Non-glazed façade areas are assumed to achieve at least R_w 52 dB. The external facades consist of brick/block cavity walls, which are expected to achieve this requirement.

5.3 Ventilation

Table 5.2 presents the predicted internal noise levels assuming a standard 13 dB reduction via an open window, in comparison with the Reading Borough Council requirements.

Table 5.2 Predicted Internal Noise Levels with Open Windows

Scenario	Friar Street		Rear Façade	
	Daytime $L_{Aeq\ (16\ hour)}$ (dB)	Night-time $L_{Aeq\ (8\ hour)}$ (dB)	Daytime $L_{Aeq\ (16\ hour)}$ (dB)	Night-time $L_{Aeq\ (8\ hour)}$ (dB)
Predicted Internal Noise Level	51	47	47	38
BS 8233: 2014 Limit + 5 dB	**40**	**35**	**40**	**35**

It can therefore be seen that the limits are predicted to be exceeded, therefore in accordance with the standard Reading Borough Council requirements, mechanical ventilation will be required.

Internal noise levels associated with the mechanical ventilation system shall be limited so as not to exceed the noise limits specified by BS 8233: 2014 for living rooms and bedrooms.

6.0 Internal Sound Insulation

As part of the proposals, acoustic upgrades will be applied to the existing floor separating the ground floor commercial use and the proposed first-floor dwellings.

As a minimum, the floor constructions shall be upgraded so as to be capable of achieving airborne sound insulation of greater than **50 dB $D_{nT,w}$ + C_{tr}**, which is a 5 dB improvement over the standard specified in Approved Document E of the Building Regulations.

The proposed floor construction separating the ground floor commercial use and proposed first-floor dwellings is as follows:

- 20mm floor finish
- 28mm Cellecta Screedboard 28 acoustic overlay board
- 21mm T&G wood flooring
- 19mm Gyproc Plank suspended between existing joists using Gypframe SIF floor channel system
- 200mm existing solid timber joists
- 100mm lightweight mineral wool acoustic insulation in floor void
- Separate solid timber joists to support acoustic ceiling
- 2 x 15mm Gyproc Soundbloc ceiling boards (25mm void between ceiling and existing floor joists

The acoustic ceiling is to be imperforate to maintain the sound insulation the floor construction, with any building services or cosmetic ceiling associated with the commercial unit suitably suspended below the acoustic ceiling.

Based on the above, we have undertaken noise break-out calculations based on worst-case noise levels previously measured by **auricl**, in a busy coffee shop (Pret A Manger) during its busy lunch hour. Our calculations are shown in Table 6.1.

Table 6.1 Commercial Noise Break-Out Calculations

Element	Octave Band Centre Frequency (Hz)								$L_{Aeq,T}$
	63	125	250	500	1k	2k	4k	8k	
Measured Internal Noise Level in a Worst-Case Coffee Shop (dB)	66	69	69	67	65	61	57	52	70
Sound Reduction of Separating Floor Construction (dB)	-35	-45	-47	-52	-55	-55	-55	-55	-
Correction for Typical Floor Area and Receive Room Absorption (dB)	+9	+10	+9	+9	+11	+12	+12	+12	-
Predicted Noise Break-Out Level (dB)	40	34	31	24	21	18	14	9	**28**

It can be seen that the predicted level of noise break-out into the proposed residential units is comfortably less than the BS 8233: 2014 desirable daytime internal noise limit for residential dwellings.

Appendix A – Acoustic Terminology

Parameter	Description
Decibel (dB)	A logarithmic scale representing the sound pressure or power level relative to the threshold of hearing ($20x10^{-6}$ Pascals).
Sound Pressure Level (L_p)	The sound pressure level is the sound pressure fluctuation caused by vibrating objects relative to the threshold of hearing.
A-weighting (L_A or dBA)	The sound level in dB with a filter applied to increase certain frequencies and decrease others to correspond with the average human response to sound.
L_{Amax}	The A-weighted maximum noise level measured during the measurement period.
$L_{Aeq,T}$	The A-weighted equivalent continuous noise level over the time period T (typically T= 16 hours for daytime periods, T = 8 hours for night-time periods). This is the sound level that is equivalent to the average energy of noise recorded over a given period.
$L_{A90\ (15\ min)}$	The noise level exceeded for 90% of the time (also referred to as the background noise level), measured over a 15-minute period
R_w	The weighted (w) sound reduction index (R), a single figure rating of the laboratory airborne sound insulation performance of a construction, usually measured across the frequency range 100-3150Hz. The higher the value, the greater the sound insulation, and the more onerous the requirement.
$D_{n,e,w}$	The weighted (w) element (e) normalised (n) level difference (D), a single figure indicator of the ability of a small building element (such as a trickle ventilator) to reduce sound. The higher the value, the greater the sound reduction, and vice versa.

Appendix B – Time History Graphs

Measurement Position 1

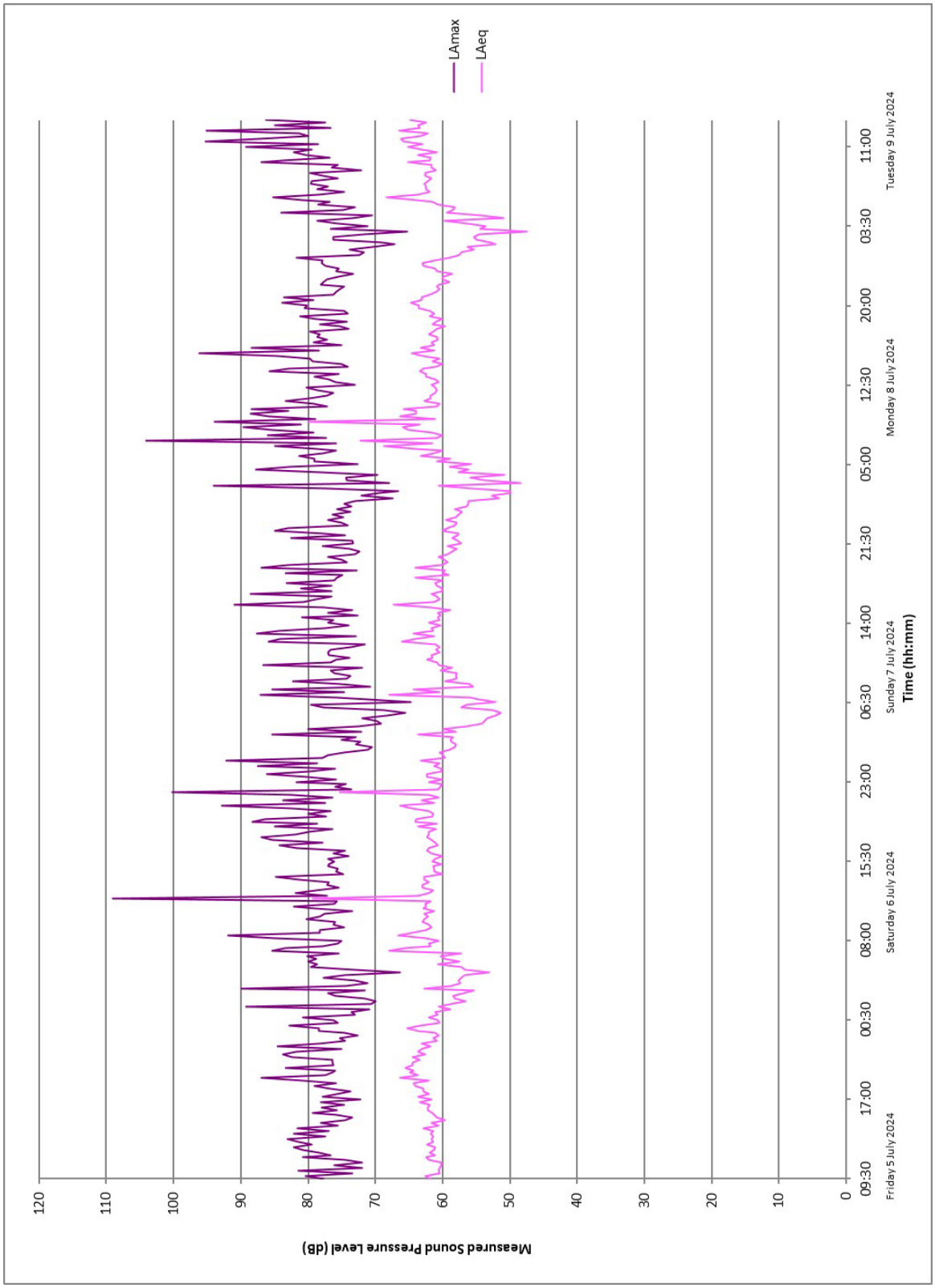

Measurement Position 2

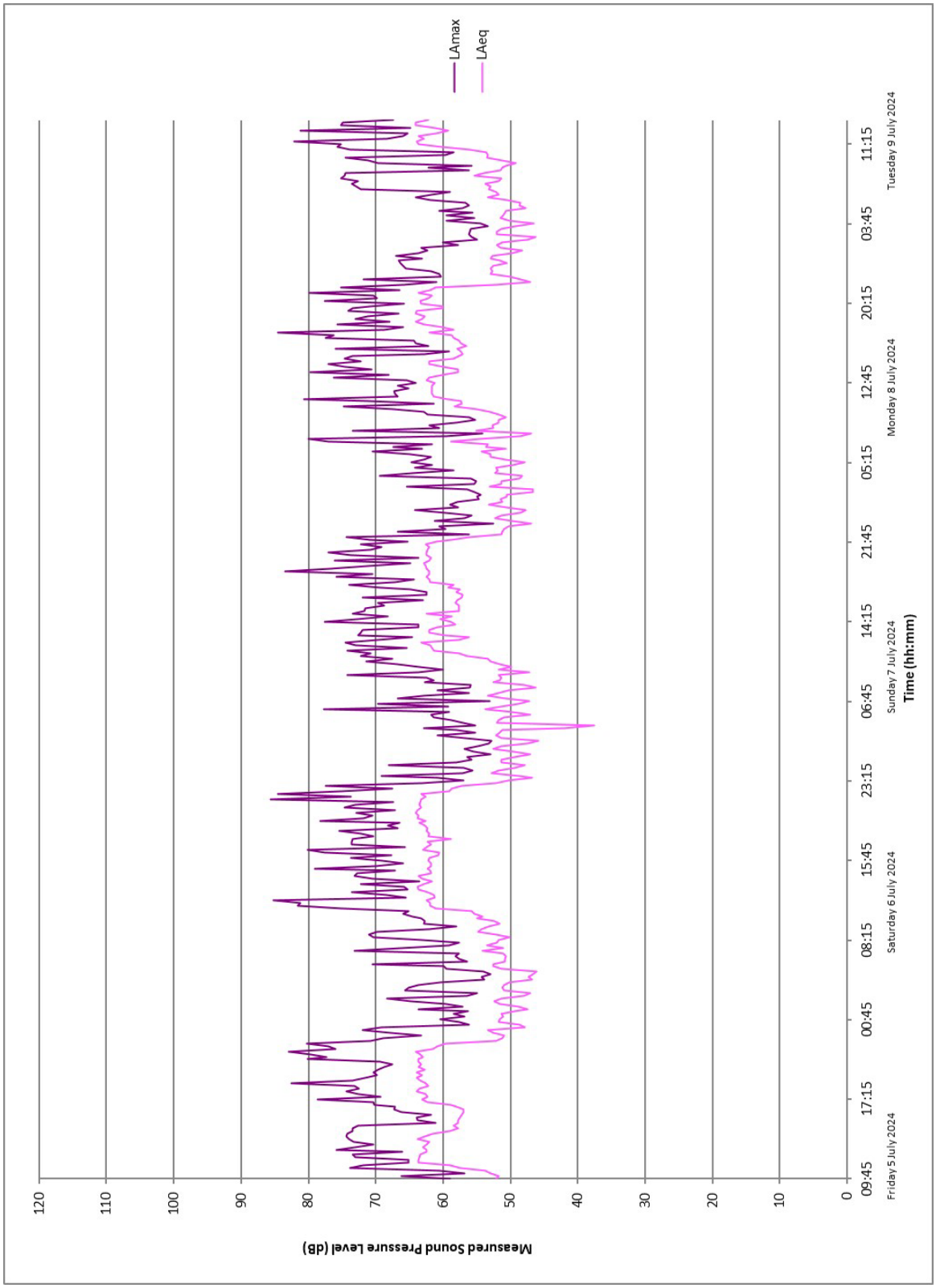

Appendix C – Glazing Datasheets

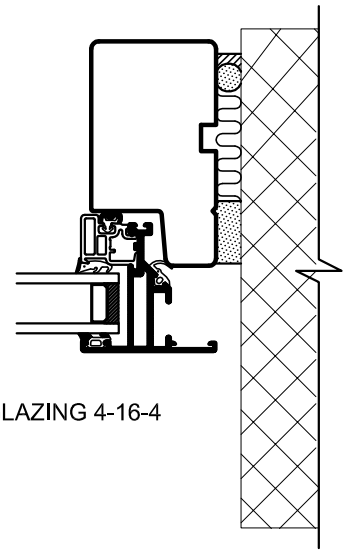

DOUBLE GLAZING 4-16-4

OFFICIAL REPORT
AVAILABLE
DANAK 2470

Frequency Hz	R dB	R dB
50	(24.9)	(21.5)
63	(19.2)	
80	(22.2)	
100	19.7	20.0
125	21.2	
160	19.4	
200	17.1	18.9
250	18.7	
315	22.2	
400	25.5	28.5
500	29.8	
630	33.8	
800	36.1	37.5
1000	37.7	
1250	39.2	
1600	40.7	38.7
2000	39.1	
2500	37.0	
3150	31.8	34.9
4000	35.9	
5000	42.7	
Rw	32	
Rw+C	31	
Rw+Ctr	27	

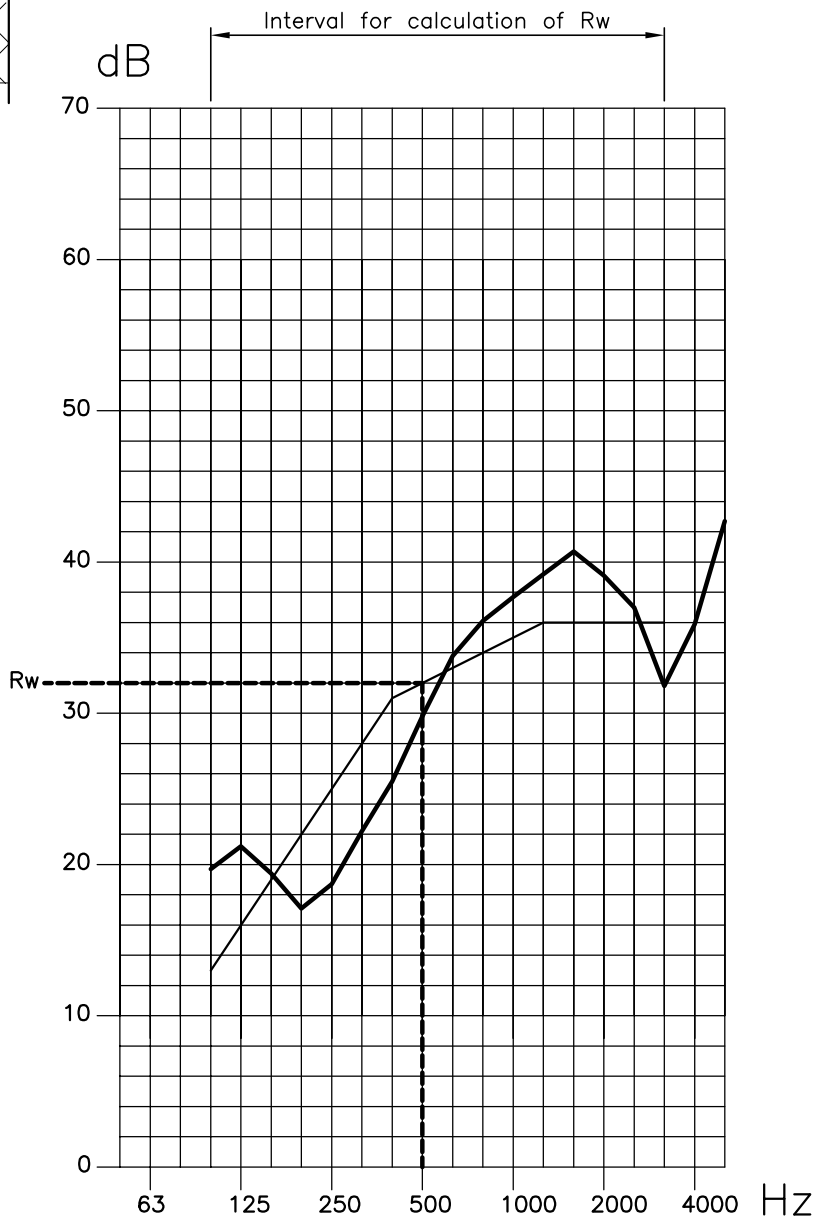

VELFAC©
www. VELFAC.dk

VELFAC A/S
Ribovej 5, DK-6950 Ringkøbing
Tlf. +45 9675 5200
Fax +45 9675 5201

Emne
VELFAC 201
TEST RESULT - OUTLINE
SOUND REDUCING WINDOW

Kravspec. nr.				Mål	1:3
				Dato	28.11.2006
Matr.				Sign.	BTH
				Kontr.	
4				Sag nr.	T06037
3				Tegn. nr.	
2					M01
Udg	Uge/år	Sign.	Rettelse	Udgave nr.	01

Denne tegning må ikke overlades til, kopieres eller udnyttes af uvedkommende

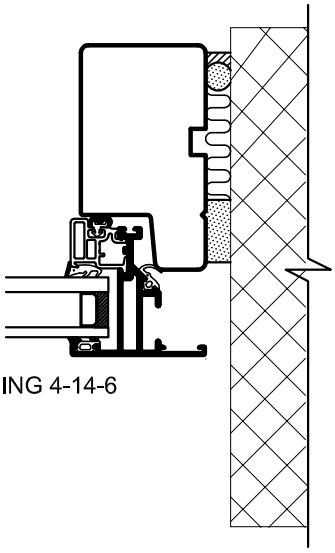

DOUBLE GLAZING 4-14-6

OFFICIAL REPORT
AVAILABLE
DANAK 2471

Frequency Hz	R dB	R dB
50	(30.6)	(24.1)
63	(20.7)	
80	(26.2)	
100	23.2	23.0
125	23.5	
160	22.3	
200	21.5	23.0
250	22.5	
315	26.4	
400	30.9	32.8
500	32.7	
630	36.2	
800	37.6	38.5
1000	38.5	
1250	39.6	
1600	40.6	38.5
2000	37.7	
2500	37.9	
3150	34.8	37.9
4000	38.8	
5000	45.8	
Rw	35	
Rw+C	34	
Rw+Ctr	31	

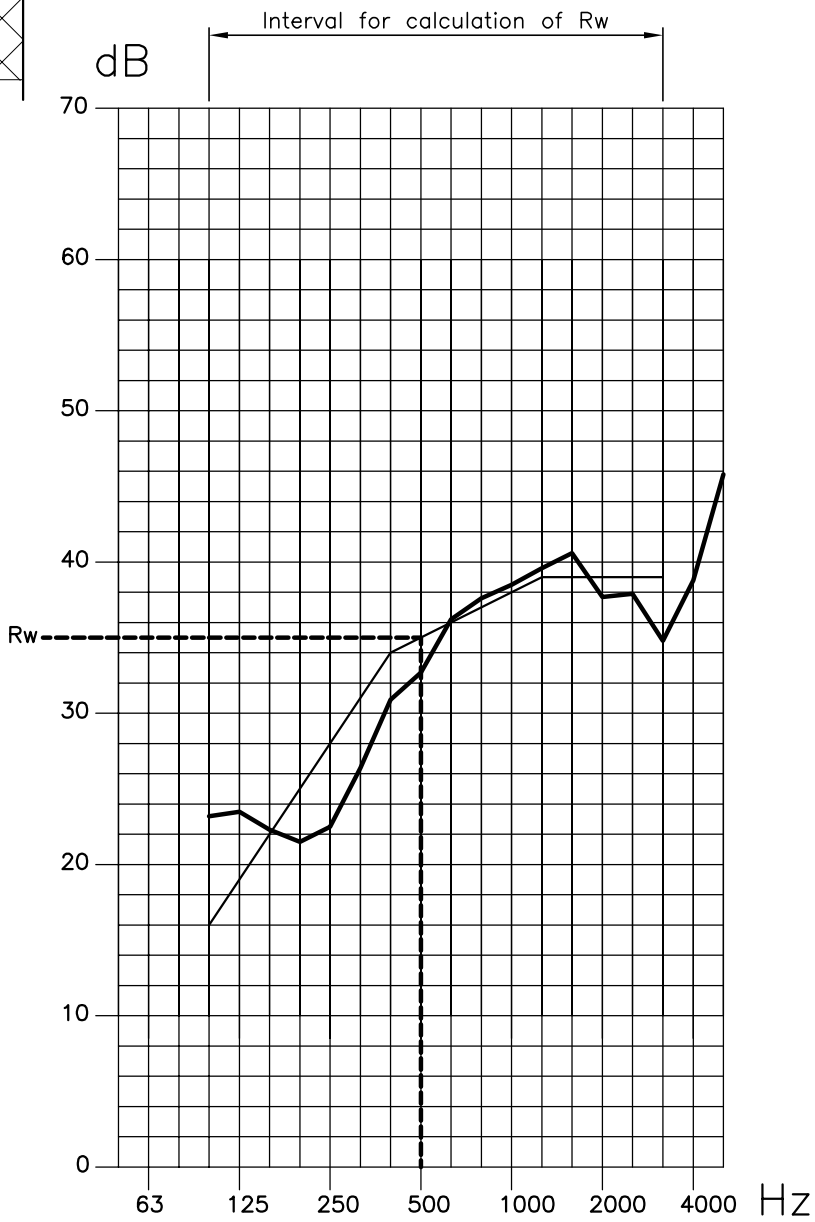

VELFAC©
www. VELFAC.dk

VELFAC A/S
Ribovej 5, DK-6950 Ringkøbing
Tlf. +45 9675 5200
Fax +45 9675 5201

Emne
VELFAC 201
TEST RESULT - OUTLINE
SOUND REDUCING WINDOW

Kravspec. nr.				Mål	1:3
				Dato	28.11.2006
Matr.				Sign.	BTH
				Kontr.	
4				Sag nr.	T06037
3				Tegn. nr.	
2					M02
Udg	Uge/år	Sign.	Rettelse	Udgave nr.	01

Denne tegning må ikke overlades til, kopieres eller udnyttes af uvedkommende

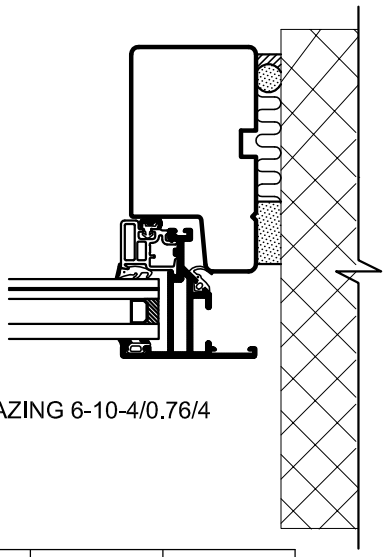

DOUBLE GLAZING 6-10-4/0.76/4

OFFICIAL REPORT
AVAILABLE
DANAK 2481

Frequency Hz	R dB	R dB
50	(24.9)	(25.8)
63	(25.5)	
80	(27.3)	
100	25.0	24.7
125	24.2	
160	25.1	
200	22.2	25.6
250	27.5	
315	32.7	
400	35.4	37.7
500	38.7	
630	40.6	
800	39.8	40.5
1000	39.9	
1250	42.2	
1600	43.1	41.4
2000	39.9	
2500	41.8	
3150	44.7	47.9
4000	49.9	
5000	53.2	

Rw	39
Rw+C	37
Rw+Ctr	34

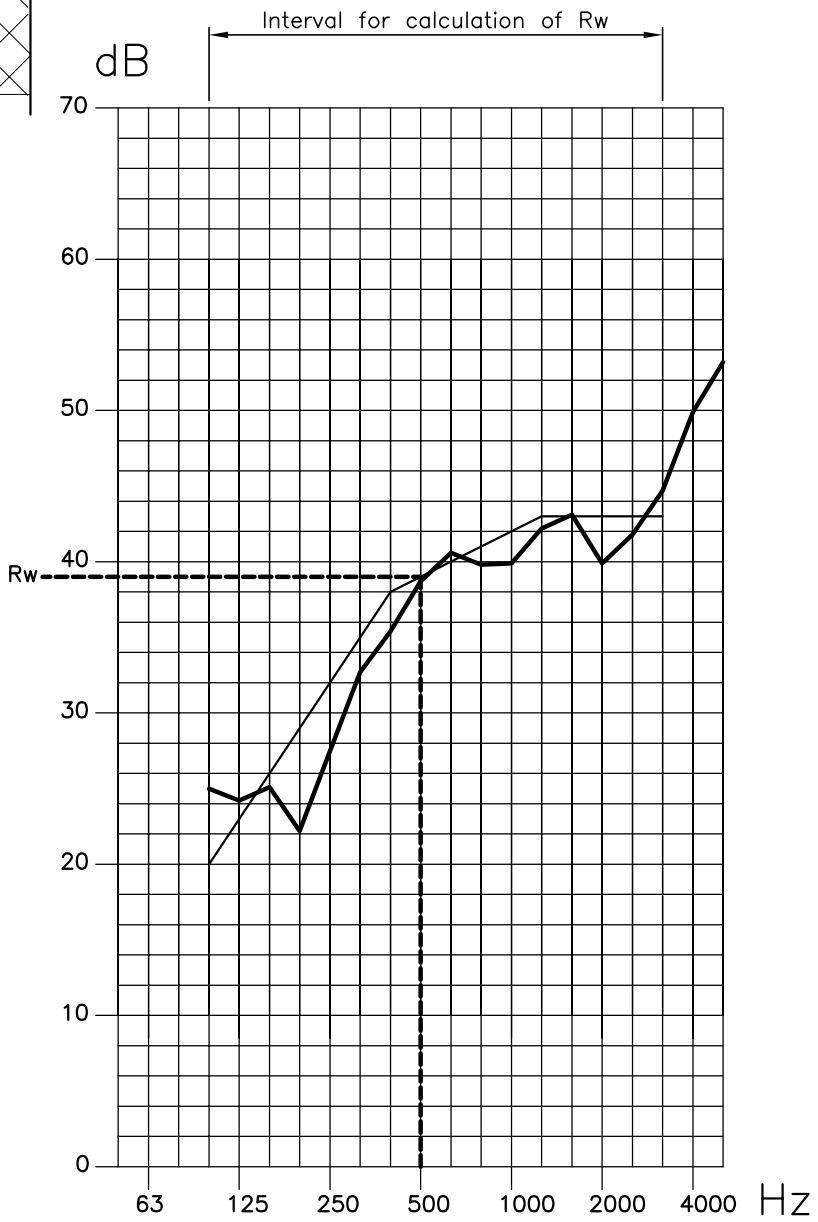

VELFAC©
www. VELFAC.dk

VELFAC A/S
Ribovej 5, DK-6950 Ringkøbing
Tlf. +45 9675 5200
Fax +45 9675 5201

Emne
VELFAC 201
TEST RESULT - OUTLINE
SOUND REDUCING WINDOW

Kravspec. nr.				Mål	1:3
				Dato	18.12.2006
Matr.				Sign.	BTH
				Kontr.	
4				Sag nr.	T06037
3				Tegn. nr.	
2					M16
Udg	Uge/år	Sign.	Rettelse	Udgave nr.	01

Denne tegning må ikke overlades til, kopieres eller udnyttes af uvedkommende