MARK WELBY
CONSULTING ARBORISTS

Arboricultural Report

Including a tree survey, impact assessment and method statement for parking provisions at

35 Jesse Terrace, Reading, RG1 7RS

Reference: MW.2501.JTR.AIA
Client: Gursel Demeni
Date: 23 January 2025
Revision: -

Mark Welby DipArb(RFS), TechCert(ArborA), FArborA
01730 239 492 | mark@mwelby.com | www.mwelby.com
M Welby Ltd, trading as Mark Welby Consulting Arborists
Hampshire, UK

AA Registered CONSULTANT trees.org.uk

Arboricultural ASSOCIATION Fellow Member

Executive Summary

Trees are a consideration in this planning application for a new parking area. Therefore, this report has been drafted to provide the information required to enable the local planning authority to meet the duty placed upon them by section 197 of the Town and Country Planning Act (as amended, 2021).

Included are a BS5837:2012 compliant tree survey, arboricultural impact assessment, and tree protection strategy that includes a method statement and tree protection plan.

One low-quality shrub must be removed to facilitate the proposals. Any loss that may be felt as a result of its removal can be mitigated through new planting within the site. An approximate location for the new tree and a suggested species are proposed.

Once the shrub is removed, the parking will be outside the root protection area of the remaining tree which will be protected with standard barrier fencing.

Provided the protection strategy is implemented as outlined, this application has a low arboricultural impact and is thus acceptable.

Table of Contents

1. Instructions and Terms of Reference 2
Documents Supplied 2
2. Statutory & Other Relevant Constraints 3
3. Survey Scope & Methodology 3
4. Arboricultural Impact Assessment 5
Proposal 5
Tree Removals 5
Tree Surgery 5
Construction Impact 6
Supervision & Monitoring 6
Barrier Type 6
Summary 6
5. Arboricultural Method Statement 7
Phasing 7
Pre-start Confirmation 7
Construction Exclusion Zone (CEZ) 8
Protection Barriers 8
Ground Protection 9
Site Induction 10
Tree Surgery 10
6. Limitations of Use and Copyright. 11
Appendix 12
i. Tree Protection Barriers 13
ii. Tree Categories Explained 15
iii. Protection Plan 16

1. Instructions and Terms of Reference

1.1. In January 2025, I was instructed by Gursel Demeni to undertake a tree survey and to produce this report to accompany a planning application for a new parking area at 35 Jesse Terrace, Reading, RG1 7RS.

1.2. Following the recommendations of the British Standard[1], this report includes the necessary information to enable the local planning authority to meet the duty placed upon them by section 197 of the Town and Country Planning Act (as amended, 2021).

1.3. It demonstrates that the proposal's impact, both direct and indirect, has been assessed, and mitigation, compensation, and tree protection have been proposed where appropriate.

1.4. Correctly implementing the tree protection specified in this report is critical for ensuring the retained trees are successfully protected throughout construction.

1.5. The assessment considers the proposal's impact on the constraints of trees retained within the site and those on adjacent land. Such impact can be caused directly through construction damage and indirectly from post-development resentment and pressure to detrimentally prune or remove the trees. The latter is often due to a poor juxtaposition between the proposal and the trees.

1.6. A tree's root protection area (RPA) represents a minimum area in m^2 that shall be left undisturbed around it. This is initially represented by a circle but is fundamentally an area of rooting volume. It is often adjusted to account for constraints to root growth within the site (primarily highways and buildings). The British Standard provides recommendations regarding the protection of existing trees during the construction process. This is achieved by ensuring a tree protection strategy is implemented before any demolition or construction on site.

Documents Supplied

- Proposed: B1598-02 Car park plan.pdf

[1]BS5837:2012 Trees in relation to design, demolition and construction

2. Statutory & Other Relevant Constraints

Local Planning Authority	Reading Borough Council
Tree Preservation Orders https://experience.arcgis.com/experience/	No
Conservation Areas https://experience.arcgis.com/experience/	Yes
Forestry Act (1967)	Gardens are exempt
Ancient Semi-Natural Woodland (ASNW) https://magic.defra.gov.uk/MagicMap.aspx	None
Ancient Tree Inventory https://ati.woodlandtrust.org.uk/tree-search/?v=	None
Obvious veteran trees	None
Sites of special scientific interest (SSSI) https://magic.defra.gov.uk/MagicMap.aspx	No
Legal covenants and outstanding planning conditions	Not known

Table: Constraints checked at the time of writing

3. Survey Scope & Methodology

3.1. Tree survey data can be found on the appended plan.

3.2. The tree survey has been carried out following the recommendations of The British Standard and the trees are assessed objectively and without reference to any site layout proposals. Categories are based on each tree's health and condition, together with an assessment of its life expectancy if its surroundings were to be unchanged.

3.3. The reference numbers of surveyed trees and groups of trees are shown on the tree reference plan, which is appended to this report and based on the supplied survey drawing. Stem locations within groups may be estimated, and indicative of canopy only.

3.4. The tree survey was carried out from ground level only, with the aid of binoculars as necessary, following the Visual Tree Assessment[2] (VTA) method.

3.5. Where trees are located on neighbouring land, an estimated appraisal of their quality and dimensions has been made.

3.6. Where stems or branches are obscured by ivy or other materials a full assessment of those parts will not be possible.

3.7. Tree heights were measured with a clinometer or estimated in relation to those measured.

[2] Mattheck, C. & Breloer, H., 1998. The Body Language of Trees: A Handbook for Failure Analysis. London:H.M.S.O.

3.8. Trunk diameters are measured at 1.5m above ground level, where this is not possible, then Figure C.1 of the British Standard is followed.

3.9. Tree canopies were markedly asymmetrical, and were measured (or estimated by pacing) in four directions using a laser measure. Symmetrical canopies are measured in one direction only, with dimensions in the remaining directions assumed to be similar. For the canopies of groups of trees, the maximum radius for each compass point is measured (more complicated groups will have further notes taken and an accurate representation will be shown on the plan).

3.10. All estimated dimensions are noted in the data.

4. Arboricultural Impact Assessment

Proposal

4.1. It is proposed to provide parking facilities to the rear of No. 35, the layout of which can be seen on the appended plan.

Tree Removals

4.2. One low-quality shrub must be removed to facilitate the proposals. This is a cherry laurel of limited wider value. Any loss that may be felt as a result of its removal can be mitigated through new planting within the site. An approximate location for the new tree is shown on the appended plan and it is suggested that a silver birch (*Betula pendula*) of 12-14cm girth be planted.

Fig 1: Laurel #01. To be removed and replaced

Tree Surgery

4.3. There are no plans for any tree surgery work at this stage.

Construction Impact

4.4. Once the shrub is removed, the parking will be outside the root protection area of the remaining tree which will be protected with standard barrier fencing.

Supervision & Monitoring

4.5. Some sites require more arboricultural involvement during the construction process than others. This is typically commensurate with the pressure on retained trees and the complexity of the tree protection strategy.

4.6. It is my opinion that regular monitoring visits would not be necessary for this project.

Barrier Type

4.7. As the proposed construction work is comparatively 'low impact', the default British Standard tree protection specification seems somewhat onerous. Therefore, it is my opinion that an adequate level of protection can be provided with a lesser specification.

4.8. Alternative specifications can be found in Appendix i. TPF 2 or TPF 3 are proposed.

Summary

4.9. Provided the tree protection strategy is implemented as outlined in the following method statement, this application has a low arboricultural impact and is thus acceptable.

5. Arboricultural Method Statement

5.1. The tree protection on this site is subject to implementation as detailed in the following sections.

5.2. The recommendations of the British Standard have been applied where viable. Where deviations from the preferred approach are required, the impact on any retained trees is minimised through a combination of supervision from an arboriculturist and adherence to the associated method statement.

5.3. Once permission is granted, the strategy must be followed to avoid impacting the trees and adhere to any planning conditions.

5.4. The information within this section must be passed to the site foreman and cascaded to all relevant personnel involved in the project.

5.5. Any questions about the content or its implementation shall be directed to **Mark Welby Consulting Arborists at 01730 239492** before action is taken.

5.6. A tree protection plan showing the types of tree protection and their locations is appended. It includes the tree survey data, existing site features and the approved construction. The plan must be read in conjunction with this method statement.

Phasing

5.7. It is essential that the following phasing is followed if trees are to be effectively protected throughout construction.

1	Tree removals
2	Installation of protection barriers (Appendix i: TPF 2 or 3)
3	Confirmation that tree protection barriers are installed to be sent to LPA
4	Construction Phase
5	Removal of tree protection barriers upon completion of work

Table 1: Timing of operations in relation to trees

5.9. Shall any of the protection measures prove incompatible with elements of the build program, contact the project arboriculturist to discuss options.

Pre-start Confirmation

5.10. The most important step in the tree protection process: confirmation that the tree protection barriers are in place must be forwarded to the LPA before any external work starts. This may be a photographic record sent via email.

Construction Exclusion Zone (CEZ)

5.11. The CEZ is a root-sensitive area where construction activities are to be excluded. The default method of doing so is through the installation of tree protection barriers. If construction access is required in the CEZ then ground protection can be used to facilitate this.

5.12. Everyone engaged in the construction process is responsible for respecting the tree protection measures and observing the necessary precautions within and adjacent to them.

5.13. Inside the exclusion zone, the following shall apply:

- No mechanical excavation whatsoever;
- No excavation by any other means without arboricultural site supervision;
- No hand digging without a written method statement having first been approved by the project arboriculturist;
- No lowering of levels for any purpose (except removal of grass sward using hand tools);
- No storage of plant or materials;
- No storage or handling of any chemical including cement washings;
- No vehicular access (unless ground protection is installed);
- No fire lighting.

5.14. In addition to the above, further precautions are necessary adjacent to trees:

- No substances injurious to tree health, including fuels, oil, bitumen, cement (including cement washings), builder's sand, concrete mixing and other chemicals shall be stored or used within or directly adjacent to the protection area of retained trees;
- No fire shall be lit such that flames come within 5m of tree foliage.

5.15. Variations from the above may be specified in the following sections of this method statement. This is only acceptable where detailed and will typically be subject to supervision by the arboriculturist.

Protection Barriers

5.16. Barriers must be fit to exclude construction activity and appropriate to the degree and proximity of work around the retained tree(s). Barriers shall be maintained to ensure that they remain rigid and complete.

5.17. See Appendix *i* for barrier specifications.

5.18. On this project, types TPF 2 or TPF 3 are to be used.

Ground Protection

5.19. If required to facilitate access within the CEZ (or as shown on the appended tree protection plan), ground protection is to be installed. If not already included on the tree protection plan, it must be approved in writing by the local planning authority before implementation. The ground protection must be capable of supporting the expected loads and avoiding rutting, compaction and damage to the soil: as advised in section 6.2.3 of the British Standard.

GP1: Tree protection barriers and scaffold ground protection

GP2: Tree protection barriers & trackmat ground protection

5.20. Stages of ground protection installation:

1. If required, dismantle barriers and re-erect them to protect any newly exposed CEZ not to be covered by ground protection;
2. Any shrubs, saplings or trees to be removed, are to be cut or ground out to just below ground level rather than grubbed or winched out, which can damage the roots of retained trees;
3. Lay woven geotextile over the existing ground surface by hand;
4. Cover the area with a compressible layer (200mm of woodchip, for example), using hand tools only;
5. Cover compressible layer with side butting scaffold boards, plywood boards of proprietary trackway/trackmats;
6. Confirm surface is acceptable for use with the project arboriculturist;
7. Area ready for construction access;
8. Any scaffolding required within the area will be erected with the uprights placed on spreader boards;
9. The boarding will be left in place until the construction works are finished.

5.21. A single thickness of boarding laid on the soil surface will provide sufficient protection for pedestrian loads. However, for wheeled or tracked construction traffic movements within the RPA, ground protection will involve the use of temporary geocell/cellular confinement systems, reinforced concrete slabs or track-board systems details of which are to be specified by the project engineer and approved for use by the project arboriculturist and local authority before construction commences.

5.22. Track-boards can be sourced from Trakmats, 0800 622 6838, www.trakmats.co.uk, or GroundGuards, 0113 209 3685, www.ground-guards.co.uk.

5.23. There is to be no excavation within the ground protection area whatsoever. This includes the installation of services and associated utilities, without prior approval.

Site Induction

5.24. All site staff are to be briefed on the tree protection strategy for the site as part of the general site induction procedure. This can be carried out by the site manager once he has been briefed by the project arboriculturist.

5.25. In general, this will include the following:

1. Explanation of the purpose of the tree protection barriers and any ground protection
2. Explanation of the demolition procedures near trees
3. Explanation of the sensitive/supervised excavation areas
4. What to do if access is needed within a protected area for any reason
5. What to do if damage occurs to any tree protection barriers and how to contact the project arboriculturist if necessary.

Tree Surgery

5.26. Should any pruning work be required, the following must be adhered to once any requisite permissions are obtained.

5.27. All work will be carried out under BS3998[3] industry best practice and in line with any works already agreed upon with the council.

5.28. The statutory protection[4] [5] will be adhered to. If further advice is required, particularly if bats are discovered during tree work, it will be obtained from Natural England or other competent persons and recommendations adhered to.

[3] *BS3998:2010- Recommendations for Tree Work.* London: British Standards Institute

[4] *Wildlife and Countryside Act.* (1981) London: HMSO.

[5] *Conservation of Habitats and Species Regulations (2017)* London: HMSO.

5.29. The stumps of any trees removed from within the Construction Exclusion Zone or the RPAs of retained trees will be either cut flush to ground level and left in situ or ground out using a stump grinder. They will not be winched out.

5.30. All operations shall be carefully carried out to avoid damage to the trees being treated or neighbouring trees. No trees to be retained shall be used for anchorage or winching purposes.

6. Limitations of Use and Copyright.

Copyright M Welby Ltd trading as Mark Welby Consulting Arborists. All rights reserved.

No part of this report may be copied or reproduced by any means without prior written permission from M Welby Ltd. If you have received this report in error, please destroy all copies in your possession or control and notify M Welby Ltd. This report has been prepared for the exclusive use of the commissioning party and unless otherwise agreed in writing by M Welby Ltd, no other party may use, make use of or rely on the contents of the report. No liability is accepted by M Welby Ltd for any use of this report, other than for the purposes for which it was originally prepared and provided. Opinions and information provided in the report are based on M Welby Ltd using due skill, care and diligence in the preparation of the same and no explicit warranty is provided as to their accuracy. It shall be noted, and it is expressly stated that no independent verification of any of the documents or information supplied to M Welby Ltd. has been made.

Appendix

i. Tree Protection Barriers

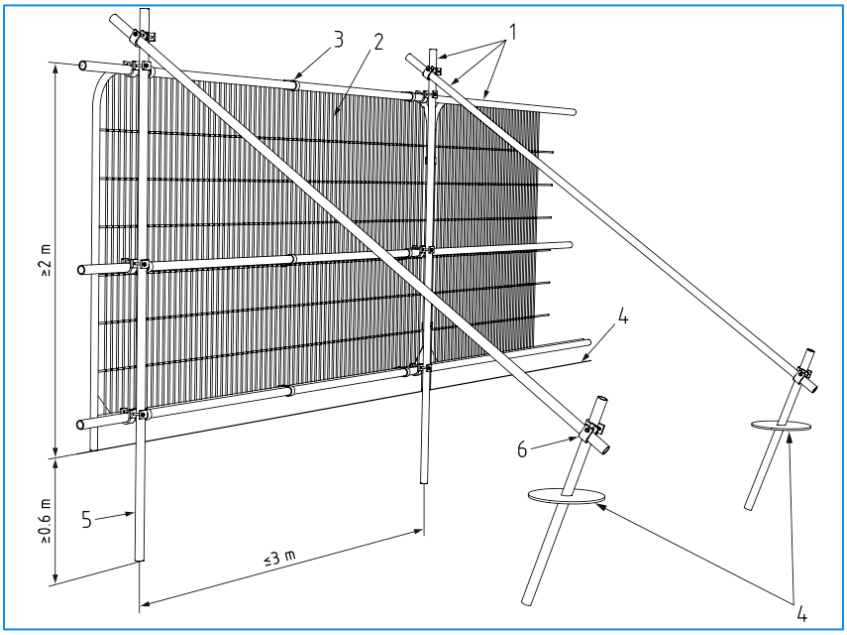

1 Standard scaffold poles

2 Heavy gauge 2 m tall galvanised tube and welded mesh infill panels

3 panels secured to up rights and cross members with wire-ties

4 ground level

5 uprights driven into the ground until secure (minimum depth 0.6 m)

6 Standard scaffold clamps

TPF1: Default specification for protective barrier (Fig 2 from BS5837:2012)

TPF 2: Alternative fencing option: scaffold uprights with backstay

TPF 3:Alternative fencing option: on boots with backstay

TPF 4: Plastic barrier for low intensity areas of construction

TPF 5: Chain-link for low intensity areas on large projects

ii. Tree Categories Explained

BS5837:2012 Table 1 -**Cascade chart for tree quality assessment**			
Category and definition	**Criteria (including subcategories where appropriate)**		
Trees unsuitable for retention (see Note)			
Category U Those in such a condition that they cannot realistically be retained as living trees in the context of the current land use for longer than 10 years	*Trees that have a serious, irremediable, structural defect, such that their early loss is expected due to collapse, including those that will become unviable after removal of other category U trees (e.g. where, for whatever reason, the loss of companion shelter cannot be mitigated by pruning) *Trees that are dead or are showing signs of significant, immediate, and irreversible overall decline *Trees infected with pathogens of significance to the health and/or safety of other trees nearby, or very low quality trees suppressing adjacent trees of better quality *NOTE Category U trees can have existing or potential conservation value which it might be desirable to preserve; see **4.5.7.***		
	1 Mainly arboricultural qualities	**2 Mainly landscape qualities**	**3 Mainly cultural values, including conservation**
Trees to be considered for retention			
Category A **Trees of high quality** with an estimated remaining life expectancy of at least 40 years	Trees that are particularly good examples of their species, especially if rare or unusual; or those that are essential components of groups or formal or semi-formal arboricultural features (e.g. the dominant and/or principal trees within an avenue)	Trees, groups or woodlands of particular visual importance as arboricultural and/or landscape features	Trees, groups or woodlands of significant conservation, historical, commemorative or other value (e.g. veteran trees or wood-pasture)
Category B **Trees of moderate quality** with an estimated remaining life expectancy of at least 20 years	Trees that might be included in category A, but are downgraded because of impaired condition (e.g. presence of significant though remediable defects, including unsympathetic past management and storm damage), such that they are unlikely to be suitable for retention for beyond 40 years; or trees lacking the special quality necessary to merit the category A designation	Trees present in numbers, usually growing as groups or woodlands, such that they attract a higher collective rating than they might as individuals; or trees occurring as collectives but situated so as to make little visual contribution to the wider locality	Trees with material conservation or other cultural value
Category C **Trees of low quality** with an estimated remaining life expectancy of at least 10 years, or young trees with a stem diameter below 150mm	Unremarkable trees of very limited merit or such impaired condition that they do not qualify in higher categories	Trees present in groups or woodlands, but without this conferring on them significantly greater collective landscape value; and/or trees offering low or only temporary/transient landscape benefits	Trees with no material conservation or other cultural value

iii. Protection Plan

See the following page

BS5837 Tree Survey: Trees & Groups to be Retained

Retained Trees / Groups

Ref	Species	Common Name	Height	Stem Diameter	Crown Clearance	Age Class	Observations	Tree Surgery	Est. Remaining Contribution	Date Surveyed	BS Cat	RPA Radius	RPA Area	No.
02	Prunus sp.	Prunus	5m	270mm	2m	Mature	Small tree in rear garden. Close to boundary wall. Ivy clad. Limited wider value		10 Years	20/1/2025	C1	3.3m	34m²	1
														Total :1

Survey by Mark Welby DipArb(RFS), TechCert(ArborA), FArborA
Arboricultural Association Registered Consultant
www.mwelby.com

# denotes estimated dimension. Typically due to the tree being inaccessible.
Where dimensions are not listed please refer to the plan graphics for an indicatvie representation (typically for groups).

Trees & Groups for Removal

Removed Trees / Groups

Ref	Species	Common Name	Height	Stem Diameter	Crown Clearance	Age Class	Observations	Est. Remaining Contribution	Date Surveyed	BS Cat	No.
01	Prunus laurocerasus	Laurel cherry	5m	400mm	2m	Early-Mature	Large shrub. Many stems from 1 m. Crudely lopped over site	10 Years	20/1/2025	C1	1
											Total :1

Construction Exclusion Zone

It is the responsibility of everyone engaged in the construction process to respect the tree protection measures and observe the necessary precautions within and adjacent to them.

Inside the exclusion zone, the following shall apply:
- No mechanical excavation whatsoever;
- No excavation by any other means without arboricultural site supervision;
- No hand digging without a written method statement having first been approved by the project arboriculturist;
- No lowering of levels for any purpose (except removal of grass sward using hand tools);
- No storage of plant or materials;
- No storage or handling of any chemical including cement washings;
- No vehicular access;
- No fire lighting.

In addition to the above, further precautions are necessary adjacent to trees:
- No substances injurious to tree health, including fuels, oil, bitumen, cement (including cement washings), builder's sand, concrete mixing and other chemicals shall be stored or used within or directly adjacent to the protection area of retained trees;
- No fire shall be lit such that flames come within 5m of tree foliage.

All weather signs shall be erected at reasonable intervals on the barriers. See example inset

Default specification for protective barrier

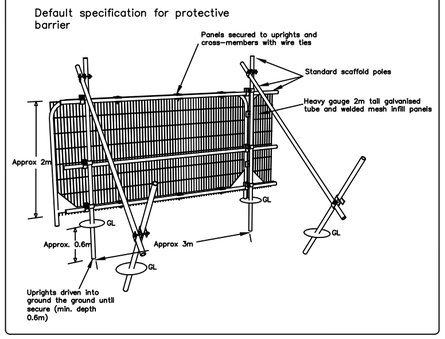

Ground Protection

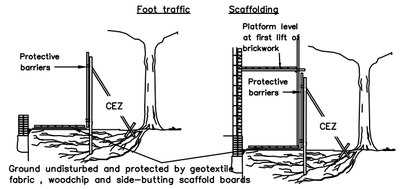

Ground undisturbed and protected by geotextile fabric , woodchip and side-butting scaffold boards

For pedestrian movements only, a single thickness of scaffold boards should be placed either on top of a driven scaffold frame, so as to form a suspended walkway, or on top of a compression-resistant layer (e.g. 100 mm depth of woodchip), laid onto a geotextile.

For pedestrian operated plant up to a gross weight of 2 t, proprietary, inter-linked ground protection boards should be placed on top of a compression-resistant layer (e.g. 150 mm depth of woodchip), laid onto a geotextile.

For wheeled or tracked construction traffic exceeding 2 t gross weight, an alternative system (e.g. pre-cast reinforced concrete slabs) should be employed to an engineering specification designed in conjunction with arboricultural advice to accommodate the likely loading to which it will be subjected.

NOTES
This Tree Survey has been undertaken within the recommendations of British Standards 5837:2012 and current arboricultural best practice.
- The reference numbers of surveyed trees and groups of trees are shown. Stem locations within groups may be estimated, and indicative of canopy only
- The tree survey was carried out from ground level only, with the aid of binoculars as necessary, following the Visual Tree Assessment (VTA) method.
- Where trees are located on neighbouring land an estimated appraisal has been made of their quality and dimensions.
- Where stems or branches are obscured by ivy or other materials a full assessment of those parts will not be possible.
- Height dimensions are estimated and are given in metres.
- Trunk/stem diameters are measured in mm at 1.5 metres above ground level, unless otherwise stated. Where this is not possible, then Figure C.1 of the British Standard is followed.
- Tree canopies are graphically represented on the plan. They, where markedly asymmetrical, were measured (or estimated by pacing) in four directions using a laser measure. Symmetrical canopies are measured in one direction only, with dimensions in the remaining directions assumed to be similar. For the canopies of groups of trees, the maximum radius for each compass point is measured (more complicated groups will have further notes taken and an accurate representation will be shown on the plan).

TREE PROTECTION AREA
KEEP OUT!
(TOWN & COUNTRY PLANNING ACT 1990)
TREES ENCLOSED BY THIS FENCE ARE PROTECTED BY PLANNING CONDITIONS AND/OR ARE THE SUBJECT OF A TREE PRESERVATION ORDER.
CONTRAVENTION OF A TREE PRESERVATION ORDER, MAY LEAD TO CRIMINAL PROSECUTION
THIS FENCING MUST NOT BE REMOVED WITHOUT PERMISSION FROM THE LOCAL PLANNING AUTHORITY

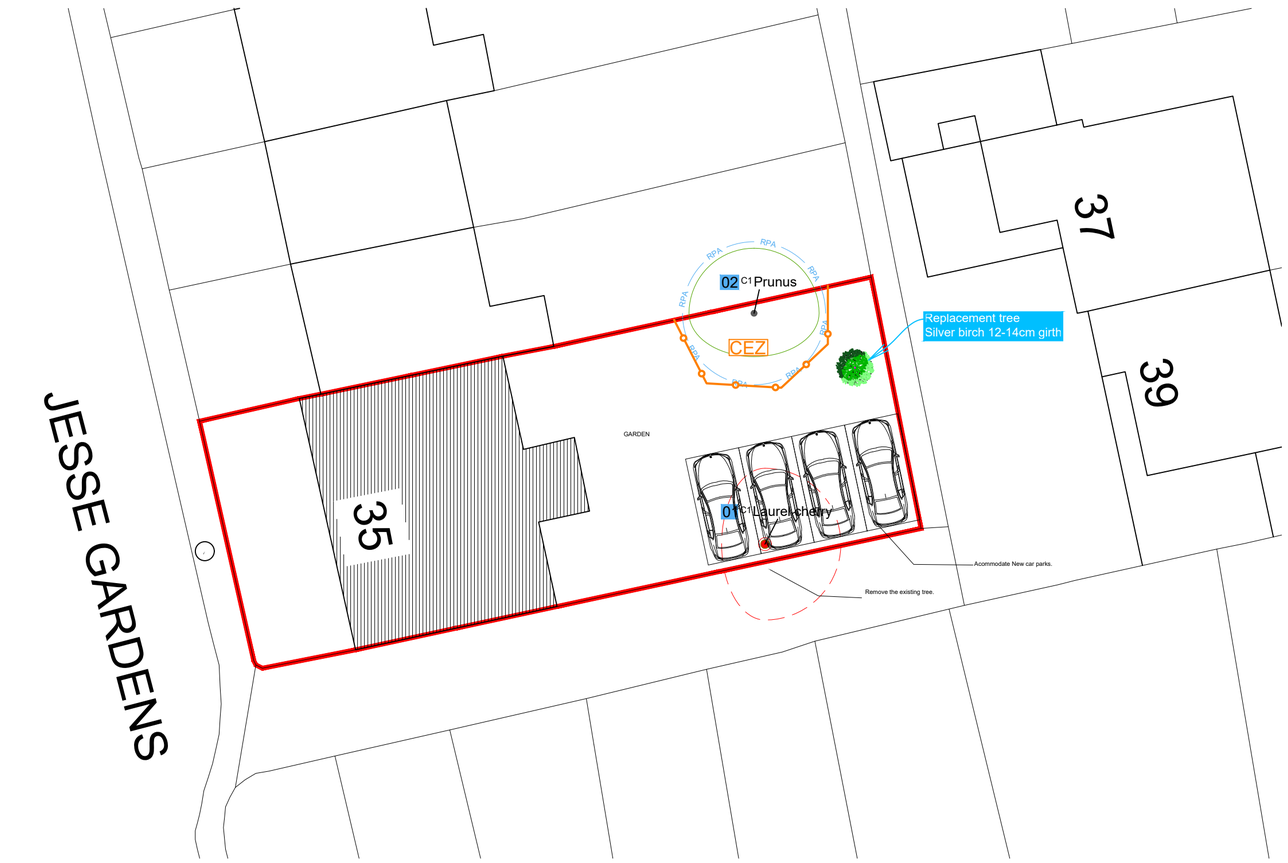

CAR PLAN
SCALE 1 : 100
0m 5m

N

Base plan/site survey reference: B1598-02 Car park plan.pdf

REV:	DATE:	UPDATES:	DRAWN:

1:200
2.0 4.0 6.0 8.0 10.0 12.0m

Construction Exclusion Zone (CEZ)

CEZ extent. To be protected with temporary protective barriers or ground protection to allow construction access. See insets and method statement for details.

Tree to be removed

01 C1 Oak
TPO ref
Tree ref/category/species & TPO ref

Root protection area

Crown spread

Veteran/Ancient tree & woodland buffer (ref: NPPF & BNG)

Veteran tree: Exceptional value (NPPF definition)

Veteran tree: High value (BNG definition)

Area of potential sunlight obstruction (shade)

BS 5837:2012 Tree Quality Categories
- Category A - High quality
- Category B - Moderate quality
- Category C - Low quality
- Category U - Unsuitable for retention

Guidance on the implementation and use of this information, along with its limitations and more can be downloaded here: https://bit.ly/BS5837FAQ
Or scan this QR code:

This plan has been drafted in colour. A monochrome version must not be relied upon

Tree Protection

35 Jesse Terrace
Reading, RG1 7RS

Date: 23/01/2025
Scale: 1:200 @A2

DWG Ref: MW.2501.JTR.TPP

MARK WELBY
CONSULTING ARBORISTS
Mark Welby
DipArb(RFS), TechCert(ArborA), FArborA
Arboricultural Association Registered Consultant
01730 239 492 | mark@mwelby.com
www.mwelby.com
M Welby Ltd. | Hampshire | UK