KITCHEN EXTRACT

UV-O RANGE

500 | 1000

purified air®

COMMERCIAL KICTHEN FILTRATION EXPERTS

Purified Air Ltd. has been manufacturing and servicing market-leading technology to filter and control oil, grease smoke and odour from commercial kitchens since 1984

CONTENTS

02 TECHNICAL OVERVIEW

Key Features 02
UV-O Technology 03
How It Works 04
Benefits of UV-O 05
Technical Specification 06

08 ABOUT US

An Overview
Our Coverage

09 GET IN TOUCH

Contact Details

KITCHEN EXTRACT

UV-O RANGE

500 | 1000

Unlike other UV-C systems, our UV-O units are located outside of the kitchen extract duct and are connected via a spigot and spiral ducting.

KEY FEATURES

- Easy to install
- Can be retro-fitted into existing duct
- Virtually no pressure loss
- No monthly maintenance needed

UV-O TECHNOLOGY

The UV-O 500 has been designed for smaller capacity commercial kitchens.

The UV-O range uses UV-C technology to produce ozone and hydroxyl free radicals to oxidise cooking odours through a process of ozonolysis.

Unlike other UV-C systems, our UV-O units are located outside of the kitchen extract duct and are connected via a spigot and small diameter ducting.

Although it is widely accepted that the best way to apply UV-C light is directly in-line with the air stream itself, performance will be impacted as the lamps get dirty.

With our UV-O units the air flow does not come from the exhaust duct but from the ambient air around the unit, which is filtered on entry. This means that it is able to provide a uniform supply of ozone and hydroxyl free radicals into the extract system with an extremely low pressure loss.

For optimum performance we would recommend between 2 & 6 seconds of dwell time to allow the ozone to work effectively upon the malodorous gasses within the duct.

HOW IT WORKS

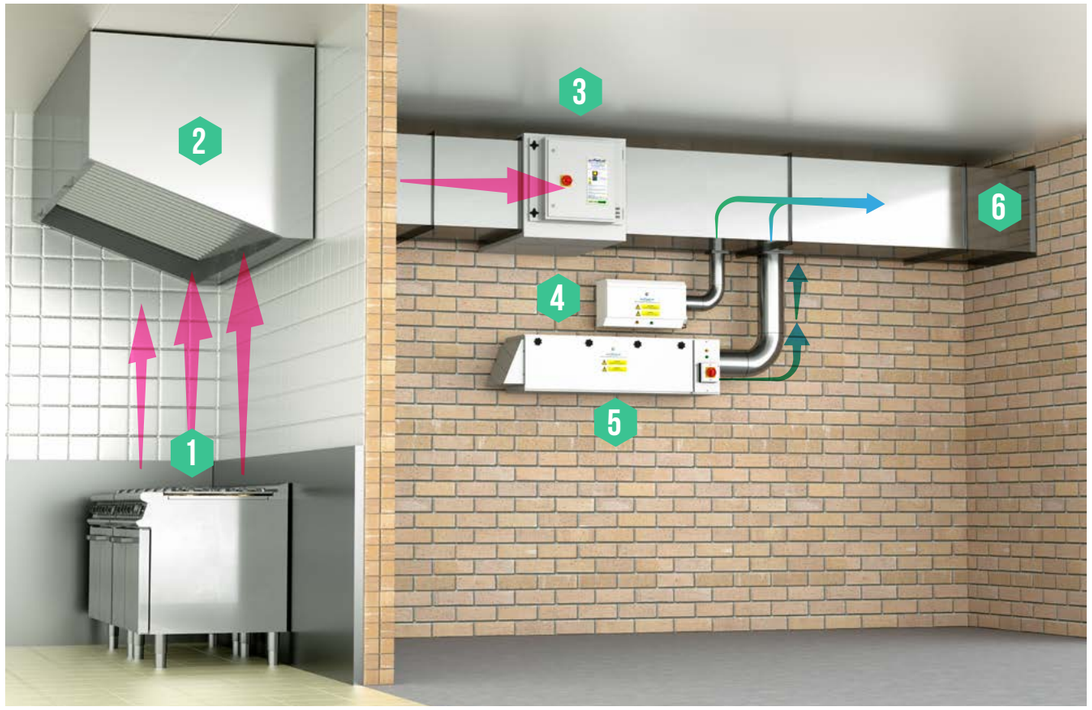

For optimum performance we would recommend between 2 & 6 seconds of dwell time to allow the ozone to work effectively upon the malodorous gasses within the duct.

When installed correctly our UV-C systems can reduce cooking odours by up to 90%**

01 Cooking particulates and odours

02 Canopy Grease Filter

03 ESP - Particulate Control Unit

04 UV-O 500

05 UV-O 1000

06 Ozone breaks down odours within the duct

THE BENEFITS OF UV-O TECHNOLOGY

- Reduces odours by up to 99%
- Easy to retro fit
- Low maintenance
- Low pressure loss

TESTED & VERIFIED BY

This unit's tried and tested UV-C technology allows commercial kitchens to be sited in locations such as residential areas and shopping centres, where previously planning permission may not have been granted. After extensive research and development Purified Air are able to devise the best combination of lamps to provide the most effective odour control.

OUR SERVICES

Design

Manufacture

Maintain

TECHNICAL SPECIFICATION

	UV-O 500	UV-O 1000
Supply	220-240V 50HZ	220-240V 50HZ
Power Consumption	120W	700W
Maximum Airflow	1.5M³/SEC (UP TO)	2.5 M³/SEC (UP TO)
Dimensions (mm)	W 605 H 630 D 200	W 1568 H 350 D 363
Weight	10.5KG (APPROX)	50KG (APPROX)

DRAWINGS

UV-O 500

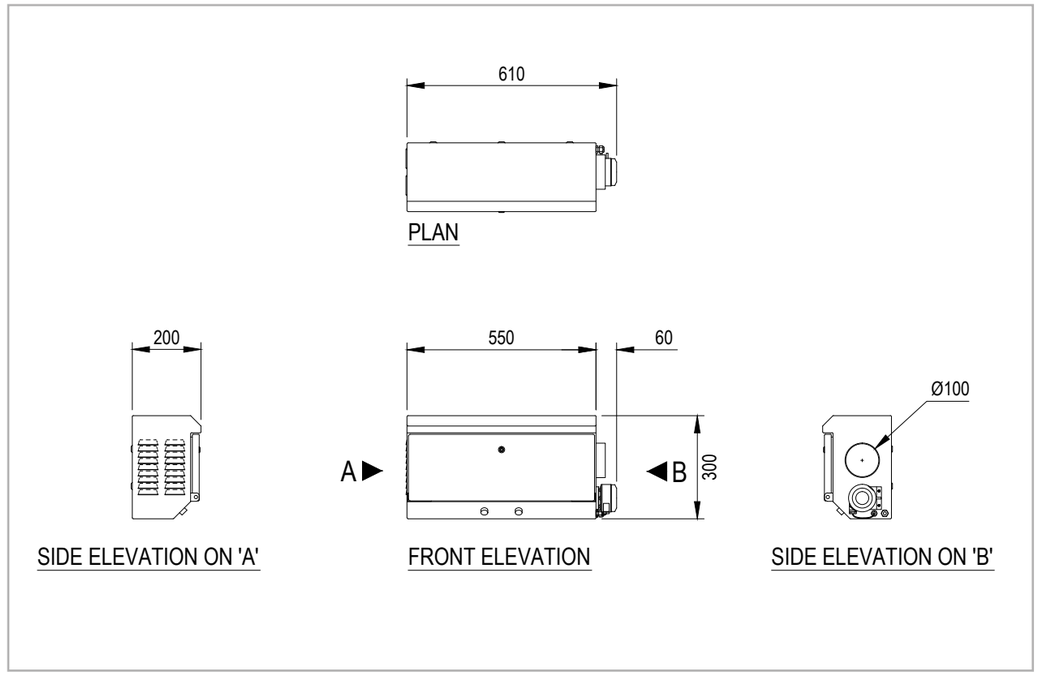

UV-O 1000

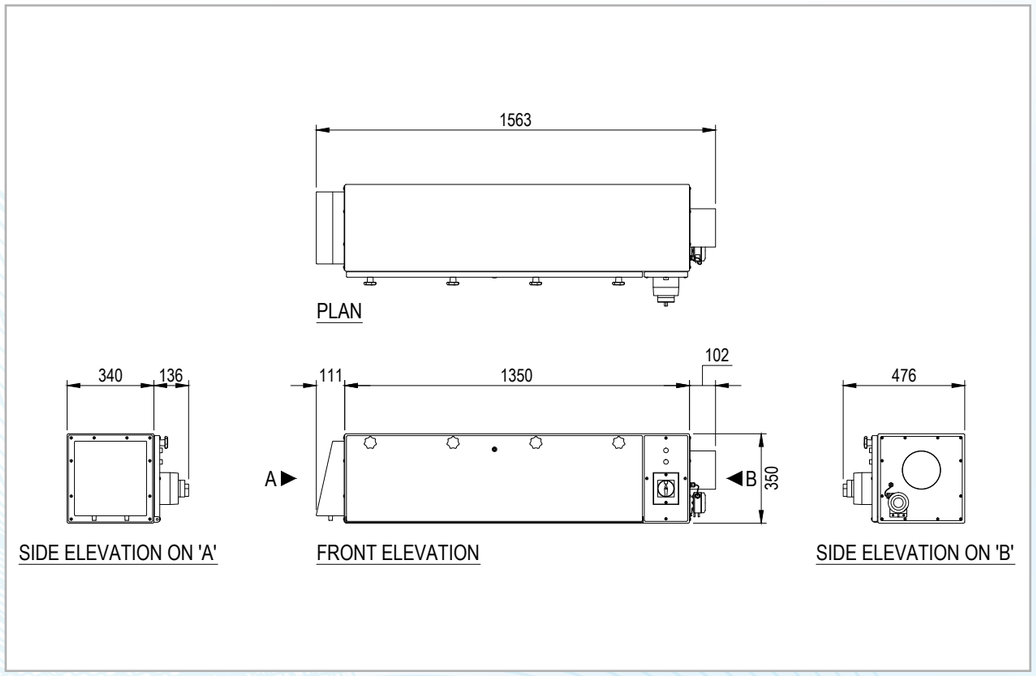

ABOUT US

Purified Air Ltd. has been striving to find the best and most cost-effective way to filter and control oil, smoke, fat and odour produced by commercial kitchens and residential installation and service since 1984.

Purified Air manufactures filtration and odour control products for stock and bespoke systems, supplying systems to many sectoral brands. The design of each solution is based on the type of food cooked, the cooking process used, and the extracted air volume providing tried and tested purified kitchen exhaust air for Fast Food, Casual Dining and Luxury Concept Restaurant (Fine Dining) markets. By working with these variables, we can design and supply some of the world's best commercial kitchen filtration and odour control systems.

WORLDWIDE COVERAGE

- United Kingdom
- Middle East
- Europe

UK MANUFACTURER

38 YEARS EXPERIENCE SINCE 1984

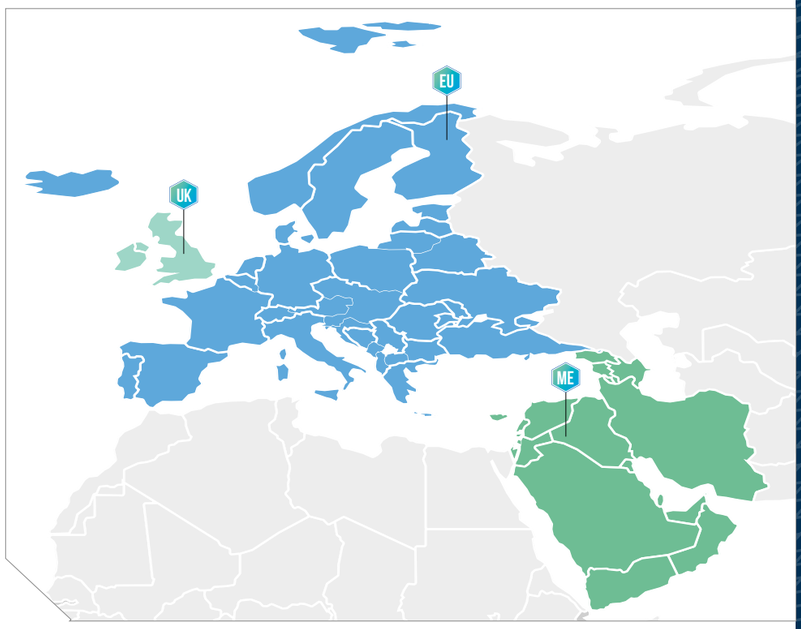

GET IN TOUCH

0800 018 4000

enq@purifiedair.com

Purified Air Limited, Lyon House
Lyon Road, Romford,
Essex RM1 2BG

purifiedair.com

purifiedair®

purifiedair.com