REVOLUTION SLC

Long Cased Axial Flow Fan

» **Select** models available for next day delivery

REVOLUTION SLC

Product Overview

- 11 standard sizes from 315mm to 1000mm
- Air volume flow rates up to 19.63 m³/s
- Static pressures up to 994 Pa
- Suitable for operating temperatures up to +60°C
- Available in **AC** & IE5 **EC**

A true industry workhorse, this extensive range offers superb performance characteristics, combined with strength, durability and corrosion resistance for a longer life.

Easy Installation

Motors are wired via a weatherproofed cable to an IP55 protected terminal box mounted on the outside of the unit casing for ease of electrical connection.

Efficient Performance

High efficiency adjustable pitch aerofoil impellers are provided with blades made from high quality pressure die cast aluminium. Increased blade chord and twist provides 7% higher efficiency reducing overall energy consumption. Increased blade root reduces stress levels which make our range of impellers ideal for arduous fan applications.

Corrosion resistance

Suitable for external mounting as standard.

Controllability

For AC fans the Eltadrive range of inverters has been designed encompassing the latest technology. IE5 EC fans can be directly connected via DC voltage 2 to 10V, DC current 4 to 20mA, Frequency 10 to 95% or a potentiometer. Both AC with Inverter and EC provide significant cost-savings through lower energy consumption.

Warranty

Each SLC has a 12 month warranty.

Construction

Units have been constructed from a single sheet of steel, with both motor and axial impeller mounted within the length of the unit casing. All casing parts are heavy gauge mild steel sheet, roll formed and welded for added strength and durability, hot dip galvanised to BS EN ISO 1461:2009.

Motor

Our high efficiency AC motors comply with the efficiency level IE2, (for use with frequency inverter). IE3 are available on request. High efficiency EC motors comply with the efficiency level IE5. Motors are foot mounted totally enclosed type to IP55 with sealed for life bearings for operating temperatures up to +54°C AC and +60°C EC.

Impeller

Increased twist aerofoil impeller provides improved efficiency and acoustics suitable for higher stress applications. Blades are made from high quality pressure die cast aluminium (LM6), natural finish. Impellers are factory set at an angle to provide maximum performance.

Typical Applications

- Kitchen Canopy Systems
- Agriculture
- Sports Halls
- Industrial Units and Warehousing
- Factories
- Schools
- Air Conditioning Units
- Cooling Towers & Stations
- Marine
- Airports
- Hotels

Contents

Page	Information	Load
3	Performance Range Curves	AC
5	Performance Range Curves	EC
6	Performance, SFP & Electrical Data	AC
9	Performance, SFP & Electrical Data	EC
11	Sound Data	AC
14	Sound Data	EC
16	Dimensional Data	AC
18	Dimensional Data	EC
19	Accessories	AC
22	Accessories	EC
37	Notes	

Product Coding

Code	Reference
SLC	Product Range
315	Diameter (315/355/400...)
/	
4	Number of Poles (2/4/6)
–	
3	Voltage Supply (Single Phase / Three Phase)
AC	Motor Type (AC/EC)
A - Z	Additional Coding (A - Z) Product Variants
e.g.	SLC315 / 4-3AC

Tel **01384 275800** Fax **01384 275810** Email **info@eltafans.co.uk** Website **eltafans.com**

REVOLUTION SLC

Performance Range Curves

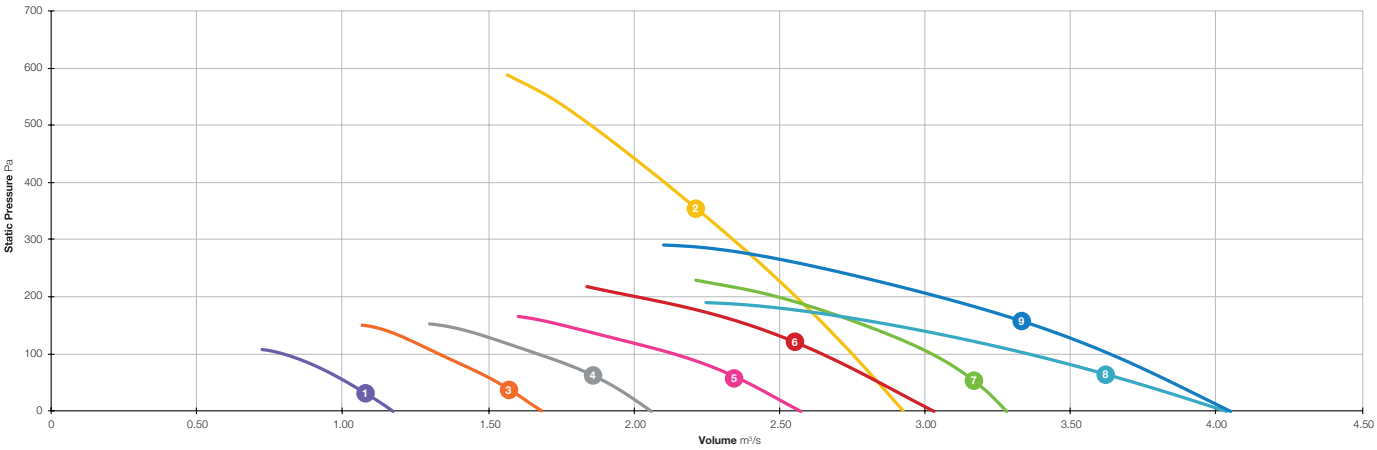

1 SLC400 / 4-1AC
2 SLC450 / 2-1AC
3 SLC450 / 4-1AC
4 SLC500 / 4A-1AC
5 SLC500 / 4B-1AC
SLC560 / 4A-1AC
7 SLC560 / 4B-1AC
8 SLC630 / 4-1AC
9 SLC630 / 4B-1AC

Elta Fans Limited has a policy of continuous product development and improvement and therefore reserves the right to supply products which may differ from those illustrated and described in this publication.
Confirmation of dimensions and data will be supplied on request.

REVOLUTION SLC

Performance Range Curves

AC

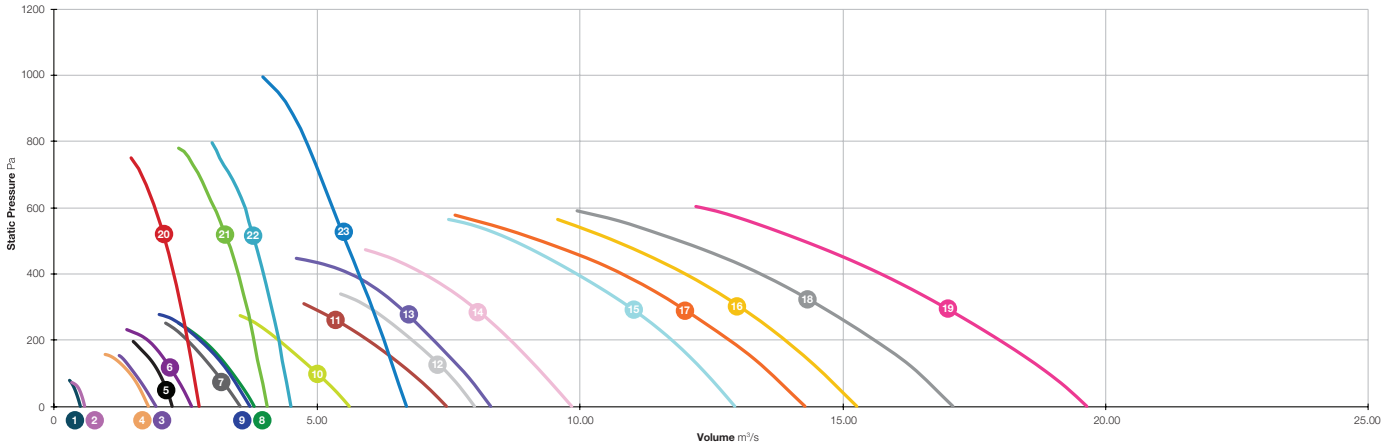

1 SLC315 / 4-3AC
2 SLC355 / 4-3AC
3 SLC450 / 4-3AC
4 SLC500 / 4A-3AC
5 SLC500 / 4B-3AC
6 SLC560 / 4A-3AC
7 SLC560 / 4B-3AC
8 SLC560 / 4C-3AC
9 SLC630 / 4A-3AC
10 SLC630 / 4B-3AC
11 SLC710 / 4A-3AC
12 SLC710 / 4B-3AC
13 SLC800 / 4A-3AC
14 SLC800 / 4B-3AC
15 SLC900 / 4A-3AC
16 SLC900 / 4B-3AC
17 SLC1000 / 4A-3AC
18 SLC1000 / 4B-3AC
19 SLC1000 / 4C-3AC
20 SLC450 / 2A-3AC
21 SLC500 / 2A-3AC
22 SLC500 / 2B-3AC
23 SLC560 / 2-3AC

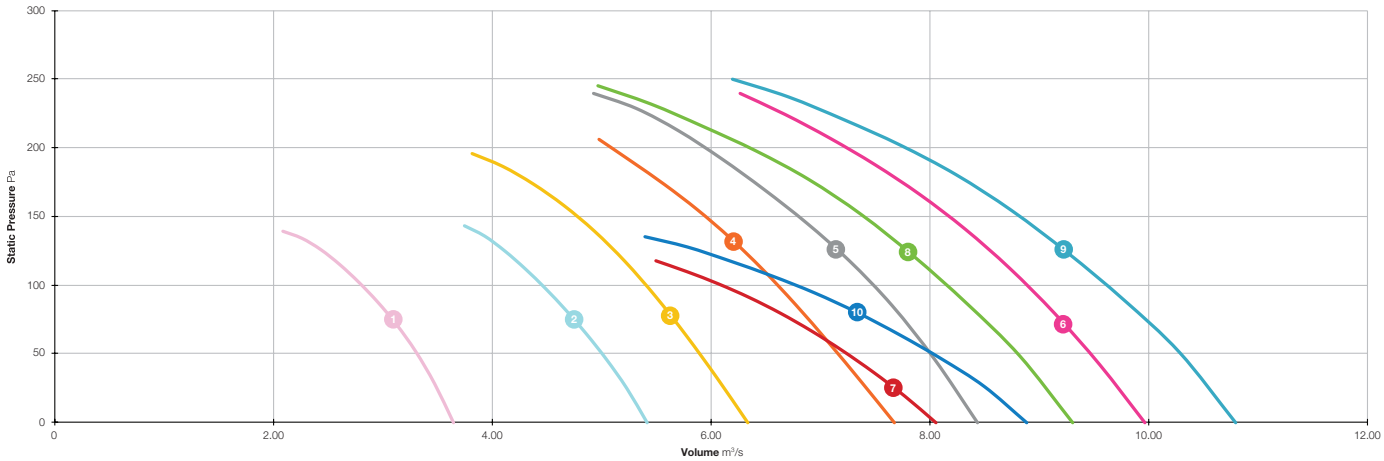

1 SLC710 / 6A-3AC
2 SLC710 / 6B-3AC
3 SLC800 / 6A-3AC
4 SLC800 / 6B-3AC
5 SLC900 / 6A-3AC
6 SLC900 / 6B-3AC
7 SLC900 / 8-3AC
8 SLC1000 / 6A-AC
9 SLC1000 / 6B-3AC
10 SLC1000 / 8-3AC

Tel **01384 275800** Fax **01384 275810** Email **info@eltafans.co.uk** Website **eltafans.com**

REVOLUTION SLC

EC

Performance Range Curves

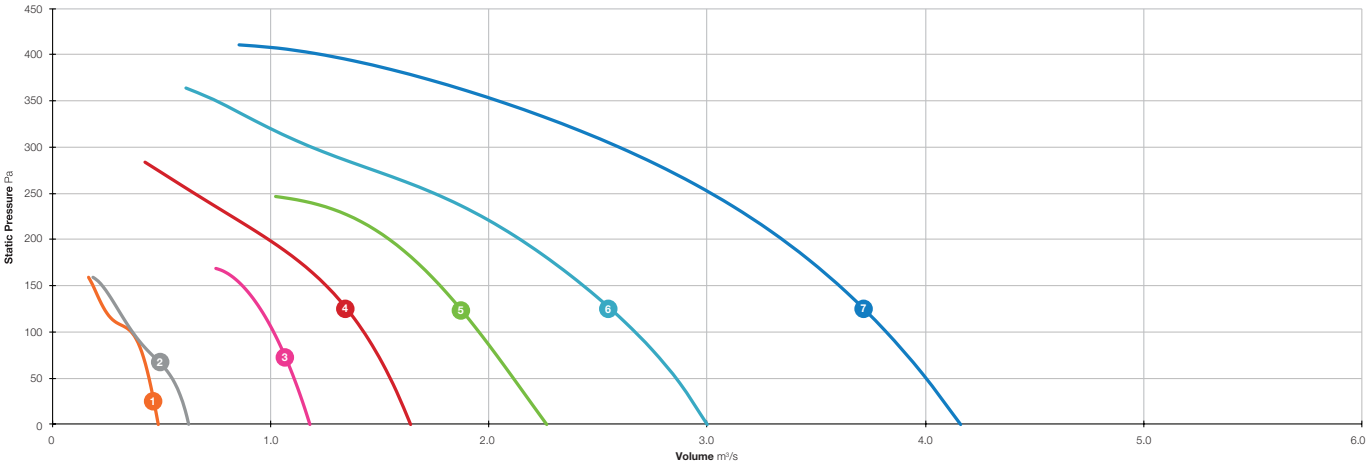

1 SLC315 - 1EC
2 SLC355 - 1EC
3 SLC400 - 1EC
SLC450 - 1EC
5 SLC500 - 1EC
6 SLC560 - 1EC
7 SLC630 - 1EC

Elta Fans Limited has a policy of continuous product development and improvement and therefore reserves the right to supply products which may differ from those illustrated and described in this publication.
Confirmation of dimensions and data will be supplied on request.

REVOLUTION SLC

Performance, SFP & Electrical Data

AC

Single Phase 220V to 240V / 50Hz

Product Code	Speed r/min	Airflow SFP	Airflow m³/s @ Static Pressure Pa												At Best Efficiency Point			Electrical Data	dBA @ 3m	
			0	25	50	75	100	150	200	250	300	350	400	500	Overall Eff %	FMEG N	Input kW	Peak Amps		
SLC400/4-1AC	1435	m³/s	1.176	1.100	1.016	0.921	0.788	-	-	-	-	-	-	-	47.7	58	0.209	0.94	Inlet	51
		W/(L/s)	0.15	0.17	0.20	0.23	0.27	-	-	-	-	-	-	-					Outlet	52
SLC450/2-1AC	2815	m³/s	2.927	2.884	2.841	2.796	2.751	2.657	2.558	2.453	2.342	2.225	2.105	1.852	53.6	58	2.050	8.80	Inlet	71
		W/(L/s)	0.49	0.51	0.54	0.57	0.59	0.65	0.70	0.76	0.82	0.88	0.94	1.10					Outlet	70
SLC450/4-1AC	1465	m³/s	1.683	1.609	1.530	1.432	1.325	-	-	-	-	-	-	-	49.6	58	0.397	1.73	Inlet	57
		W/(L/s)	0.20	0.22	0.24	0.27	0.30	-	-	-	-	-	-	-					Outlet	57
SLC500/4A-1AC	1460	m³/s	2.063	1.992	1.912	1.809	1.675	1.346	-	-	-	-	-	-	51.3	59	0.483	2.09	Inlet	53
		W/(L/s)	0.19	0.20	0.23	0.25	0.28	0.36	-	-	-	-	-	-					Outlet	53
SLC500/4B-1AC	1440	m³/s	2.574	2.483	2.391	2.283	2.141	1.760	-	-	-	-	-	-	52.2	59	0.702	3.24	Inlet	56
		W/(L/s)	0.25	0.27	0.28	0.30	0.33	0.40	-	-	-	-	-	-					Outlet	56
SLC560/4A-1AC	1415	m³/s	3.034	2.939	2.846	2.750	2.647	2.399	2.001	-	-	-	-	-	52.3	58	0.940	4.15	Inlet	60
		W/(L/s)	0.23	0.26	0.28	0.31	0.33	0.40	0.49	-	-	-	-	-					Outlet	59
SLC560/4B-1AC	1460	m³/s	3.279	3.232	3.175	3.107	3.022	2.790	2.486	-	-	-	-	-	52.5	58	1.225	5.50	Inlet	60
		W/(L/s)	0.31	0.32	0.34	0.36	0.38	0.43	0.50	-	-	-	-	-					Outlet	60
SLC630/4-1AC	1375	m³/s	4.033	3.880	3.719	3.546	3.355	2.892	-	-	-	-	-	-	52.1	58	1.120	4.99	Inlet	60
		W/(L/s)	0.25	0.27	0.28	0.31	0.33	0.39	-	-	-	-	-	-					Outlet	60
SLC630/4B-1AC	1455	m³/s	4.050	3.950	3.851	3.747	3.636	3.378	3.048	2.646	-	-	-	-	55.4	60	1.399	6.02	Inlet	61
		W/(L/s)	0.24	0.27	0.30	0.32	0.35	0.40	0.47	0.55	-	-	-	-					Outlet	61

Data provided is at standard air density of 1.2 kg/m³.
Data in accordance with ErP 327/2011 of the European Parliament. Measurement category used to determine energy efficiency: D.
Peak Amps @ 230V / 1PH / 50Hz.
The overall A-weighted sound pressure level is at a distance of 3m with spherical free-field propagation. It is expressed in dB re-20μPa and is presented for comparative purposes only.

Tel **01384 275800** Fax **01384 275810** Email **info@eltafans.co.uk** Website **eltafans.com**

REVOLUTION SLC

Performance, SFP & Electrical Data

AC

Three Phase 380V to 415V / 50Hz

Product Code	Speed r/min	Airflow SFP	Airflow m³/s @ Static Pressure Pa												At Best Efficiency Point			Electrical Data			dBA @ 3m	
			0	25	50	75	100	150	200	250	300	350	400	500	Overall Eff %	FMEG N	Input kW	Peak Amps	SC	Δ / Y		
SLC315/4-3AC	1435	m³/s	0.503	0.460	0.405	0.326	-	-	-	-	-	-	-	-	23.3	<125W	0.122	0.31	-	Mains	Inlet	51
		W/(L/s)	0.20	0.25	0.30	0.37	-	-	-	-	-	-	-	-							Outlet	48
SLC355/4-3AC	1435	m³/s	0.592	0.550	0.492	-	-	-	-	-	-	-	-	-	27.4	<125W	0.120	0.31	-	Mains	Inlet	44
		W/(L/s)	0.17	0.20	0.24	-	-	-	-	-	-	-	-	-							Outlet	43
SLC450/2A-3AC	2895	m³/s	2.758	2.732	2.705	2.678	2.651	2.596	2.538	2.479	2.416	2.349	2.278	2.116	54.1	58	2.490	4.56	-	Mains	Inlet	73
		W/(L/s)	0.59	0.61	0.63	0.65	0.68	0.72	0.77	0.82	0.87	0.93	0.99	1.12							Outlet	72
SLC450/4-3AC	1455	m³/s	1.942	1.847	1.751	1.647	1.533	1.278	-	-	-	-	-	-	49.8	58	0.491	0.97	-	Mains	Inlet	56
		W/(L/s)	0.22	0.25	0.27	0.30	0.32	0.38	-	-	-	-	-	-							Outlet	55
SLC500/2A-3AC	2920	m³/s	4.050	4.018	3.986	3.955	3.925	3.864	3.802	3.737	3.668	3.592	3.508	3.304	55.4	58	3.937	7.06	-	Mains	Inlet	70
		W/(L/s)	0.71	0.74	0.76	0.79	0.81	0.85	0.89	0.93	0.98	1.03	1.08	1.21							Outlet	69
SLC500/2B-3AC	2920	m³/s	4.508	4.482	4.455	4.426	4.397	4.334	4.268	4.200	4.130	4.058	3.983	3.822	56.2	58	5.192	8.89	-	Mains	Inlet	71
		W/(L/s)	0.91	0.92	0.94	0.96	0.98	1.02	1.06	1.10	1.14	1.18	1.23	1.32							Outlet	71
SLC500/4A-3AC	1435	m³/s	1.804	1.728	1.650	1.558	1.442	1.079	-	-	-	-	-	-	49.4	58	0.390	0.96	-	Mains	Inlet	53
		W/(L/s)	0.17	0.19	0.21	0.24	0.27	0.36	-	-	-	-	-	-							Outlet	53
SLC500/4B-3AC	1450	m³/s	2.243	2.196	2.141	2.075	1.999	1.788	-	-	-	-	-	-	51.1	58	0.689	1.47	-	Mains	Inlet	55
		W/(L/s)	0.24	0.26	0.28	0.30	0.33	0.39	-	-	-	-	-	-							Outlet	55
SLC560/2-3AC	2950	m³/s	6.701	6.645	6.591	6.538	6.486	6.382	6.274	6.163	6.046	5.925	5.799	5.545	58.9	59	8.420	13.90	-	Mains	Inlet	77
		W/(L/s)	0.96	0.98	1.00	4.02	1.05	1.09	1.13	1.18	1.23	1.28	1.33	1.44							Outlet	77
SLC560/4A-3AC	1450	m³/s	2.612	2.540	2.459	2.370	2.275	2.066	1.788	-	-	-	-	-	56.0	63	0.760	1.61	-	Mains	Inlet	59
		W/(L/s)	0.20	0.22	0.25	0.27	0.30	0.35	0.42	-	-	-	-	-							Outlet	58
SLC560/4B-3AC	1470	m³/s	3.536	3.431	3.322	3.208	3.089	2.833	2.547	2.167	-	-	-	-	54.3	60	1.240	2.36	-	Mains	Inlet	60
		W/(L/s)	0.27	0.29	0.32	0.34	0.37	0.43	0.49	0.57	-	-	-	-							Outlet	60
SLC560/4C-3AC	1460	m³/s	3.799	3.710	3.610	3.503	3.389	3.141	2.827	2.383	-	-	-	-	52.8	58	1.497	3.09	-	Mains	Inlet	60
		W/(L/s)	0.33	0.35	0.38	0.40	0.42	0.47	0.53	0.62	-	-	-	-							Outlet	60
SLC630/4A-3AC	1475	m³/s	3.723	3.625	3.523	3.434	3.330	3.081	2.764	2.378	-	- -	-	-	58.3	64	1.130	2.36	-	Mains	Inlet	64
		W/(L/s)	0.22	0.24	0.26	0.28	0.30	0.36	0.43	0.51	-	-	-	-							Outlet	64
SLC630/4B-3AC	1460	m³/s	5.623	5.489	5.342	5.182	5.013	4.656	4.285	3.864	-	-	-	-	57.0	61	2.240	4.56	-	Mains	Inlet	66
		W/(L/s)	0.37	0.38	0.40	0.42	0.45	0.50	0.56	0.62	-	-	-	-							Outlet	67
SLC710/4A-3AC	1440	m³/s	7.459	7.309	7.149	6.977	6.794	6.400	5.965	5.470	4.873	-	-	-	60.4	63	3.370	6.17	-	Mains	Inlet	71
		W/(L/s)	0.37	0.39	0.41	0.44	0.46	0.51	0.56	0.62	0.69	-	-	-							Outlet	71
SLC710/4B-3AC	1460	m³/s	8.000	7.890	7.770	7.630	7.490	7.170	6.810	6.430	5.980	-	-	-	59.0	61	4.460	8.12	-	Mains	Inlet	73
		W/(L/s)	0.52	0.53	0.54	0.56	0.58	0.61	0.65	0.69	0.74	-	-	-							Outlet	73
SLC710/6A-3AC	910	m³/s	3.640	3.490	3.310	3.080	2.800	-	-	-	-	-	-	-	53.4	60	0.700	1.49	-	Mains	Inlet	60
		W/(L/s)	0.14	0.16	0.18	0.21	0.24	-	-	-	-	-	-	-							Outlet	60
SLC710/6B-3AC	940	m³/s	5.420	5.230	5.000	4.750	4.450	-	-	-	-	-	-	-	53.6	58	1.470	3.71	-	Mains	Inlet	63
		W/(L/s)	0.26	0.27	0.29	0.31	0.33	-	-	-	-	-	-	-							Outlet	63
SLC800/4A-3AC	1465	m³/s	8.300	8.190	8.080	7.950	7.810	7.510	7.210	6.900	6.560	6.170	5.630	-	63.8	66	4.170	8.12	54.00	Mains	Inlet	70
		W/(L/s)	0.37	0.38	0.40	0.42	0.44	0.48	0.53	0.58	0.63	0.70	0.78	-							Outlet	69
SLC800/4B-3AC	1460	m³/s	9.840	9.700	9.560	9.420	9.280	8.980	8.670	8.340	7.970	7.540	7.030	-	62.7	64	6.000	10.50	77.00	Mains	Inlet	75
		W/(L/s)	0.47	0.49	0.50	0.52	0.54	0.58	0.62	0.67	0.72	0.78	0.85	-							Outlet	69

Data provided is at standard air density of 1.2 kg/m³.
Data in accordance with ErP 327/2011 of the European Parliament. Measurement category used to determine energy efficiency: D.
Peak Amps @ 400V / 3PH / 50Hz.
The overall A-weighted sound pressure level is at a distance of 3m with spherical free-field propagation. It is expressed in dB re-20μPa and is presented for comparative purposes only.

Elta Fans Limited has a policy of continuous product development and improvement and therefore reserves the right to supply products which may differ from those illustrated and described in this publication.
Confirmation of dimensions and data will be supplied on request.

REVOLUTION SLC

Performance, SFP & Electrical Data

AC

Three Phase 380V to 415V / 50Hz

Product Code	Speed r/min	Airflow SFP	Airflow m³/s @ Static Pressure Pa												At Best Efficiency Point			Electrical Data			dBA @ 3m	
			0	25	50	75	100	150	200	250	300	350	400	500	Overall Eff %	FMEG N	Input kW	Peak Amps	SC Amps	Δ / Y		
SLC800/6A-3AC	940	m³/s	6.330	6.120	5.890	5.660	5.410	4.780	-	-	-	-	-	-	56.9	61	1.760	3.71	19.00	Mains	Inlet	59
		W/(L/s)	0.21	0.23	0.25	0.28	0.30	0.36	-	-	-	-	-	-							Outlet	60
SLC800/6B-3AC	955	m³/s	7.670	7.420	7.160	6.890	6.610	5.950	-	-	-	-	-	-	54.7	58	2.570	5.94	42.00	Mains	Inlet	61
		W/(L/s)	0.29	0.31	0.33	0.35	0.38	0.43	-	-	-	-	-	-							Outlet	63
SLC900/4A-3AC	1465	m³/s	12.940	12.810	12.670	12.530	12.390	12.080	11.750	11.370	10.940	10.460	9.940	8.740	68.7	69	7.740	14.10	-	Mains	Inlet	74
		W/(L/s)	0.50	0.51	0.52	0.54	0.55	0.58	0.61	0.65	0.70	0.75	0.80	0.92							Outlet	74
SLC900/4B-3AC	1470	m³/s	15.250	15.100	14.940	14.780	14.620	14.260	13.890	13.480	13.040	12.540	11.990	10.640	66.0	66	11.080	21.20	-	Mains	Inlet	75
		W/(L/s)	0.66	0.67	0.68	0.70	0.71	0.74	0.77	0.80	0.84	0.88	0.93	1.05							Outlet	75
SLC900/6A-3AC	955	m³/s	8.430	8.220	8.000	7.760	7.480	6.790	5.940	-	-	-	-	-	62.7	66	2.450	5.94	-	Mains	Inlet	65
		W/(L/s)	0.23	0.25	0.26	0.28	0.30	0.35	0.41	-	-	-	-	-							Outlet	65
SLC900/6B-3AC	960	m³/s	9.960	9.730	9.470	9.190	8.890	8.180	7.250	-	-	-	-	-	59.9	62	3.450	7.30	-	Mains	Inlet	66
		W/(L/s)	0.31	0.32	0.34	0.35	0.37	0.42	0.48	-	-	-	-	-							Outlet	65
SLC900/8-3AC	700	m³/s	8.050	7.680	7.240	6.740	6.100	-	-	-	-	-	-	-	53.8	58	1.790	4.09	-	Mains	Inlet	59
		W/(L/s)	0.21	0.22	0.24	0.26	0.29	-	-	-	-	-	-	-							Outlet	59
SLC1000/4A-3AC	1455	m³/s	14.300	14.160	14.000	13.840	13.660	13.270	12.850	12.400	11.920	11.400	10.810	9.240	68.7	69	8.320	14.10	102.00	Mains	Inlet	81
		W/(L/s)	0.38	0.40	0.41	0.43	0.45	0.50	0.55	0.59	0.64	0.69	0.75	0.89							Outlet	81
SLC1000/4B-3AC	1470	m³/s	17.090	16.950	16.800	16.630	16.450	16.040	15.590	15.100	14.580	14.030	13.420	11.860	67.1	67	11.060	21.20	-	Mains	Inlet	82
		W/(L/s)	0.51	0.52	0.54	0.55	0.57	0.61	0.65	0.69	0.74	0.79	0.84	0.97							Outlet	80
SLC1000/4C-3AC	1465	m³/s	19.630	19.470	19.290	19.100	18.890	18.450	17.960	17.450	16.910	16.330	15.700	14.210	66.4	66	14.980	28.70	-	Mains	Inlet	81
		W/(L/s)	0.66	0.68	0.69	0.70	0.72	0.75	0.79	0.83	0.87	0.92	0.97	1.08							Outlet	81
SLC1000/6A-3AC	955	m³/s	9.300	9.080	8.810	8.490	8.160	7.400	6.360	-	-	-	-	-	62.7	66	2.510	5.94	42.00	Mains	Inlet	77
		W/(L/s)	0.18	0.20	0.22	0.24	0.27	0.32	0.39	-	-	-	-	-							Outlet	76
SLC1000/6B-3AC	960	m³/s	10.790	10.570	10.290	9.970	9.620	8.820	7.780	-	-	-	-	-	62.4	65	2.510	7.30	-	Mains	Inlet	72
		W/(L/s)	0.22	0.24	0.26	0.28	0.31	0.36	0.43	-	-	-	-	-							Outlet	72
SLC1000/8-3AC	700	m³/s	8.880	8.520	8.030	7.460	6.770	-	-	-	-	-	-	-	57.8	62	1.730	4.09	-	Mains	Inlet	64
		W/(L/s)	0.16	0.18	0.20	0.22	0.25	-	-	-	-	-	-	-							Outlet	63

Data provided is at standard air density of 1.2 kg/m³.
Data in accordance with ErP 327/2011 of the European Parliament. Measurement category used to determine energy efficiency: D.
Peak Amps @ 400V / 3PH / 50Hz.
The overall A-weighted sound pressure level is at a distance of 3m with spherical free-field propagation. It is expressed in dB re-20μPa and is presented for comparative purposes only.

REVOLUTION SLC

Performance, SFP & Electrical Data

EC

Single Phase 220V to 277V / 50Hz or 60Hz

Product Code	Control Voltage V	Speed r/min	Airflow SFP	Airflow m³/s @ Static Pressure Pa								At Best Efficiency Point			Electrical Data	dBA @ 3m	
				0	25	50	75	100	150	200	250	Overall Eff %	FMEG N	Input kW	Peak Amps		
SLC315-1EC	10	1775	m³/s	0.487	0.467	0.444	0.416	0.363	0.188	-	-	45.2	<125W	0.106	0.92	Inlet	46
			W/(L/s)	0.17	0.19	0.21	0.24	0.29	0.56	-	-					Outlet	47
	8	1410	m³/s	0.389	0.357	0.323	0.206	0.136	-	-	-	39.0		0.063	0.57	Inlet	41
			W/(L/s)	0.13	0.16	0.19	0.29	0.46	-	-	-					Outlet	41
	5	805	m³/s	0.214	0.118	-	-	-	-	-	-	20.1		0.022	0.23	Inlet	28
			W/(L/s)	0.10	0.19	-	-	-	-	-	-					Outlet	29
	2	200	m³/s	0.055	-	-	-	-	-	-	-	0.8		0.007	0.10	Inlet	32
			W/(L/s)	0.10	-	-	-	-	-	-	-					Outlet	31
SLC355-1EC	10	1790	m³/s	0.626	0.596	0.549	0.458	0.367	0.230	-	-	41.3	<125W	0.112	1.09	Inlet	53
			W/(L/s)	0.14	0.16	0.20	0.25	0.32	0.58	-	-					Outlet	53
	8	1395	m³/s	0.487	0.450	0.336	0.242	0.175	-	-	-	36.9		0.063	0.65	Inlet	45
			W/(L/s)	0.11	0.13	0.20	0.29	0.43	-	-	-					Outlet	46
	5	810	m³/s	0.275	0.137	-	-	-	-	-	-	18.5		0.024	0.27	Inlet	34
			W/(L/s)	0.08	0.19	-	-	-	-	-	-					Outlet	36
	2	225	m³/s	0.068	-	-	-	-	-	-	-	1.3		0.008	0.11	Inlet	36
			W/(L/s)	0.11	-	-	-	-	-	-	-					Outlet	39
SLC400-1EC	10	1815	m³/s	1.178	1.144	1.106	1.063	1.013	0.870	-	-	61.1	70	0.285	2.54	Inlet	55
			W/(L/s)	0.18	0.20	0.22	0.24	0.27	0.33	-	-					Outlet	57
	8	1395	m³/s	0.904	0.855	0.792	0.698	0.492	-	-	-	54.1		0.136	1.32	Inlet	49
			W/(L/s)	0.12	0.14	0.16	0.20	0.27	-	-	-					Outlet	50
	5	795	m³/s	0.505	0.393	-	-	-	-	-	-	39.8		0.036	0.39	Inlet	42
			W/(L/s)	0.06	0.09	-	-	-	-	-	-					Outlet	43
	2	205	m³/s	0.112	-	-	-	-	-	-	-	2.6		0.007	0.11	Inlet	45
			W/(L/s)	0.05	-	-	-	-	-	-	-					Outlet	47
SLC450-1EC	10	1805	m³/s	1.642	1.598	1.548	1.492	1.427	1.255	0.990	0.650	61.7	70	0.424	3.65	Inlet	59
			W/(L/s)	0.18	0.20	0.23	0.26	0.28	0.34	0.44	0.63					Outlet	59
	8	1410	m³/s	1.267	1.211	1.143	1.058	0.939	0.487	-	-	59.7		0.215	1.99	Inlet	53
			W/(L/s)	0.12	0.15	0.17	0.20	0.23	0.43	-	-					Outlet	53
	5	810	m³/s	0.696	0.601	0.295	-	-	-	-	-	46.0		0.053	0.56	Inlet	46
			W/(L/s)	0.06	0.09	0.18	-	-	-	-	-					Outlet	46
	2	215	m³/s	0.179	-	-	-	-	-	-	-	5.0		0.009	0.13	Inlet	42
			W/(L/s)	0.04	-	-	-	-	-	-	-					Outlet	45
SLC500-1EC	10	1790	m³/s	2.263	2.186	2.110	2.033	1.953	1.776	1.545	-	67.5	75	0.591	4.63	Inlet	59
			W/(L/s)	0.16	0.20	0.22	0.25	0.27	0.33	0.40	-					Outlet	59
	8	1410	m³/s	1.771	1.677	1.578	1.471	1.350	-	-	-	64.4		0.304	2.58	Inlet	58
			W/(L/s)	0.11	0.14	0.17	0.19	0.22	-	-	-					Outlet	58
	5	805	m³/s	0.949	0.844	0.570	-	-	-	-	-	56.0		0.074	0.75	Inlet	43
			W/(L/s)	0.06	0.08	0.13	-	-	-	-	-					Outlet	44
	2	240	m³/s	0.269	-	-	-	-	-	-	-	8.4		0.009	0.14	Inlet	38
			W/(L/s)	0.08	-	-	-	-	-	-	-					Outlet	38

Data provided is at standard air density of 1.2 kg/m³.
Data in accordance with ErP 327/2011 of the European Parliament. Measurement category used to determine energy efficiency: D.
A variable speed drive is integrated within the fan.
Peak Amps @ 230V / 1PH / 50Hz.
The overall A-weighted sound pressure level is at a distance of 3m with spherical free-field propagation. It is expressed in dB re-20μPa and is presented for comparative purposes only.

Elta Fans Limited has a policy of continuous product development and improvement and therefore reserves the right to supply products which may differ from those illustrated and described in this publication.
Confirmation of dimensions and data will be supplied on request.

REVOLUTION SLC

Performance, SFP & Electrical Data

EC

Single Phase 220V to 277V / 50Hz or 60Hz

Product Code	Control Voltage V	Speed r/min	Airflow SFP	Airflow m³/s @ Static Pressure Pa											At Best Efficiency Point			Electrical Data	dBA @ 3m	
				0	25	50	75	100	150	200	250	300	350	400	Overall Eff %	FMEG N	Input kW	Peak Amps		
SLC560-1EC	10	1790	m³/s	**3.001**	**2.935**	**2.859**	**2.771**	**2.671**	**2.434**	**2.145**	**1.750**	**1.187**	**0.750**	-	68.3	75	0.819	6.45	Inlet	63
			W/(L/s)	0.23	0.23	0.25	0.26	0.28	0.33	0.40	0.49	0.69	1.07	-					Outlet	63
	8	1410	m³/s	**2.331**	**2.240**	**2.137**	**2.016**	**1.870**	**1.434**	**0.742**	-	-	-	-	67.7		0.416	3.50	Inlet	58
			W/(L/s)	0.14	0.16	0.17	0.20	0.22	0.30	0.55	-	-	-	-					Outlet	57
	5	805	m³/s	**1.300**	**1.145**	**0.827**	-	-	-	-	-	-	-	-	58.5		0.097	0.99	Inlet	47
			W/(L/s)	0.06	0.08	0.12	-	-	-	-	-	-	-	-					Outlet	47
	2	230	m³/s	**0.331**	-	-	-	-	-	-	-	-	-	-	11.1		0.011	0.14	Inlet	39
			W/(L/s)	0.03	-	-	-	-	-	-	-	-	-	-					Outlet	41
SLC630-1EC	10	1800	m³/s	**4.159**	**4.083**	**4.001**	**3.913**	**3.819**	**3.605**	**3.344**	**3.018**	**2.598**	**2.046**	**1.246**	78.3	84	1.236	9.49	Inlet	66
			W/(L/s)	0.24	0.25	0.26	0.27	0.29	0.32	0.37	0.43	0.50	0.61	0.95					Outlet	67
	8	1415	m³/s	**3.313**	**3.194**	**3.066**	**2.927**	**2.774**	**2.407**	**1.877**	-	-	-	-	78.3		0.619	4.86	Inlet	63
			W/(L/s)	0.14	0.16	0.17	0.19	0.21	0.26	0.34	-	-	-	-					Outlet	63
	5	810	m³/s	**1.819**	**1.646**	**1.364**	**0.709**	**-**	-	-	-	-	-	-	72.3		0.132	1.17	Inlet	49
			W/(L/s)	0.05	0.07	0.10	0.17	-	-	-	-	-	-	-					Outlet	50
	2	250	m³/s	**0.540**	-	-	-	-	-	-	-	-	-	-	24.9		0.011	0.14	Inlet	39
			W/(L/s)	0.01	-	-	-	-	-	-	-	-	-	-					Outlet	42

Data provided is at standard air density of 1.2 kg/m³.
Data in accordance with ErP 327/2011 of the European Parliament. Measurement category used to determine energy efficiency: D.
A variable speed drive is integrated within the fan.
Peak Amps @ 230V / 1PH / 50Hz.
The overall A-weighted sound pressure level is at a distance of 3m with spherical free-field propagation. It is expressed in dB re-20μPa and is presented for comparative purposes only.

REVOLUTION SLC

Sound Data

AC

Single Phase 220V to 240V / 50Hz

Product Code		Sound Power Level dBW @ Octave Band Hz								Total dB
		63Hz	125Hz	250Hz	500Hz	1kHz	2kHz	4kHz	8kHz	
SLC400/4-1AC	Inlet	75	77	70	69	65	65	60	55	80
	Outlet	76	75	71	70	65	66	61	56	80
SLC450/2-1AC	Inlet	90	87	90	90	86	84	81	78	96
	Outlet	91	86	89	85	85	84	81	79	95
SLC450/4-1AC	Inlet	79	81	75	73	72	70	67	63	85
	Outlet	80	81	74	73	72	70	67	64	85
SLC500/4A-1AC	Inlet	71	76	71	68	68	68	65	59	79
	Outlet	72	76	70	67	67	68	65	61	79
SLC500/4B-1AC	Inlet	74	79	70	71	71	70	68	63	82
	Outlet	74	79	71	71	70	71	69	66	82
SLC560/4A-1AC	Inlet	74	73	78	75	74	75	73	66	83
	Outlet	76	73	78	74	74	74	72	65	83
SLC560/4B-1AC	Inlet	77	74	80	75	75	74	72	66	85
	Outlet	79	73	78	75	75	74	72	67	84
SLC630/4-1AC	Inlet	75	81	73	76	74	75	73	69	85
	Outlet	79	80	73	75	74	75	73	71	85
SLC630/4B-1AC	Inlet	78	73	77	77	75	76	74	70	85
	Outlet	82	74	78	76	75	76	74	72	86

Data provided at standard air density of 1.2 kg/m³.
Tests and preparation of the sound data have been carried out in accordance with BS 848 Part 2:1985 at 50% peak pressure.
The Sound Power Level Spectra are in dB re-1pW.

Elta Fans Limited has a policy of continuous product development and improvement and therefore reserves the right to supply products which may differ from those illustrated and described in this publication.
Confirmation of dimensions and data will be supplied on request.

REVOLUTION SLC

Sound Data

AC

Three Phase 380V to 415V / 50Hz

Product Code	Speed r/min		Sound Power Level dBW @ Octave Band Hz								Total dB
			63Hz	125Hz	250Hz	500Hz	1kHz	2kHz	4kHz	8kHz	
SLC315/4-3AC	1435	Inlet	64	71	60	60	71	55	50	44	75
		Outlet	65	71	60	68	64	54	50	45	74
SLC355/4-3AC	1435	Inlet	66	71	60	58	60	59	54	47	73
		Outlet	68	68	60	57	58	58	53	47	72
SLC450/2A-3AC	2895	Inlet	91	87	85	91	88	87	84	81	97
		Outlet	91	86	83	89	86	87	84	81	96
SLC450/4-3AC	1455	Inlet	79	81	73	75	71	68	65	63	84
		Outlet	80	81	73	71	70	68	65	64	84
SLC500/2A-3AC	2920	Inlet	83	83	78	90	84	83	81	78	93
		Outlet	86	84	79	85	84	83	81	78	92
SLC500/2B-3AC	2920	Inlet	87	85	80	89	86	84	83	78	94
		Outlet	89	87	81	86	87	85	84	79	95
SLC500/4A-3AC	1435	Inlet	68	69	66	67	68	68	66	60	76
		Outlet	70	69	66	66	67	69	66	61	76
SLC500/4B-3AC	1450	Inlet	73	68	71	71	70	69	67	61	79
		Outlet	73	68	71	70	71	69	67	63	79
SLC560/2-3AC	2950	Inlet	92	89	85	96	91	91	89	85	100
		Outlet	95	91	84	93	91	92	90	86	100
SLC560/4A-3AC	1450	Inlet	76	69	79	74	73	73	71	65	83
		Outlet	78	69	78	72	72	73	70	65	83
SLC560/4B-3AC	1470	Inlet	79	72	80	76	74	74	71	67	85
		Outlet	81	73	79	78	74	74	72	69	86
SLC560/4C-3AC	1460	Inlet	79	74	81	77	75	73	71	66	85
		Outlet	81	74	80	76	76	73	71	68	86
SLC630/4A-3AC	1475	Inlet	79	71	79	79	78	79	76	71	86
		Outlet	82	73	78	79	78	79	76	72	87
SLC630/4B-3AC	1460	Inlet	84	81	84	82	81	80	77	73	90
		Outlet	89	84	84	83	81	81	78	75	93
SLC710/4A-3AC	1440	Inlet	87	84	90	89	87	84	81	77	95
		Outlet	92	89	89	88	86	85	81	79	97
SLC710/4B-3AC	1460	Inlet	92	88	91	90	90	86	83	80	98
		Outlet	95	91	90	89	89	86	83	82	99
SLC710/6A-3AC	910	Inlet	73	76	76	75	76	75	71	65	83
		Outlet	79	76	74	74	75	75	71	66	84
SLC710/6B-3AC	940	Inlet	84	83	81	79	79	76	73	69	89
		Outlet	87	85	84	79	78	76	74	72	91
SLC800/4A-3AC	1465	Inlet	82	77	89	88	82	81	82	82	93
		Outlet	85	80	87	85	83	82	82	82	93
SLC800/4B-3AC	1460	Inlet	91	85	97	92	90	88	86	85	100
		Outlet	88	82	85	83	84	83	81	80	93
SLC800/6A-3AC	940	Inlet	74	69	79	74	73	72	71	67	83
		Outlet	78	72	80	77	74	74	72	70	85

Data provided at standard air density of 1.2 kg/m³.
Tests and preparation of the sound data have been carried out in accordance with BS 848 Part 2:1985 at 50% peak pressure.
The Sound Power Level Spectra are in dB re-1pW.

Tel **01384 275800** Fax **01384 275810** Email **info@eltafans.co.uk** Website **eltafans.com**

REVOLUTION SLC

Sound Data

AC

Three Phase 380V to 415V / 50Hz

Product Code	Speed r/min		Sound Power Level dBW @ Octave Band Hz								Total dB
			63Hz	125Hz	250Hz	500Hz	1kHz	2kHz	4kHz	8kHz	
SLC800/6B-3AC	955	Inlet	77	72	78	80	75	73	71	69	85
		Outlet	82	75	77	83	76	75	74	73	87
SLC900/4A-3AC	1465	Inlet	93	88	95	88	89	88	86	84	99
		Outlet	92	87	91	87	88	88	86	85	98
SLC900/4B-3AC	1470	Inlet	97	93	94	90	91	89	87	82	101
		Outlet	100	95	93	89	91	89	88	84	103
SLC900/6A-3AC	955	Inlet	83	77	84	82	78	78	78	73	89
		Outlet	83	76	82	82	78	78	77	74	89
SLC900/6B-3AC	960	Inlet	84	79	84	82	80	80	77	74	90
		Outlet	86	79	82	81	80	79	78	76	90
SLC900/8-3AC	700	Inlet	80	78	77	75	74	74	71	67	85
		Outlet	81	77	75	75	74	73	72	69	85
SLC1000/4A-3AC	1455	Inlet	96	92	95	94	96	96	92	89	103
		Outlet	98	92	94	94	97	95	92	88	104
SLC1000/4B-3AC	1470	Inlet	102	99	99	98	97	95	92	89	107
		Outlet	96	92	94	95	96	94	93	90	103
SLC1000/4C-3AC	1465	Inlet	97	93	98	96	97	95	93	90	105
		Outlet	100	96	97	96	97	95	94	91	105
SLC1000/6A-3AC	955	Inlet	80	78	92	95	93	90	85	80	99
		Outlet	82	78	90	94	91	90	85	81	98
SLC1000/6B-3AC	960	Inlet	84	81	87	87	87	86	85	80	94
		Outlet	87	83	86	86	86	86	85	81	94
SLC1000/8-3AC	700	Inlet	78	80	79	78	79	79	76	71	87
		Outlet	83	80	78	77	77	78	76	73	88

Data provided at standard air density of 1.2 kg/m³.
Tests and preparation of the sound data have been carried out in accordance with BS 848 Part 2:1985 at 50% peak pressure.
The Sound Power Level Spectra are in dB re-1pW.

Elta Fans Limited has a policy of continuous product development and improvement and therefore reserves the right to supply products which may differ from those illustrated and described in this publication.
Confirmation of dimensions and data will be supplied on request.

REVOLUTION SLC

Sound Data

EC

Single Phase 220V to 277V / 50Hz or 60Hz

Product Code	Control Voltage V		Sound Power Level dBW @ Octave Band Hz								Total dB
			63Hz	125Hz	250Hz	500Hz	1kHz	2kHz	4kHz	8kHz	
SLC315-1EC	10	Inlet	65	68	71	60	60	58	56	56	74
		Outlet	68	69	73	60	59	59	56	58	76
	8	Inlet	61	69	56	53	55	54	50	53	70
		Outlet	64	69	58	55	54	54	50	57	71
	5	Inlet	58	49	43	40	42	45	35	39	59
		Outlet	59	50	45	41	42	45	35	45	60
	2	Inlet	36	28	21	25	31	51	32	29	51
		Outlet	37	28	22	25	32	50	35	30	50
SLC355-1EC	10	Inlet	65	69	68	70	69	66	60	56	76
		Outlet	68	68	70	70	70	66	60	56	77
	8	Inlet	59	64	63	62	61	58	52	53	70
		Outlet	62	63	64	63	62	59	52	53	70
	5	Inlet	60	64	57	50	47	48	35	38	66
		Outlet	62	62	59	51	47	51	35	38	66
	2	Inlet	39	31	22	25	31	55	34	30	55
		Outlet	40	30	24	25	32	59	34	31	59
SLC400-1EC	10	Inlet	76	74	75	73	70	69	64	63	81
		Outlet	79	76	79	73	71	70	65	64	84
	8	Inlet	71	73	67	66	64	63	58	57	77
		Outlet	73	76	68	66	65	64	58	62	79
	5	Inlet	65	66	60	55	53	59	45	48	70
		Outlet	66	66	61	55	53	61	46	46	70
	2	Inlet	42	34	27	50	52	64	44	37	65
		Outlet	43	35	28	50	54	66	45	39	66
SLC450-1EC	10	Inlet	83	79	80	77	73	72	68	68	87
		Outlet	85	79	79	76	73	73	69	69	88
	8	Inlet	77	77	69	70	67	67	63	63	81
		Outlet	78	77	70	69	67	68	63	63	82
	5	Inlet	66	65	62	65	58	61	49	49	71
		Outlet	67	65	63	63	58	63	49	50	72
	2	Inlet	46	39	43	51	54	61	38	37	62
		Outlet	47	40	43	51	57	64	40	38	65
SLC500-1EC	10	Inlet	70	72	77	75	73	73	71	68	82
		Outlet	72	74	79	75	73	73	71	69	83
	8	Inlet	69	74	80	76	73	70	65	66	83
		Outlet	70	75	80	76	73	71	66	67	83
	5	Inlet	64	61	59	59	59	58	51	54	69
		Outlet	64	62	61	58	59	58	51	56	69
	2	Inlet	43	36	45	40	55	54	39	40	58
		Outlet	44	36	48	42	56	54	41	39	59

Data provided at standard air density of 1.2 kg/m³.
Tests and preparation of the sound data have been carried out in accordance with BS 848 Part 2:1985 at 50% peak pressure.
The Sound Power Level Spectra are in dB re-1pW.

Tel **01384 275800** Fax **01384 275810** Email **info@eltafans.co.uk** Website **eltafans.com**

REVOLUTION SLC

Sound Data

EC

Single Phase 220V to 277V / 50Hz or 60Hz

Product Code	Control Voltage V		Sound Power Level dBW @ Octave Band Hz								Total dB
			63Hz	125Hz	250Hz	500Hz	1kHz	2kHz	4kHz	8kHz	
SLC560-1EC	10	Inlet	73	74	78	79	78	77	75	73	85
		Outlet	77	74	77	79	78	78	75	74	86
	8	Inlet	68	73	69	74	72	72	69	67	80
		Outlet	72	74	69	72	72	72	69	69	81
	5	Inlet	63	61	63	63	62	61	56	54	70
		Outlet	64	62	64	62	62	61	56	56	71
	2	Inlet	47	39	45	47	55	56	40	39	59
		Outlet	48	39	42	45	57	58	43	40	61
SLC630-1EC	10	Inlet	79	78	82	82	81	81	78	76	89
		Outlet	83	79	84	80	81	81	79	77	90
	8	Inlet	73	75	75	79	78	77	74	69	85
		Outlet	77	77	75	79	79	78	74	72	86
	5	Inlet	67	65	63	63	65	65	60	55	73
		Outlet	68	65	63	64	65	65	60	57	73
	2	Inlet	49	43	41	44	57	55	40	40	60
		Outlet	49	42	44	45	55	60	44	42	62

Data provided at standard air density of 1.2 kg/m³.
Tests and preparation of the sound data have been carried out in accordance with BS 848 Part 2:1985 at 50% peak pressure.
The Sound Power Level Spectra are in dB re-1pW.

Elta Fans Limited has a policy of continuous product development and improvement and therefore reserves the right to supply products which may differ from those illustrated and described in this publication.
Confirmation of dimensions and data will be supplied on request.

REVOLUTION SLC

AC

Dimensional Data

Single & Three Phase

Product Code	Fan Dia. A	B	C	D	E	F	G	K	Weight kg
SLC315/4-3AC	315	375	300	218	8	10	355	20	16
SLC355/4-3AC	355	425	375	239	8	10	395	20	19
SLC400/4-1AC	400	475	400	262	8	12	450	20	34
SLC450/2-1AC	450	530	375	287	8	12	500	20	34
SLC450/2A-3AC	450	530	450	287	8	12	500	20	33
SLC450/4-1AC	450	530	375	287	8	12	500	20	35
SLC450/4-3AC	450	530	375	287	8	12	500	20	35
SLC500/2A-3AC	500	585	450	312	12	12	560	20	72
SLC500/2B-3AC	500	585	450	312	12	12	560	20	71
SLC500/4A-1AC	500	585	400	312	12	12	560	20	37
SLC500/4A-3AC	500	585	400	312	12	12	560	20	33
SLC500/4B-1AC	500	585	400	312	12	12	560	20	41
SLC500/4B-3AC	500	585	400	312	12	12	560	20	33
SLC560/2-3AC	560	645	570	342	12	12	620	25	96
SLC560/4A-1AC	560	645	400	342	12	12	620	20	45
SLC560/4A-3AC	560	645	400	342	12	12	620	20	40
SLC560/4B-1AC	560	645	400	342	12	12	620	20	50
SLC560/4B-3AC	560	645	400	342	12	12	620	20	44
SLC560/4C-3AC	560	645	400	342	12	12	620	20	38
SLC630/4-1AC	630	715	400	377	12	12	690	20	41
SLC630/4A-3AC	630	715	400	377	12	12	690	20	47
SLC630/4B-1AC	630	715	400	377	12	12	690	20	53
SLC630/4B-3AC	630	715	400	377	12	12	690	20	58
SLC710/4A-3AC	710	795	450	420	16	12	770	20	70
SLC710/4B-3AC	710	795	450	420	16	12	770	25	77
SLC710/6A-3AC	710	795	450	420	16	12	770	20	45
SLC710/6B-3AC	710	795	450	420	16	12	770	20	61
SLC800/4A-3AC	800	885	450	465	16	12	860	25	75
SLC800/4B-3AC	800	885	570	465	16	12	860	25	101
SLC800/6A-3AC	800	885	450	465	16	12	860	20	75
SLC800/6B-3AC	800	885	450	465	16	12	860	25	75
SLC900/4A-3AC	900	1000	570	520	16	15	970	25	134
SLC900/4B-3AC	900	1000	710	554	16	15	970	32	206
SLC900/6A-3AC	900	1000	450	520	16	15	970	25	75
SLC900/6B-3AC	900	1000	570	520	16	15	970	25	135
SLC900/8-3AC	900	1000	450	520	16	15	970	25	107
SLC1000/4A-3AC	1000	1110	590	567	16	15	1070	25	159
SLC1000/4B-3AC	1000	1110	790	606	16	15	1070	32	239
SLC1000/4C-3AC	1000	1110	790	606	16	15	1070	32	263
SLC1000/6A-3AC	1000	1110	590	567	16	15	1070	25	127
SLC1000/6B-3AC	1000	1110	590	567	16	15	1070	25	159
SLC1000/8-3AC	1000	1110	590	567	16	15	1070	25	136

Tel **01384 275800** Fax **01384 275810** Email **info@eltafans.co.uk** Website **eltafans.com**

REVOLUTION SLC

Dimensional Data

AC

Single & Three Phase

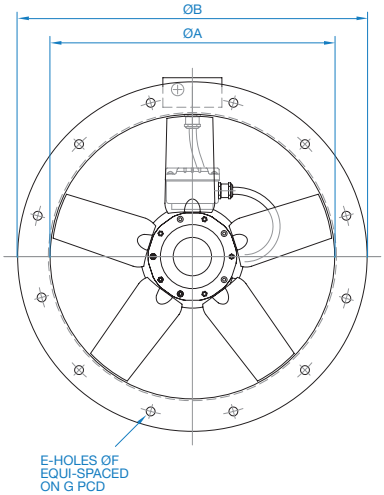

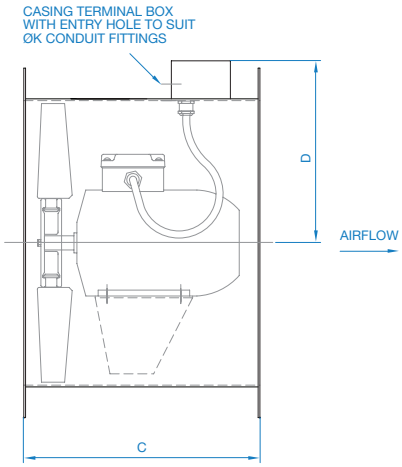

Dimensions are in mm.

Elta Fans Limited has a policy of continuous product development and improvement and therefore reserves the right to supply products which may differ from those illustrated and described in this publication.
Confirmation of dimensions and data will be supplied on request.

REVOLUTION SLC

Dimensional Data

EC

Single Phase

Product Code	Fan Dia. A	B	C	D	E	F	G	K	Weight kg
SLC315-1EC	315	375	400	229	8	10	355	20	15
SLC355-1EC	355	425	400	250	8	10	395	20	19
SLC400-1EC	400	475	400	272	8	12	450	20	25
SLC450-1EC	450	530	400	298	8	12	500	20	30
SLC500-1EC	500	585	400	323	12	12	560	20	35
SLC560-1EC	560	645	400	353	12	12	620	20	37
SLC630-1EC	630	715	400	388	12	12	690	20	37

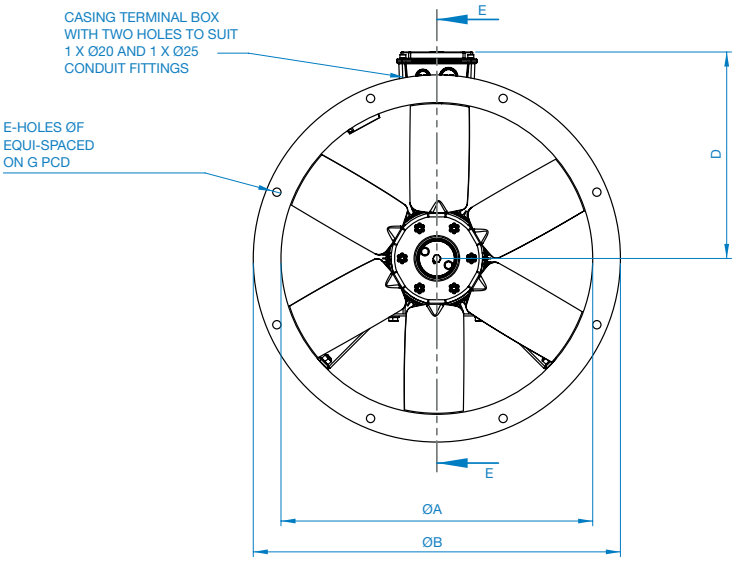

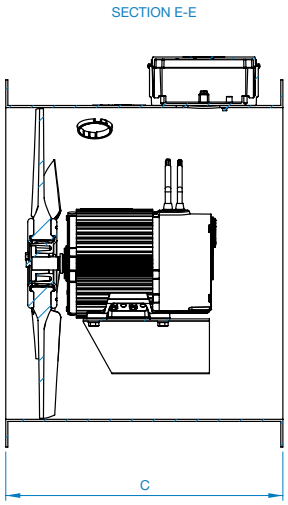

Dimensions are in mm.

Tel **01384 275800** Fax **01384 275810** Email **info@eltafans.co.uk** Website **eltafans.com**

REVOLUTION SLC

Accessories

AC

Single Phase

Product Code	Ancillary Pack*	AV Mounts (set of 4)	Bell Mouth Inlet	Flanged Damper	Flanged Silencer 1D Podded	Flanged Silencer 1D Unpodded	Flanged Silencer 2D Podded
SLC400/4-1AC	APK400SI/003	062-003	241B-0400-BELL	019-0400-STD	068-0400-1DEP	068-0400-1DENP	068-0400-2DEP
SLC450/2-1AC	APK450SI/003	062-003	241B-0450-BELL	019-0450-STD	068-0450-1DEP	068-0450-1DENP	068-0450-2DEP
SLC450/4-1AC	APK450SI/003	062-003	241B-0450-BELL	019-0450-STD	068-0450-1DEP	068-0450-1DENP	068-0450-2DEP
SLC500/4A-1AC	APK500SI/003	062-003	241B-0500-BELL	019-0500-STD	068-0500-1DEP	068-0500-1DENP	068-0500-2DEP
SLC500/4B-1AC	APK500SI/003	062-003	241B-0500-BELL	019-0500-STD	068-0500-1DEP	068-0500-1DENP	068-0500-2DEP
SLC560/4A-1AC	APK560SI/003	062-003	241B-0560-BELL	019-0560-STD	068-0560-1DEP	068-0560-1DENP	068-0560-2DEP
SLC560/4B-1AC	APK560SI/003	062-003	241B-0560-BELL	019-0560-STD	068-0560-1DEP	068-0560-1DENP	068-0560-2DEP
SLC630/4-1AC	APK630SI/003	062-003	241B-0630-BELL	019-0630-STD	068-0630-1DEP	068-0630-1DENP	068-0630-2DEP
SLC630/4B-1AC	APK630SI/003	062-003	241B-0630-BELL	019-0630-STD	068-0630-1DEP	068-0630-1DENP	068-0630-2DEP

Product Code	Flanged Silencer 2D Unpodded	Impeller Side Guard	Matching Flanges (each)	Mounting Feet (each)	Standard Ambient Flexible Connectors (each)	Transformer Controller	Wiring Diagram
SLC400/4-1AC	068-0400-2DENP	078C-0400-C	061B-0400	060B-0400	063-0400-MAN150	149-TC18	152-502
SLC450/2-1AC	068-0450-2DENP	078C-0450-C	061B-0450	060B-0450	063-0450-MAN150	-	152-502
SLC450/4-1AC	068-0450-2DENP	078C-0450-C	061B-0450	060B-0450	063-0450-MAN150	-	152-502
SLC500/4A-1AC	068-0500-2DENP	078C-0500-C	061B-0500	060B-0500	063-0500-MAN150	-	152-502
SLC500/4B-1AC	068-0500-2DENP	078C-0500-C	061B-0500	060B-0500	063-0500-MAN150	149-TC18	152-502
SLC560/4A-1AC	068-0560-2DENP	078C-0560-C	061B-0560	060B-0560	063-0560-MAN150	-	152-502
SLC560/4B-1AC	068-0560-2DENP	078C-0560-C	061B-0560	060B-0560	063-0560-MAN150	149-TC116	152-502
SLC630/4-1AC	068-0630-2DENP	078C-0630-C	061B-0630	060B-0630	063-0630-MAN200	149-TC18	152-502
SLC630/4B-1AC	068-0630-2DENP	078C-0630-C	061B-0630	060B-0630	063-0630-MAN200	149-TC116	152-502

* Consists of Flexible Connections, Matching Flanges, AV Mounts and Mounting Feet.

Elta Fans Limited has a policy of continuous product development and improvement and therefore reserves the right to supply products which may differ from those illustrated and described in this publication. Confirmation of dimensions and data will be supplied on request.

REVOLUTION SLC

Accessories

AC

Three Phase

Product Code	Ancillary Pack*	AV Mounts (set of 4)	Bell Mouth Inlet	Eltadrive Variable Speed Drive 1PH-3PH IP66	Eltadrive Variable Speed Drive 1PH-3PH IP20	Eltadrive Variable Speed Drive 3PH-3PH IP66	Eltadrive Variable Speed Drive 3PH-3PH IP20	Flanged Damper
SLC315/4-3AC	APK315SI/002	062-002	241B-0315	-	-	-	-	019-0315-STD
SLC355/4-3AC	APK350SI/002	062-002	241B-0355	-	-	-	-	019-0355-STD
SLC450/2A-3AC	APK450SI/003	062-003	241B-0450-BELL	149-ODE3-22220-1KB4Y	149-ODE3-22220-1KB42	149-ODE3-24220-3KA4Y	149-ODE3-24220-3KA42	019-0450-STD
SLC450/4-3AC	APK450SI/003	062-003	241B-0450-BELL	149-ODE3-12075-1KB1Y	149-ODE3-12075-1KB12	149-ODE3-14075-3KA1Y	149-ODE3-14075-3KA12	019-0450-STD
SLC500/2A-3AC	APK500SI/003	062-003	241B-0500-BELL	-	-	149-ODE3-24400-3KA4Y	149-ODE3-24400-3KA42	019-0500-STD
SLC500/2B-3AC	APK500SI/003	062-003	241B-0500-BELL	-	-	149-ODE3-34055-3KA4Y	149-ODE3-34055-3KA42	019-0500-STD
SLC500/4A-3AC	APK500SI/003	062-003	241B-0500-BELL	149-ODE3-12037-1KB1Y	149-ODE3-12037-1KB12	149-ODE3-14075-3KA1Y	149-ODE3-14075-3KA12	019-0500-STD
SLC500/4B-3AC	APK500SI/003	062-003	241B-0500-BELL	149-ODE3-12075-1KB1Y	149-ODE3-12075-1KB12	149-ODE3-14075-3KA1Y	149-ODE3-14075-3KA12	019-0500-STD
SLC560/2-3AC	APK560SI/003	062-003	241B-0560-BELL	-	-	149-ODE3-34075-3KA4Y	149-ODE3-34075-3KA42	019-0560-STD
SLC560/4A-3AC	APK560SI/003	062-003	241B-0560-BELL	149-ODE3-12075-1KB1Y	149-ODE3-12075-1KB12	149-ODE3-14075-3KA1Y	149-ODE3-14075-3KA12	019-0560-STD
SLC560/4B-3AC	APK560SI/003	062-003	241B-0560-BELL	149-ODE3-12150-1KB1Y	149-ODE3-12150-1KB12	149-ODE3-14150-3KA1Y	149-ODE3-14150-3KA12	019-0560-STD
SLC560/4C-3AC	APK560SI/003	062-003	241B-0560-BELL	149-ODE3-12150-1KB1Y	149-ODE3-12150-1KB12	149-ODE3-14150-3KA1Y	149-ODE3-14150-3KA12	019-0560-STD
SLC630/4A-3AC	APK630SI/003	062-003	241B-0630-BELL	149-ODE3-12150-1KB1Y	149-ODE3-12150-1KB12	149-ODE3-14150-3KA1Y	149-ODE3-14150-3KA12	019-0630-STD
SLC630/4B-3AC	APK630SI/003	062-003	241B-0630-BELL	149-ODE3-22220-1KB4Y	149-ODE3-22220-1KB42	149-ODE3-24220-3KA4Y	149-ODE3-24220-3KA42	019-0630-STD
SLC710/4A-3AC	APK710SI/004	062-004	241B-0710-BELL	-	-	149-ODE3-24400-3KA4Y	149-ODE3-24400-3KA42	019-0710-STD
SLC710/4B-3AC	APK710SI/004	062-004	241B-0710-BELL	-	-	149-ODE3-24400-3KA4Y	149-ODE3-24400-3KA42	019-0710-STD
SLC710/6A-3AC	APK710SI/003	062-003	241B-0710-BELL	149-ODE3-12075-1KB1Y	149-ODE3-12075-1KB12	149-ODE3-14075-3KA1Y	149-ODE3-14075-3KA12	019-0710-STD
SLC710/6B-3AC	APK710SI/003	062-003	241B-0710-BELL	149-ODE3-22220-1KB4Y	149-ODE3-22220-1KB42	149-ODE3-24220-3KA4Y	149-ODE3-24220-3KA42	019-0710-STD
SLC800/4A-3AC	APK800SI/004	062-004	241B-0800-BELL	-	-	149-ODE3-24400-3KA4Y	149-ODE3-24400-3KA42	019-0800-STD
SLC800/4B-3AC	APK800SI/004	062-004	241B-0800-BELL	-	-	149-ODE3-34055-3KA4Y	149-ODE3-34055-3KA42	019-0800-STD
SLC800/6A-3AC	APK800SI/003	062-003	241B-0800-BELL	149-ODE3-22220-1KB4Y	149-ODE3-22220-1KB42	149-ODE3-24220-3KA4Y	149-ODE3-24220-3KA42	019-0800-STD
SLC800/6B-3AC	APK800SI/004	062-004	241B-0800-BELL	-	-	149-ODE3-24400-3KA4Y	149-ODE3-24400-3KA42	019-0800-STD
SLC900/4A-3AC	APK900SI/005	062-005	241B-0900-BELL	-	-	149-ODE3-34075-3KA4Y	149-ODE3-34075-3KA42	019-0900-STD
SLC900/4B-3AC	APK900SI/006	062-006	241B-0900-BELL	-	-	-	149-ODE3-34110-3KA42	019-0900-STD
SLC900/6A-3AC	APK900SI/004	062-004	241B-0900-BELL	-	-	149-ODE3-24400-3KA4Y	149-ODE3-24400-3KA42	019-0900-STD
SLC900/6B-3AC	APK900SI/004	062-004	241B-0900-BELL	-	-	149-ODE3-24400-3KA4Y	149-ODE3-24400-3KA42	019-0900-STD
SLC900/8-3AC	APK900SI/005	062-005	241B-0900-BELL	149-ODE3-22220-1KB4Y	149-ODE3-22220-1KB42	149-ODE3-24220-3KA4Y	149-ODE3-24220-3KA42	019-0900-STD
SLC1000/4A-3AC	APK1000SI/005	062-005	241B-1000-BELL	-	-	149-ODE3-34075-3KA4Y	149-ODE3-34075-3KA42	019-1000-STD
SLC1000/4B-3AC	APK1000SI/006	062-006	241B-1000-BELL	-	-	-	149-ODE3-34110-3KA42	019-1000-STD
SLC1000/4C-3AC	APK1000SI/006	062-006	241B-1000-BELL	-	-	-	149-ODV-34150-IN	019-1000-STD
SLC1000/6A-3AC	APK1000SI/005	062-005	241B-1000-BELL	-	-	149-ODE3-24220-3KA4Y	149-ODE3-24220-3KA42	019-1000-STD
SLC1000/6B-3AC	APK1000SI/005	062-005	241B-1000-BELL	-	-	149-ODE3-24400-3KA4Y	149-ODE3-24400-3KA42	019-1000-STD
SLC1000/8-3AC	APK1000SI/005	062-005	241B-1000-BELL	149-ODE3-22220-1KB4Y	149-ODE3-22220-1KB42	149-ODE3-24220-3KA4Y	149-ODE3-24220-3KA42	019-1000-STD

* Consists of Flexible Connections, Matching Flanges, AV Mounts and Mounting Feet.

REVOLUTION SLC

Accessories

AC

Three Phase

Product Code	Flanged Silencer 1D Podded	Flanged Silencer 1D Unpodded	Flanged Silencer 2D Podded	Flanged Silencer 2D Unpodded	Impeller Side Guard	Matching Flanges (each)	Mounting Feet (each)	Standard Ambient Flexible Connectors (each)	Trans-former Controller	Wiring Diagram
SLC315/4-3AC	068-0315-1DEP	068-0315-1DENP	068-0315-2DEP	068-0315-2DENP	078C-0315-C	061B-0315	060B-0315	063-0315-MAN150	149-TC33	152-600
SLC355/4-3AC	068-0350-1DEP	068-0350-1DENP	068-0350-2DEP	068-0350-2DENP	078C-0350-C	061B-0355	060B-0355	063-0350-MAN150	149-TC33	152-600
SLC450/2A-3AC	068-0450-1DEP	068-0450-1DENP	068-0450-2DEP	068-0450-2DENP	078C-0450-C	061B-0450	060B-0450	063-0450-MAN150	-	152-600
SLC450/4-3AC	068-0450-1DEP	068-0450-1DENP	068-0450-2DEP	068-0450-2DENP	078C-0450-C	061B-0450	060B-0450	063-0450-MAN150	149-TC33	152-600
SLC500/2A-3AC	068-0500-1DEP	068-0500-1DENP	068-0500-2DEP	068-0500-2DENP	078C-0500-C	061B-0500	060B-0500	063-0500-MAN150	-	152-601
SLC500/2B-3AC	068-0500-1DEP	068-0500-1DENP	068-0500-2DEP	068-0500-2DENP	078C-0500-C	061B-0500	060B-0500	063-0500-MAN150	-	152-601
SLC500/4A-3AC	068-0500-1DEP	068-0500-1DENP	068-0500-2DEP	068-0500-2DENP	078C-0500-C	061B-0500	060B-0500	063-0500-MAN150	149-TC310	152-600
SLC500/4B-3AC	068-0500-1DEP	068-0500-1DENP	068-0500-2DEP	068-0500-2DENP	078C-0500-C	061B-0500	060B-0500	063-0500-MAN150	-	152-600
SLC560/2-3AC	068-0560-1DEP	068-0560-1DENP	068-0560-2DEP	068-0560-2DENP	078C-0560-C	061B-0560	060B-0560	063-0560-MAN150	-	152-601
SLC560/4A-3AC	068-0560-1DEP	068-0560-1DENP	068-0560-2DEP	068-0560-2DENP	078C-0560-C	061B-0560	060B-0560	063-0560-MAN150	-	152-600
SLC560/4B-3AC	068-0560-1DEP	068-0560-1DENP	068-0560-2DEP	068-0560-2DENP	078C-0560-C	061B-0560	060B-0560	063-0560-MAN150	-	152-600
SLC560/4C-3AC	068-0560-1DEP	068-0560-1DENP	068-0560-2DEP	068-0560-2DENP	078C-0560-C	061B-0560	060B-0560	063-0560-MAN150	-	152-600
SLC630/4A-3AC	068-0630-1DEP	068-0630-1DENP	068-0630-2DEP	068-0630-2DENP	078C-0630-C	061B-0630	060B-0630	063-0630-MAN200	-	152-600
SLC630/4B-3AC	068-0630-1DEP	068-0630-1DENP	068-0630-2DEP	068-0630-2DENP	078C-0630-C	061B-0630	060B-0630	063-0630-MAN200	-	152-600
SLC710/4A-3AC	068-0710-1DEP	068-0710-1DENP	068-0710-2DEP	068-0710-2DENP	078C-0710-C	061B-0710	060B-0710	063-0710-MAN200	-	152-600
SLC710/4B-3AC	068-0710-1DEP	068-0710-1DENP	068-0710-2DEP	068-0710-2DENP	078C-0710-C	061B-0710	060B-0710	063-0710-MAN200	-	152-601
SLC710/6A-3AC	068-0710-1DEP	068-0710-1DENP	068-0710-2DEP	068-0710-2DENP	078C-0710-C	061B-0710	060B-0710	063-0710-MAN200	149-TC33	152-600
SLC710/6B-3AC	068-0710-1DEP	068-0710-1DENP	068-0710-2DEP	068-0710-2DENP	078C-0710-C	061B-0710	060B-0710	063-0710-MAN200	-	152-600
SLC800/4A-3AC	068-0800-1DEP	068-0800-1DENP	068-0800-2DEP	068-0800-2DENP	078C-0800-C	061B-0800	060B-0800	063-0800-MAN200	-	152-601
SLC800/4B-3AC	068-0800-1DEP	068-0800-1DENP	068-0800-2DEP	068-0800-2DENP	078C-0800-C	061B-0800	060B-0800	063-0800-MAN200	-	152-601
SLC800/6A-3AC	068-0800-1DEP	068-0800-1DENP	068-0800-2DEP	068-0800-2DENP	078C-0800-C	061B-0800	060B-0800	063-0800-MAN200	-	152-600
SLC800/6B-3AC	068-0800-1DEP	068-0800-1DENP	068-0800-2DEP	068-0800-2DENP	078C-0800-C	061B-0800	060B-0800	063-0800-MAN200	-	152-601
SLC900/4A-3AC	068-0900-1DEP	068-0900-1DENP	068-0900-2DEP	068-0900-2DENP	078C-0900-C	061B-0900	060B-0900	063-0900-MAN200	-	152-601
SLC900/4B-3AC	068-0900-1DEP	068-0900-1DENP	068-0900-2DEP	068-0900-2DENP	078C-0900-C	061B-0900	060B-0900	063-0900-MAN200	-	152-601
SLC900/6A-3AC	068-0900-1DEP	068-0900-1DENP	068-0900-2DEP	068-0900-2DENP	078C-0900-C	061B-0900	060B-0900	063-0900-MAN200	-	152-601
SLC900/6B-3AC	068-0900-1DEP	068-0900-1DENP	068-0900-2DEP	068-0900-2DENP	078C-0900-C	061B-0900	060B-0900	063-0900-MAN200	-	152-601
SLC900/8-3AC	068-0900-1DEP	068-0900-1DENP	068-0900-2DEP	068-0900-2DENP	078C-0900-C	061B-0900	060B-0900	063-0900-MAN200	-	152-600
SLC1000/4A-3AC	068-1000-1DEP	068-1000-1DENP	068-1000-2DEP	068-1000-2DENP	078C-1000-C	061B-1000	060B-1000	063-1000-MAN250	-	152-601
SLC1000/4B-3AC	068-1000-1DEP	068-1000-1DENP	068-1000-2DEP	068-1000-2DENP	078C-1000-C	061B-1000	060B-1000	063-1000-MAN250	-	152-601
SLC1000/4C-3AC	068-1000-1DEP	068-1000-1DENP	068-1000-2DEP	068-1000-2DENP	078C-1000-C	061B-1000	060B-1000	063-1000-MAN250	-	152-601
SLC1000/6A-3AC	068-1000-1DEP	068-1000-1DENP	068-1000-2DEP	068-1000-2DENP	078C-1000-C	061B-1000	060B-1000	063-1000-MAN250	-	152-601
SLC1000/6B-3AC	068-1000-1DEP	068-1000-1DENP	068-1000-2DEP	068-1000-2DENP	078C-1000-C	061B-1000	060B-1000	063-1000-MAN250	-	152-601
SLC1000/8-3AC	068-1000-1DEP	068-1000-1DENP	068-1000-2DEP	068-1000-2DENP	078C-1000-C	061B-1000	060B-1000	063-1000-MAN250	-	152-600

Fan & inverter packages available

Please contact Elta Fans for more information.

Elta Fans Limited has a policy of continuous product development and improvement and therefore reserves the right to supply products which may differ from those illustrated and described in this publication. Confirmation of dimensions and data will be supplied on request.

REVOLUTION SLC

Accessories

EC

Single Phase

Product Code	Ancillary Pack*	AV Mounts (set of 4)	Bell Mouth Inlet	EC Electronic Controller	Flanged Damper	Flanged Silencer 1D Podded	Flanged Silencer 1D Unpodded
SLC315-1EC	APK315SI/002	062-002	241B-0315	149-POT-10	019-0315-STD	068-0315-1DEP	068-0315-1DENP
SLC355-1EC	APK350SI/002	062-002	241B-0355	149-POT-10	019-0355-STD	068-0350-1DEP	068-0350-1DENP
SLC400-1EC	APK400SI/003	062-003	241B-0400-BELL	149-POT-10	019-0400-STD	068-0400-1DEP	068-0400-1DENP
SLC450-1EC	APK450SI/003	062-003	241B-0450-BELL	149-POT-10	019-0450-STD	068-0450-1DEP	068-0450-1DENP
SLC500-1EC	APK500SI/003	062-003	241B-0500-BELL	149-POT-10	019-0500-STD	068-0500-1DEP	068-0500-1DENP
SLC560-1EC	APK560SI/003	062-003	241B-0560-BELL	149-POT-10	019-0560-STD	068-0560-1DEP	068-0560-1DENP
SLC630-1EC	APK630SI/003	062-003	241B-0630-BELL	149-POT-10	019-0630-STD	068-0630-1DEP	068-0630-1DENP

Product Code	Flanged Silencer 2D Podded	Flanged Silencer 2D Unpodded	Impeller Side Guard	Matching Flanges (each)	Mounting Feet (each)	Standard Ambient Flexible Connectors (each)	Wiring Diagram
SLC315-1EC	068-0315-2DEP	068-0315-2DENP	078C-0315-C	061B-0315	060B-0315	063-0315-MAN150	152-710
SLC355-1EC	068-0350-2DEP	068-0350-2DENP	078C-0350-C	061B-0355	060B-0355	063-0355-MAN150	152-710
SLC400-1EC	068-0400-2DEP	068-0400-2DENP	078C-0400-C	061B-0400	060B-0400	063-0400-MAN150	152-710
SLC450-1EC	068-0450-2DEP	068-0450-2DENP	078C-0450-C	061B-0450	060B-0450	063-0450-MAN150	152-710
SLC500-1EC	068-0500-2DEP	068-0500-2DENP	078C-0500-C	061B-0500	060B-0500	063-0500-MAN150	152-710
SLC560-1EC	068-0560-2DEP	068-0560-2DENP	078C-0560-C	061B-0560	060B-0560	063-0560-MAN150	152-710
SLC630-1EC	068-0630-2DEP	068-0630-2DENP	078C-0630-C	061B-0630	060B-0630	063-0630-MAN200	152-710

* Consists of Flexible Connections, Matching Flanges, AV Mounts and Mounting Feet.

AV MOUNTS

Accessories

- Fits directly to mounting feet
- Rubber with steel insert
- Supplied as set of 4, complete with fixings

Product Code	A	B	C	D	E	F	G	Weight kg
062-002	64	50	43	5.5	20	M6	Ø7	0.040
062-003	80	57	45	5	32	M8	12 x 9	0.102
062-004	80	57	45	5	32	M8	12 x 9	0.102
062-005	80	57	45	5	32	M8	12 x 9	0.102
062-006	95	71	60	5	45	M10	14 x 9	0.104

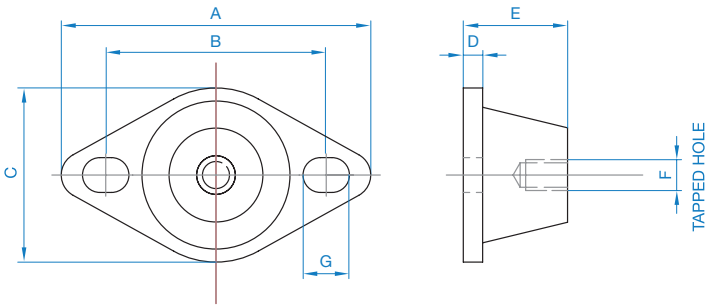

Dimensions are in mm.

Elta Fans Limited has a policy of continuous product development and improvement and therefore reserves the right to supply products which may differ from those illustrated and described in this publication.
Confirmation of dimensions and data will be supplied on request.

BELL MOUTH INLET

Accessories

- For improved airflow in end of duct applications
- Fixed directly to fan case flange
- Hot dip galvanised steel

Single Phase 220V to 240V / 50Hz or 60Hz

Product Code	Fan Dia. A	B	C	D	E	Weight kg
241B-0315*	315	380	3	58	395	2.5
241B-0355*	350	425	3	65	450	3.0
241B-0400-BELL	400	485	3	75	515	4.5
241B-0450-BELL	450	535	3	85	570	5.3
241B-0500-BELL	500	585	3	93	630	6.2
241B-0560-BELL	560	645	3	105	700	7.5
241B-0630-BELL	630	715	3	105	780	9.0
241B-0710-BELL	710	795	3	120	870	11.1
241B-0800-BELL	800	885	3	135	970	13.0
241B-0900-BELL	900	1005	3	150	1090	17.3
241B-1000-BELL	1000	1110	3	165	1200	20.0

*Inlet cone

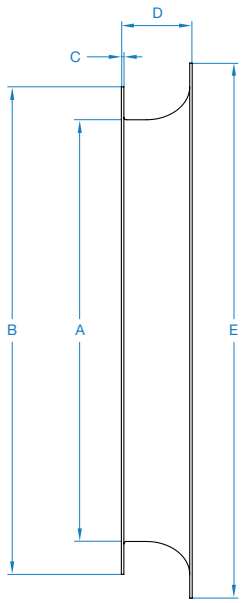

Dimensions are in mm.

Tel **01384 275800** Fax **01384 275810** Email **info@eltafans.co.uk** Website **eltafans.com**

EC ELECTRONIC CONTROLLER

Accessories

- EC type fans
- Variable speed drives (Inverters)

EC

Product Code
149-POT-10

ELTADRIVE VARIABLE SPEED DRIVES

IP20

- Up to 22kW
- Built in PI control, EMC filter (C1) & brake chopper
- Application macros for industrial fan operation
- Bluetooth® connectivity
- Controls multiple motor types: IE2, 3, 4, IM, PM, BLDC and SynRM
- Operates up to +50°C

Overview
Compact, robust and reliable general purpose drive for panel mounting.

Simply Power Up
Eltadrive E3 provides precise motor control and energy savings using the factory settings. Simply power up and the drive can immediately deliver energy savings. 14 basic parameters allow simple adjustment for your application if required, with up to 50 parameters available in total for a highly flexible performance.

Power Supply
Connects at top.

Fast Connection
5mm rising clamp terminals with captive screws.

Quick Reference
Integrated help card.

Modbus RTS & CANopen
On board as standard.

SmartStart
Rapid parameter cloning and Bluetooth® PC interface.

Motor Supply
Connects at base.

Dimensional Data

Model	Size	Height	Width	Depth	Weight kg	Fixings
IP20	1	173	83	123	1.0	4 x M5
	2	221	110	150	1.7	4 x M5
	3	261	131	175	3.2	4 x M5
	4	420	171	212	9.1	4 x M8

Dimensions in mm.

Tel **01384 275800** Fax **01384 275810** Email **info@eltafans.co.uk** Website **eltafans.com**

ELTADRIVE VARIABLE SPEED DRIVES

IP66

- Up to 7.5kW
- Conformal coating as standard
- Switched or non-switched

Overview
Enclosed drives for direct machine mounting, dust-tight and ready for washdown duty.

Dust Tight Design
Install directly on your processing equipment and be sure of protection from dust and contaminants.

Washdown Ready
With a sealed ABS enclosure and corrosion resistant heatsink, the Eltadrive E3 IP66 is ideal for high-pressure washdown applications.

Eltadrive E3 IP66 Switched
Simply wire up the drive, turn the inbuilt potentiometer and the motor will start running, allowing immediate energy savings.

Coated Heatsink as Standard
Ideal for hygiene based operations requiring washdown such as food & beverage.

Fanless Heatsink
For reliable, cost effective operation.

Local Speed Potentiometer

Run Reverse / Off / Run Forward Switch

Lockable Mains
Disconnect / Isolator.

Dimensional Data

Model	Size	Height	Width	Depth	Weight kg	Fixings
IP66	1	232	161	179	3.1	4 x M4
	2	257	188	187	4.1	4 x M4
	3	310	211	252	7.6	4 x M4

Dimensions in mm.

Elta Fans Limited has a policy of continuous product development and improvement and therefore reserves the right to supply products which may differ from those illustrated and described in this publication. Confirmation of dimensions and data will be supplied on request.

FLANGED DAMPER

Accessories

- Prevents reverse flow of air when fan is not operating
- Fixed directly to fan case flange
- Hot dip galvanised steel
- Galvanised steel butterfly type blades
- Suitable for horizontal or vertical (upward airflow) mounting

Product Code	Fan Dia. A	B	C	D	E	G	H	J	Weight kg
019-0315-STD	315	375	180	210	2.0	8	10	355	7.5
019-0355-STD	350	425	185	235	3.0	8	10	395	8.0
019-0400-STD	400	475	220	270	3.0	8	12	450	9.0
019-0450-STD	450	530	220	280	3.0	8	12	500	12.0
019-0500-STD	500	585	220	315	3.0	12	12	560	18.0
019-0560-STD	560	645	220	375	3.0	12	12	620	21.0
019-0630-STD	630	715	250	420	3.0	12	12	690	25.0
019-0710-STD	710	795	250	740	3.0	16	12	770	29.0
019-0800-STD	800	885	300	525	3.0	16	12	860	34.0
019-0900-STD	900	1000	300	590	4.0	16	15	970	59.0
019-1000-STD	1000	1100	420	646	4.0	16	15	1070	85.5

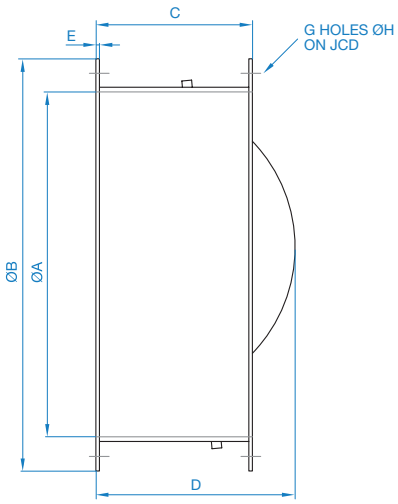

Dimensions are in mm.

Tel **01384 275800** Fax **01384 275810** Email **info@eltafans.co.uk** Website **eltafans.com**

FLANGED SILENCER

Accessories

Ideal for:

- bolting directly to fan flange
- all axial fans
- cross talk elimination
- flexible or spiral ducting

Overview

Elta Fans are able to provide 2 types of cylindrical silencers as standard; type DENP (without pod) and DEP (with pod), these are categorised as either compact silencers (ENP / EP) or standard silencers (ENP / EP / Melinex).

Construction

Both types are rigidly constructed in galvanised sheet steel, with a highly absorbent sound attenuating lining between the outer casing and the inner perforated steel lining. The end faces of the silencer has a series of threaded holes for direct mounting to the fixing flange / flexible collar. The EP (podded versions) will provide an improved level of attenuation. The inner acoustic pod is constructed from perforated steel sheet with a sound absorbent infill.

Melinex lined silencers must be used to prevent grease impregnation into the acoustic media for kitchen extract applications as prescribed in DW/172 HVAC Specification For Kitchen Ventilation Systems. For Melinex insertion losses, please contact Elta Fans. Silencers can be provided with differing lengths: 1D = 1 times diameter, 2D = 2 times diameter. The Velocity through podded silencer should not exceed 15m/s.

Silencer Attenuation

To determine the sound level of a fan fitted with a silencer, the dynamic insertion loss should be subtracted from the sound power level spectrum (dBW) of the fan. This should be done for the entire octave band mid-frequency spectrum. The fan dBW ratings and silencer attenuation apply equally to in duct applications, with a silencer connected between the fan and the duct system.

Dynamic Insertion Loss

The silencer attenuation is defined as the “dynamic insertion loss”. The values quoted in the tables represent the difference between the sound power level of a fan and silencer combination (dBW) and that of the fan alone (dBW). The dynamic insertion losses shown are the attenuations recorded under ideal working conditions. The achieved attenuation will vary according to the air velocity and flow pattern in the airways. Noise regeneration can occur at higher velocities, especially in EP silencers.

Square / Rectangular Silencers

In highly noise sensitive areas, where the circular silencers cannot achieve the necessary attenuation levels, Elta Fans can design and build optional splitter silencers for greater effect.

Elta Fans Limited has a policy of continuous product development and improvement and therefore reserves the right to supply products which may differ from those illustrated and described in this publication. Confirmation of dimensions and data will be supplied on request.

FLANGED SILENCER

Dynamic Insertion Loss & Pressure Graphs

Dynamic Insertion Loss

Fan Size	Silencer Length	Silencer Type	Insertion Loss @ Octave Band (Hz)							
			63	125	250	500	1k	2k	4k	8k
0315-0560	1D	ENP	-2	-5	-6	-9	-13	-11	-6	-6
		EP	-4	-6	-8	-11	-18	-19	-17	-14
	2D	ENP	-4	-8	-12	-17	-23	-17	-12	-10
		EP	-7	-10	-12	-21	-26	-26	-24	-22
0630-0800	1D	ENP	-3	-4	-9	-15	-15	-8	-7	-6
		EP	-4	-6	-8	-17	-23	-20	-18	-10
	2D	ENP	-6	-8	-13	-22	-22	-13	-12	-9
		EP	-8	-11	-16	-27	-32	-31	-29	-19
900-1000	1D	ENP	-3	-4	-9	-14	-13	-7	-7	-6
		EP	-4	-6	-11	-20	-18	-15	-13	-11
	2D	ENP	-6	-8	-13	-21	-18	-12	-11	-9
		EP	-8	-11	-18	-26	-27	-26	-22	-16

Podded Silencers Pressure Graphs

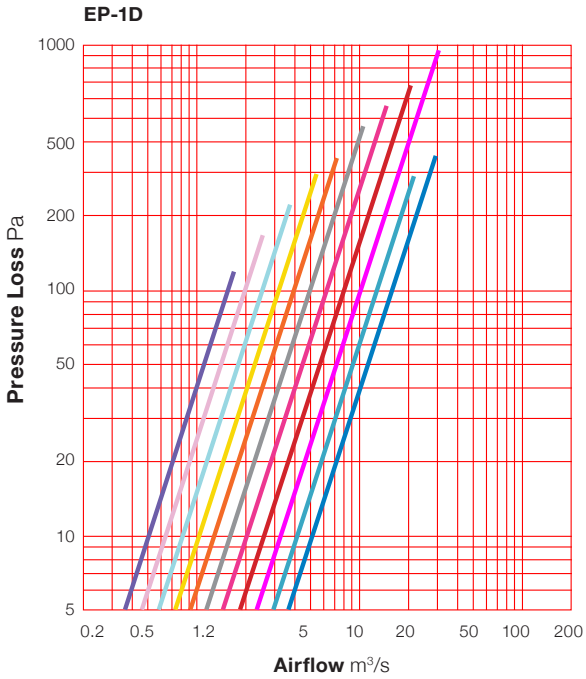

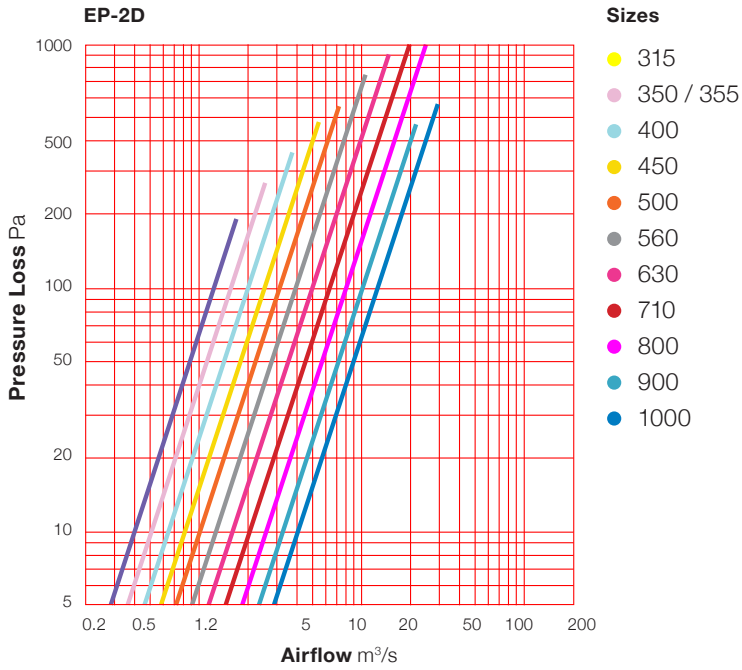

For Ø250 podded pressure losses, please contact Elta Fans.

Tel **01384 275800** Fax **01384 275810** Email **info@eltafans.co.uk** Website **eltafans.com**

FLANGED SILENCER

Dimensional Data

Silencer 1DEP Podded

Product Code	Fan Dia	A	B	C	D	E	Weight kg
068-0315-1DEP	315	315	416	8	M8	355	11
068-0350-1DEP	350	350	452	8	M8	395	13
068-0400-1DEP	400	400	503	8	M10	450	16
068-0450-1DEP	450	450	604	8	M10	500	18
068-0500-1DEP	500	500	657	12	M10	560	22
068-0560-1DEP	560	560	714	12	M10	620	26
068-0630-1DEP	630	630	784	12	M10	690	31
068-0710-1DEP	710	710	864	16	M10	770	39
068-0800-1DEP	800	800	954	16	M10	860	49
068-0900-1DEP	900	900	1103	16	M12	970	67
068-1000-1DEP	1000	1000	1203	16	M12	1070	82

Silencer 1DENP Unpodded

Product Code	Fan Dia	A	B	C	D	E	Weight kg
068-0315-1DENP	315	315	416	8	M8	355	9
068-0350-1DENP	350	350	452	8	M8	395	11
068-0400-1DENP	400	400	503	8	M10	450	13
068-0450-1DENP	450	450	604	8	M10	500	15
068-0500-1DENP	500	500	657	12	M10	560	18
068-0560-1DENP	560	560	714	12	M10	620	22
068-0630-1DENP	630	630	784	12	M10	690	26
068-0710-1DENP	710	710	864	16	M10	770	32
068-0800-1DENP	800	800	954	16	M10	860	40
068-0900-1DENP	900	900	1103	16	M12	970	55
068-1000-1DENP	1000	1000	1203	16	M12	1070	66

Silencer 2DEP Podded

Product Code	Fan Dia	A	B	C	D	E	Weight kg
068-0315-2DEP	315	630	416	8	M8	355	17
068-0350-2DEP	350	700	452	8	M8	395	21
068-0400-2DEP	400	800	503	8	M10	450	26
068-0450-2DEP	450	900	604	8	M10	500	31
068-0500-2DEP	500	1000	657	12	M10	560	37
068-0560-2DEP	560	1120	714	12	M10	620	46
068-0630-2DEP	630	1260	784	12	M10	690	57
068-0710-2DEP	710	1420	864	16	M10	770	71
068-0800-2DEP	800	1600	954	16	M10	860	90
068-0900-2DEP	900	1800	1103	16	M12	970	123
068-1000-2DEP	1000	2000	1203	16	M12	1070	151

Silencer 2DENP Unpodded

Product Code	Fan Dia	A	B	C	D	E	Weight kg
068-0315-2DENP	315	630	416	8	M8	355	15
068-0350-2DENP	350	700	452	8	M8	395	18
068-0400-2DENP	400	800	503	8	M10	450	22
068-0450-2DENP	450	900	604	8	M10	500	27
068-0500-2DENP	500	1000	657	12	M10	560	32
068-0560-2DENP	560	1120	714	12	M10	620	39
068-0630-2DENP	630	1260	784	12	M10	690	48
068-0710-2DENP	710	1420	864	16	M10	770	59
068-0800-2DENP	800	1600	954	16	M10	860	74
068-0900-2DENP	900	1800	1103	16	M12	970	102
068-1000-2DENP	1000	2000	1203	16	M12	1070	124

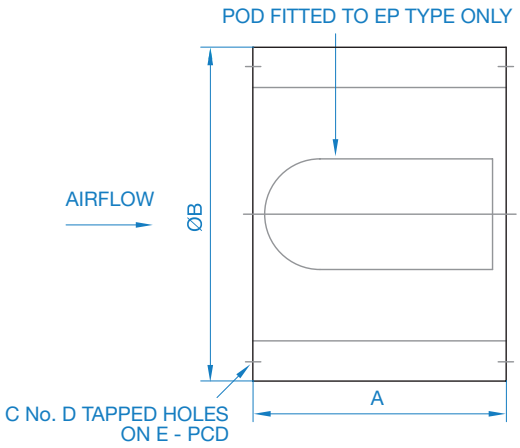

Dimensions are in mm.

Elta Fans Limited has a policy of continuous product development and improvement and therefore reserves the right to supply products which may differ from those illustrated and described in this publication.
Confirmation of dimensions and data will be supplied on request.

IMPELLER SIDE GUARD

Accessories

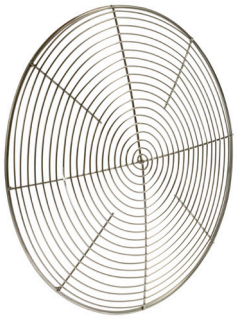

- Powder coated polyester epoxy paint finish in RAL 7040 (Window Grey)
- Fix with clips & screw provided

Product Code	Fan Dia.	A	B	Weight kg
078C-0315-C	315	335	21	1.1
078C-0355-C	350	370	23	1.4
078C-0400-C	400	420	26	1.6
078C-0450-C	450	470	29	1.8
078C-0500-C	500	520	32	2.2
078C-0560-C	560	585	32	2.5
078C-0630-C	630	655	40	2.6
078C-0710-C	710	730	50	3.2
078C-0800-C	800	820	50	3.5
078C-0900-C	900	920	60	4.0
078C-1000-C	1000	1020	60	4.5

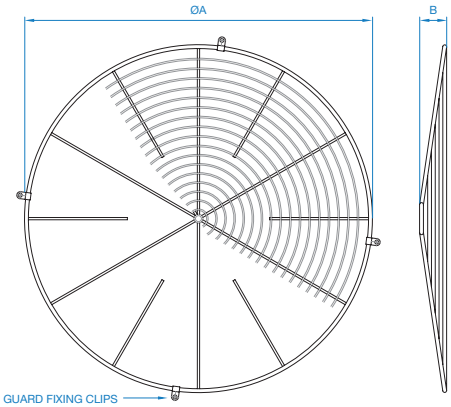

Dimensions are in mm.

Tel **01384 275800** Fax **01384 275810** Email **info@eltafans.co.uk** Website **eltafans.com**

MATCHING FLANGES

Accessories

- Fits directly to fan case flange
- Provides easy connection to flexible connector or ducting
- Hot dip galvanised steel

Product Code	Fan Dia. A	B	C	D	E	F	G	Weight kg
061B-0315	315	375	30	1.5	8	10	355	0.7
061B-0355	355	425	40	1.5	8	10	395	0.9
061B-0400	400	475	40	1.5	8	12	450	1.2
061B-0450	450	530	40	1.5	8	12	500	2.2
061B-0500	500	585	45	2.0	12	12	560	2.6
061B-0560	560	645	45	2.0	12	12	620	3.0
061B-0630	630	715	45	2.0	12	12	690	3.5
061B-0710	710	795	45	2.0	16	12	770	3.7
061B-0800	800	885	50	2.5	16	12	860	5.0
061B-0900	900	1000	50	2.5	16	15	970	5.5
061B-1000	1000	1110	50	2.5	16	15	1070	6.5

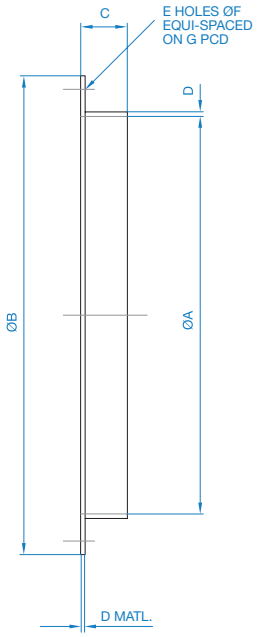

Dimensions are in mm.

Elta Fans Limited has a policy of continuous product development and improvement and therefore reserves the right to supply products which may differ from those illustrated and described in this publication.
Confirmation of dimensions and data will be supplied on request.

MOUNTING FEET

Accessories

- For free standing mounting of ducted fans
- Fixes directly to fan case flange
- Hot dip galvanised steel

Product Code	Fan Dia.	A	B	C	D	E	F	G	H	Weight kg
060B-0315	315	200	265	315	180	40	23	3	9	1.0
060B-0355	355	230	300	350	210	40	23	3	9	1.3
060B-0400	400	250	350	400	230	50	27.5	4	9	1.5
060B-0450	450	280	400	450	255	50	27.5	4	11	2.0
060B-0500	500	315	450	500	290	50	27.5	4	11	2.5
060B-0560	560	355	510	560	330	60	32	5	11	4.0
060B-0630	630	400	580	630	375	60	32	5	11	5.0
060B-0710	710	450	660	710	425	60	32	5	11	5.5
060B-0800	800	500	750	800	475	60	32	5	11	6.0
060B-0900	900	560	850	900	530	70	36	6	11	9.0
060B-1000	1000	630	950	1000	595	70	36	6	13	12.0

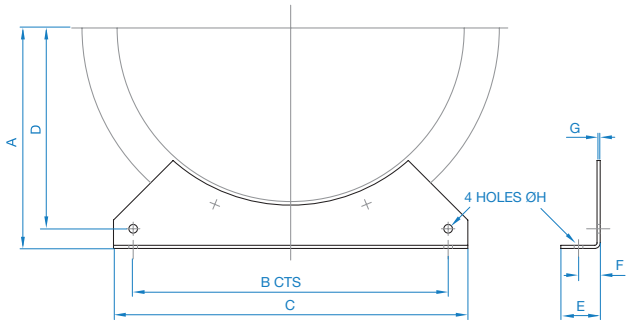

Dimensions are in mm.

Tel **01384 275800** Fax **01384 275810** Email **info@eltafans.co.uk** Website **eltafans.com**

STANDARD AMBIENT FLEXIBLE CONNECTOR

Accessories

- Fit to matching flanges to provide flexible connection
- PVC coating polyester
- Supplied with plated steel band fixings
- Alternative material available to order
- Suitable for temperatures between -30°C and +70°C

Product Code	Fan Dia. A	B	Weight kg
063-0315-MAN150	315	150	0.6
063-0350-MAN150	350	150	0.7
063-0400-MAN150	400	150	0.9
063-0450-MAN150	450	150	1.1
063-0500-MAN150	500	150	1.2
063-0560-MAN150	560	150	1.3
063-0630-MAN200	630	200	1.4
063-0710-MAN200	710	200	2.0
063-0800-MAN200	800	200	2.3
063-0900-MAN200	900	200	2.7
063-1000-MAN250	1000	250	3.0

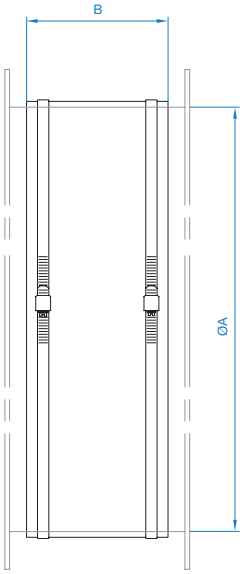

Dimensions are in mm.

Elta Fans Limited has a policy of continuous product development and improvement and therefore reserves the right to supply products which may differ from those illustrated and described in this publication.
Confirmation of dimensions and data will be supplied on request.

TRANSFORMER CONTROLLER

Accessories

- IP40 enclosure
- Five speed stepped control
- Illuminated on/off switch (single phase units only)
- Fitted Motor Protection type D MCB (single phase units only)
- Suitable for operating temperatures up to +40°C
- Ideal for environments where noise is a primary consideration as these controls do not create magnetic hum associated with some step-less forms of speed control

Features & Benefits

A range of transformer voltage controllers used to provide five speed step control of single phase or three phase motors where the peak current of the motor does not exceed the rating of the controller. Speed control is via selector switch. Single phase units are complete with illuminated on/off switch.

Single Phase 220V to 240V / 50Hz

Product Code	Max Peak Current Amps	Weight kg	IP Rating
149-TC18	8	6	IP40
149-TC116	16	13	IP40

Three Phase 380V to 415V / 50Hz

Product Code	Max Peak Current Amps	Weight kg	IP Rating
149-TC33	3	12	IP40
149-TC310	10	25	IP40

REVOLUTION SLC

Notes

Elta Fans Limited has a policy of continuous product development and improvement and therefore reserves the right to supply products which may differ from those illustrated and described in this publication. Confirmation of dimensions and data will be supplied on request.

REVOLUTION SLC

Notes

Tel **01384 275800** Fax **01384 275810** Email **info@eltafans.co.uk** Website **eltafans.com**

REVOLUTION SLC

Notes

Elta Fans Limited has a policy of continuous product development and improvement and therefore reserves the right to supply products which may differ from those illustrated and described in this publication. Confirmation of dimensions and data will be supplied on request.

Building Services

Tel **+44 (0) 1384 275800**
Fax **+44 (0) 1384 275810**
Email **info@eltafans.co.uk**

46 Third Avenue, Pensnett Trading Estate, Kingswinford,
West Midlands, DY6 7US United Kingdom

Applied Technology & Building Services Export

Tel **+44 (0) 1489 566500**
Fax **+44 (0) 1489 566555**
Email **at@eltafans.co.uk** / **export@eltafans.co.uk**

17 Barnes Wallis Road, Segensworth East Industrial Estate,
Fareham, Hampshire, PO15 5ST United Kingdom

eltafans.com

SLC-02-2020 Issue D

BS EN ISO 9001:2015 FM 556465

A member of HEVAC ASSOCIATION

CIBSE PATRONS

A MEMBER OF ELTA GROUP