GRANT UK

Meet the Aerona³ R32 Range.

Our greenest, most efficient heat pumps yet.

Up to 7 year guarantee*

QUIET MARK

HPID13R2 & HPID17R32

A+++

R32 REFRIGERANT

R32 refrigerant with GWP of 675 - 70% lower than R410A (GWP of 2088)

Improved efficiency & performance

Excellent SCOP's

Quiet in operation

6 - 17kW output

*Subject to full Terms & Conditions and status.

RIBA · CPD PROVIDERS NETWORK

www.grantuk.com

Technical Specifications

		HPID6R32	HPID10R32	HPID13R32	HPID17R32
ErP Rating*	Heating	A+++	A+++	A+++	A+++
Height (mm)		675	882	1418	1418
Width (mm)		898	874	1024	1024
Depth (mm)		379.4	405	403	403
Weight (kg)	Empty	51	70	99	118
	Full	52.8	71.8	101	120
Heating Capacity (kW) (BS EN 14511 - air 7°C/ Water 35°C)		6.92	11.1	13.6	18.0
Power input (kW) (BS EN 14511 - air 7°C/ Water 35°C)		1.41	2.10	2.59	3.76
COP (BS EN 14511 - air 7°C/ Water 35°C)		4.91	5.28	5.25	4.79
SCOP average climate conditions (BS EN 14511 - air 7°C/ Water 35°)		4.61	5.20	5.40	4.54
Refrigerant (R32) (kg)		0.80	1.55	2.20	2.80
Power supply		~230V 1ph 50Hz			
Water connections (BSPF)		¾"	1"	1 ¼"	1 ¼"
Min/ Max operating temperatures Air (°C)		-20/43	-20/43	-20/43	-20/43
Sound power level dB(A) (BS EN ISO 3743-1:2010)		65.2	64	60.8	61.6
Sound pressure level at 1m - external (dB(A)) (Q=1)		54.2	53	49.8	50.6
Electrical Installation Requirements					
Max running current (A)		11.2	17.5	23.0	25.3
MCB	Rating (A)	16	20	32	32
	Type	C	C	C	C

* Low temperature: 35°C flow (heating). From September 2019

HPID6R32

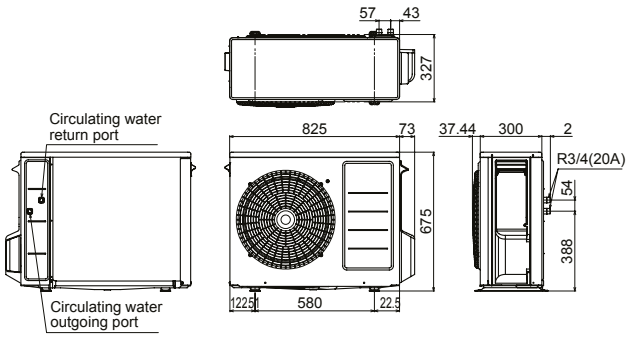

HPID10R32

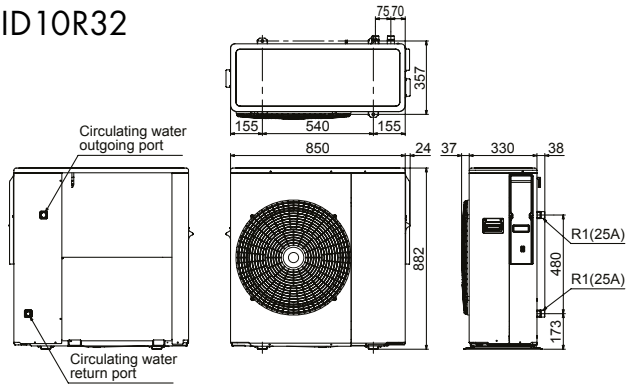
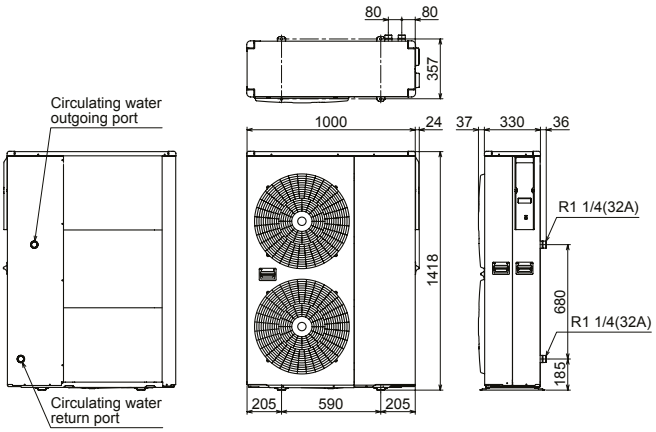
HPID13R32 & HPID17R32