# Harper tree consulting

www.harper-trees.co.uk

28 Rodbourne Close, Lymington, Hampshire,SO41 0LW.
Tel: 077982 911104 Email: jonharper@harper-trees.co.uk

Arboricultural Report
BS5837:2021 (Trees in Relation to Design, Demolition & Construction)

**Client:** Maverick Properties
**Site:** Sulby Croft, Heathlands Road, Wokingham, RG40 3AR.
**Date of survey:** 22nd January 2024
**Date of report:** 09th October 2024
**Surveyor:** Jon Harper cert.Arb (RFS)
**Report reference:** 2024005 v2.0

## CONTENTS

Page

1. INTRODUCTION ..... 3

1.1. BS5839:2012 ..... 3

1.2. Terms and Definitions ..... 3

1.2.1. Access Facilitation Pruning ..... 3

1.2.2. Arboricultural Method Statement (AMS) ..... 3

1.2.3. Arboriculturist ..... 3

1.2.4. Competent Person ..... 3

1.2.5. Construction ..... 3

1.2.6. Construction Exclusion Zone (CEZ) ..... 3

1.2.7. Root Protection Area (RPA) ..... 3

1.2.8. Services ..... 3

1.2.9. Stem ..... 3

1.2.10. Structure ..... 4

1.2.11. Tree Protection Plan ..... 4

1.2.12. Veteran Tree ..... 4

1.3. The Proposal/Relevant History ..... 4

1.4. Brief and Purpose ..... 4

1.5. Scope ..... 4

1.6. Documents Supplied/Used ..... 5

1.7. Executive Summary ..... 5

2. TREE SURVEY ..... 6

2.1. Survey Summary ..... 6

2.2. Survey Method ..... 6

2.3. Tree Details ..... 6

2.4. Legal Protection Status of Trees. ..... 7

3. ARBORICULTURAL IMPACT ASSESSMENT ..... 8

3.1. Summary of Impact Assessment ..... 8

3.2. Removal of trees ..... 8

3.3. Tree Works....8

3.4. Incursions into RPAs....8

3.5. Light and Proximity Issues....9

3.6. Mitigation....9

3.7. Conclusion....9

4. ARBORICULTURAL METHOD STATEMENT....10

4.1. Introduction....10

4.2. Pre-commencement Meeting....10

4.3. Sequencing and Supervision....10

4.4. Site Precautions....11

4.5. Carrying out tree works....11

4.6. Protective Fencing and Ground Protection....11

4.7. Site Access....12

4.8. Demolition Work....12

4.9. Underground Services....12

4.10. Foundations and Construction....13

4.11. Fencing and Landscaping....14

4.12. Amendments....14

TREE SURVEY SCHEDULE....15

TREE CONSTRAINTS PLAN....16

TREE REMOVAL PLAN....17

TREE PROTECTION PLAN....18

# 1. INTRODUCTION

## 1.1. BS5839:2012

The current British Standard for trees in relation to design, demolition, and construction is BS5837:2012. This became current in May 2012, and supersedes the old 2005 standard.

## 1.2. Terms and Definitions

### 1.2.1. Access Facilitation Pruning

One-off tree pruning operation, the nature and effects of which are without significant adverse impact on tree physiology or amenity value, which is directly necessary to provide access for operations on site.

### 1.2.2. Arboricultural Method Statement (AMS)

Methodology for the implementation of any aspect of development that is within the root protection area, or has the potential to result in the loss of, or damage to a tree to be retained.

### 1.2.3. Arboriculturist

Person who has through relevant education training and experience, gained expertise in the field of trees in relation to design, demolition, and construction.

### 1.2.4. Competent Person

Person who has training and experience relevant to the matter being addressed and an understanding of the requirements of the particular task which is being approached.

### 1.2.5. Construction

Site-based operations with the potential to affect existing trees.

### 1.2.6. Construction Exclusion Zone (CEZ)

Area based on the root protection area (2.7) from which access is prohibited for the duration of the project.

### 1.2.7. Root Protection Area (RPA)

Layout design tool indicating the minimum area around a tree deemed to contain sufficient roots and rooting volume to maintain a tree's viability, and where the protection of roots and soil structure is treated as a priority.

### 1.2.8. Services

Any above or below-ground structure or apparatus required for utility provision.

### 1.2.9. Stem

Principal above-ground structural component(s) of a tree that supports its branches.

### 1.2.10. Structure

Manufactured object, such as a building, carriageway, path, wall, service run, and built or excavated earthwork.

### 1.2.11. Tree Protection Plan

Scale drawing, informed by descriptive text where necessary, based on the finalised proposals, showing trees for retention, and illustrating the tree and landscape protection measures.

### 1.2.12. Veteran Tree

Tree that, by recognised criteria, shows features of biological, cultural or aesthetic value that are characteristic of, but not exclusive to, individuals surviving beyond the typical age range for the species concerned.

## 1.3. The Proposal/Relevant History

The proposal, in this instance, is to extend the existing dwelling as shown using the purple colour on the tree constraints plan (2024005/TCP002) in this report.

## 1.4. Brief and Purpose

This report has been commissioned by Maverick Properties to;

- Survey the trees on site in accordance with BS5837:2012.
- Detail the arboricultural implications of the proposed project.
- Present an effective tree protection strategy for the duration of the development.
- Provide the necessary arboricultural information to accompany a planning application to Wokingham Borough Council.

## 1.5. Scope

The trees have been surveyed in accordance with the BS. Trees on and immediately adjacent to the site with a stem diameter over 75mm have been included.

A full hazard assessment of the trees (including the assessment of decay or defects and their implications), has not been undertaken as this is considered beyond the scope of this report. Any obvious hazards and defects have, however, been identified in the Tree Survey Schedule and appropriate works recommended for action.

## 1.6. Documents Supplied/Used

| Document | Supplied by | Format/Reference |
|---|---|---|
| GEO23-098_T | Geopoint Ltd | DWG |
| 9230-111 Proposed ground floor plan | The Keen Partnership | PDF |

## 1.7. Executive Summary

The application site is a relatively large residential site with a detached dwelling and vehicular access near to the front on Heathlands Road. Further back is a lawned garden area and a tennis court. There are mature trees mainly to the northern boundary with some along the roadside boundary.
At the time of writing this report, there is a  tree preservation order in force on the site (1960/2024) but it is not in a conservation area.
The current proposal involves extending the existing dwelling to the south, for a garage, to the north and west, for a gym area and to the south and west to expand the main living area.
There are several root protection area incursions, but I believe that the proposal is achievable without causing harm to the trees by using specially engineered solutions that are set out in section 4.10 of this report.

# 2. TREE SURVEY

## 2.1. Survey Summary

| | |
|---|---|
| Total number of trees | 26 + H21, H22, H23, G26 & G27 |
| Category A | 0 |
| Category B | 20 + G26 & G27 |
| Category C | 5 + H21, H22 & H23 |
| Category U | 1 |

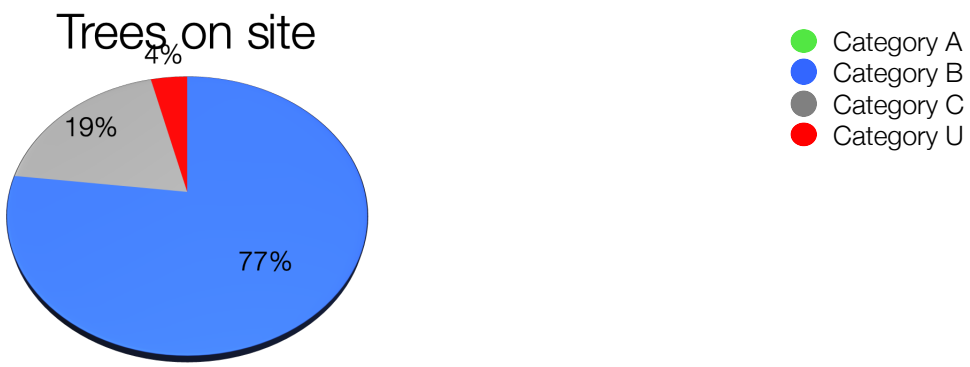


## 2.2. Survey Method

The trees were surveyed on January 22nd 2024.
Locations of the trees were plotted using the topographical survey provided by Geopoint Ltd.
All trees were inspected from ground level only using widely accepted Visual Tree Assessment techniques, and no trees were climbed during the survey.
No trees were internally investigated. Should a more detailed inspection be required this will be pointed out in the recommendations on the survey schedule.

## 2.3. Tree Details

With regard to their desirability for retention, the trees surveyed have been graded with their trunks colour coded on the tree constraints plan, and tree protection plan using the criteria contained in BS5837:2012. A summary of this grading is as follows.

A= Light Green. Trees of high quality and value, in such a condition as to be able to make a substantial contribution (a minimum of 40 years is suggested in the British Standard). Usually worthy of consideration as a material constraint to any proposed development.

B= Mid Blue. Trees of moderate quality and value in such a condition as to make a significant contribution (a minimum period of 20 years is suggested in the British Standard). Usually worthy of consideration as a material constraint to any proposed development.

C= Grey. Trees of low quality and value, in adequate condition condition to remain until new planting could be established (a minimum of 10 years is recommended in the British Standard), or trees with a stem diameter below 150mm. Not usually worthy of consideration as a material constraint to any proposed development.

U= Red. Trees in such a condition that they cannot be realistically be retained as living specimens in the context of the current land use for longer than 10 years.

In our survey schedule, the RPA for each tree is indicated as the radius of a circle as well as in $M^2$. This is also plotted on the tree constraints plan and tree protection plan denoted by a heavy black line which merges the individual RPAs together where there is more than one tree.

Section 4.6 of BS5837:2012 provides for the shape of the RPA to be modified from the starting point of a circle to account for site features such as hard surface treatments where root growth may be restricted, as long as the total remains the same. In this case, no RPAs were modified. **Please Note:** The facility for offsetting an RPA by 20% for open grown trees was withdrawn on May 01st 2012.

## 2.4. Legal Protection Status of Trees.

| Type of Protection | Details/Reference |
|---|---|
| Conservation Area | No |
| Tree Preservation Order | Yes 1960/2024 |
| Planning conditions requiring tree retention | No |

# 3. ARBORICULTURAL IMPACT ASSESSMENT

## 3.1. Summary of Impact Assessment

| | |
|---|---|
| Total number of trees surveyed | 26 + H21, H22, H23, G26 & G27 |
| Number of trees to be removed | 2 |
| Number of trees to be pruned | 0 |
| Number of trees with RPA incursions | 5 |

## 3.2. Removal of trees

| Category A Trees (High Grade) | Category B Trees (Moderate Grade) | Category C Trees (Low Grade) | Category U Trees (Unretainable) |
|---|---|---|---|
| N/A | N/A | T30 | T14 |

The trees in the table above will be felled to the ground and the stumps will be ground out to prevent damage to the roots of retained trees nearby. The reason for removal may be for either of the reasons below.

A. There may be a direct conflict with the proposed development.
B. The trees may not be in a condition that makes them desirable for retention.

| Trees to be removed | Impact on the character of the local area. | Mitigation (if any) |
|---|---|---|
| T14 | None: Although a fairly large tree, T14 is dead or in the later stages of decline. | None required |
| T30 | None: This is a small, category C tree, which cannot be seen from outside of the site. | Two new trees will be planted near to the southern boundary of the site. |

## 3.3. Tree Works

Apart form the two trees to be removed as stated in section 3.2 of this report, no tree work is required for the current proposal to be completed.

## 3.4. Incursions into RPAs

In many instances, a low degree of root disturbance can be deemed to be acceptable
Where incursions can be fully invasive, or low level invasion can sometimes be achieved by the use of specialist methods to limit the degree of disturbance. The table details the incursions and how they are to be dealt with.

| Incursions into RPAs of retained trees | | |
|---|---|---|
| Type of incursion | Tree number | Precautions to be taken |
| Foundations for extensions | T1, T5, T6, T7 & T8 | A specially engineered foundation with a suspended floor beam will be used. See section 4.10 of this report. |

## 3.5. Light and Proximity Issues

There are no arboricultural light or proximity issues associated with the current proposal.

## 3.6. Mitigation

To mitigate the loss of T30 two new trees will be planted near to the southern boundary of the site. One Liquidambar styracaflua slender silhouette and one Carpinus betulus Fastigiata. Both 3m in height (the specifications of these two trees can be agreed and altered if necessary if required by the LPA tree officer.

## 3.7. Conclusion

Assuming full compliance with the AMS in this report, the net arboricultural impact is acceptable.

# 4. ARBORICULTURAL METHOD STATEMENT

## 4.1. Introduction

During the development process, the tree protection measures set out in this method statement must be adhered to in order to safeguard the retained trees. The principles below are specifically designed to offer a significant degree of protection to both the root systems and aerial parts of the trees for the duration of the works.

A copy of this method statement must be made available on site at all times until the cessation of any demolition, construction, and landscaping work, and the site personnel will be made familiar with the key implications of this AMS.

It should be remembered that powers were granted to Local Planning Authorities in 2005, which allow them to serve Temporary Stop Notices if agreed protection measures are strayed away from before work is completed. This can be extremely costly and very time consuming.

## 4.2. Pre-commencement Meeting

If the Local Planning Authority deem it necessary, a pre-commencement meeting will be held, attended by the project Arboricultural Consultant, the Site Manager, and the LPA Tree Officer. During this meeting potential problems and protection sequencing can be discussed and it is expected that all aspects of the tree protection measures set out in this AMS will be understood and agreed. Following this meeting, all parties involved will receive an email from the Arboricultural Consultant containing a record of what was discussed and agreed.

## 4.3. Sequencing and Supervision

Sequencing of events and effective arboricultural supervision are important elements of the tree protection process.

There is no necessity for any direct arboricultural supervision in this instance.

**Key Stages:**

- AMS issued to Site Manager/Building Company
- AMS to be read by all site personnel to ensure a full understanding of implications. Any raised issues are to be addressed to the project Arboricultural Consultant
- Recommended and agreed tree works to be carried out
- Tree protective fencing and ground protection installed
- Existing buildings to be demolished where appropriate
- Construction work carried out
- Tree protective fencing and ground protection removed
- Landscaping (if any) carried out

**Summary of Arboricultural Monitoring and Supervision**

| Activity | Level of monitoring/supervision required |
|---|---|
| Erection of tree protective fencing | Signing off of the approved tree protection measures by the project arboricultural consultant prior to any development work commencing |
| Installation of ground protection measures | |

It is also imperative that telephone contact between the site manager and the Arboricultural Consultant is maintained with regard to any tree protection measure issues.

## 4.4. Site Precautions

The following points will be observed at all times:

- No fires will be lit within 15m of any retained tree on or around the site
- No access will be permitted inside the tree protection fences
- No materials, equipment, or waste will be stored inside the tree protection fencing at all
- Notice boards, telephone cables, or other services will not, under any circumstances, be attached to retained trees
- Material which contaminate soil, such as concrete, diesel oil, vehicle washings and even builders sand, will not be allowed to enter the RPA of any retained tree

## 4.5. Carrying out tree works

All tree works, where required, will be carried out in accordance with BS3998:2010 (Recommendations for Tree Works), and to the current arboricultural best practice. Tree works will be carried out by a suitably qualified and insured contractor. The contractor will be solely responsible for carrying out their own site risk assessment prior to the commencement of work.
If at any time during the development a need for additional tree works is highlighted to facilitate the proposed works or access for machinery/plant, the Arboricultural Consultant will be contacted to advise on appropriate works and liaise with the LPA as necessary.

## 4.6. Protective Fencing and Ground Protection

The required tree protective fencing should be installed to fence off the construction exclusion zone(s), or CEZ, shown on the tree protection plan (Figure 2). This must only be altered or moved as agreed in writing by the Local Planning Authority following advice from a competent Arboricultural Consultant.

The Tree Protective fencing will be 2.4m Heras fencing as specified in the BS. The fencing will be supported by a scaffold framework with supporting struts firmed into the ground on the side of the trees. The purpose of the supports is to prevent the fencing being moved during the development. Clear signs will be attached to the fencing (e.g. Tree Protective Fencing – Keep Out).

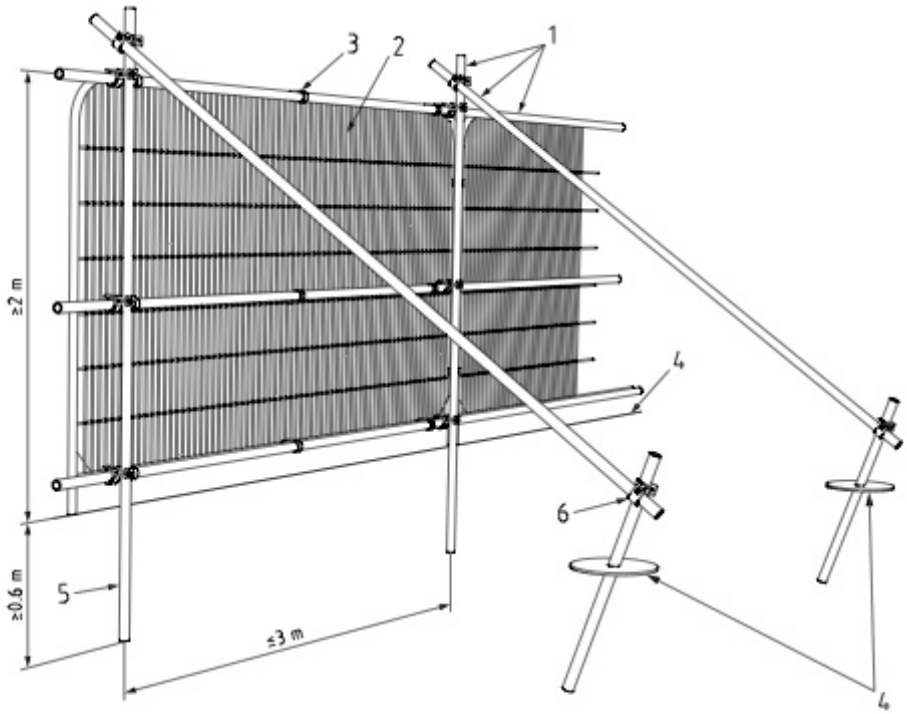


**Key**

1 Standard scaffold poles
2 Heavy gauge 2 m tall galvanized tube and welded mesh infill panels
3 Panels secured to uprights and cross-members with wire ties
4 Ground level
5 Uprights driven into the ground until secure (minimum depth 0.6 m)
6 Standard scaffold clamps

In this case, ground protection would be in the form of 18mm OSB or ply wood on top of a compressible layer of wood chip or sharp sand (not builders sand due to its high salt content). This compressible layer will be 100mm deep and this depth will be maintained throughout the construction process. All of the ground protection will be on top pf a geotextile membrane to prevent the compressible layer from leaching into the ground. Scaffolding can be erected on top of this arrangement where needed.

## 4.7. Site Access

Site access will only be available via the existing northern most site entrance on Heathlands Road for construction purposes

## 4.8. Demolition Work

Once the approved tree protection measures are in place, demolition will be carried out in the normal way. All waste from demolition will be stored away from the RPAs of all retained trees until it can be removed for disposal.

## 4.9. Underground Services

New underground services will be routed into the footprint of the new dwellings avoiding the RPAs of all retained trees.
There are two toilets that are to be sited in the pool building within the RPA of T6. The fresh water supply to these will be within the building and the foul water will be via macerators and a 38-40mm waste to reduce any disturbance.

Run off water will be routed into soak aways, the position of which will be agreed with the LPA before work commences.

## 4.10.Foundations and Construction

Where the proposed extensions cause RPA incursions, a traditional strip type foundation will be installed outside of the RPAs. Then a reinforced concrete floor beam will be suspended above the natural ground level and supported on screw piles. Root barriers will be installed as shown in the diagram so that there is no risk of root damage due to any potential future growth.

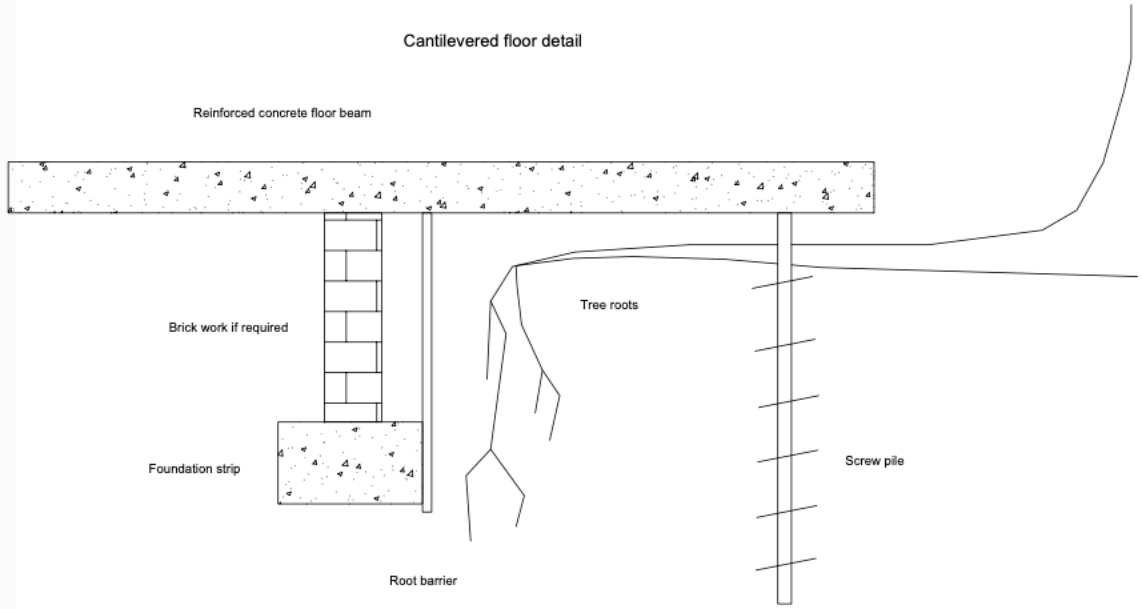


Any excavation within the RPAs will be carried out using nothing more than hand held breakers and any spoil will be stored away from the RPAs. Any roots that may be encountered will be treated as suggested in section 7.2 of BS5837:2012. See the excerpt on the next page for details.

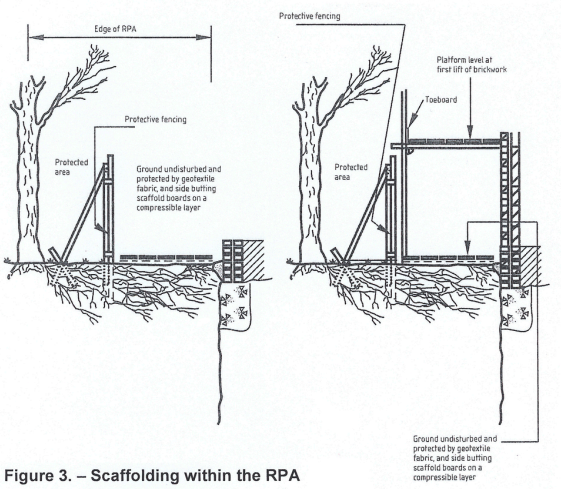


**Figure 3. – Scaffolding within the RPA**

Roots, whilst exposed, should immediately be wrapped or covered to prevent desiccation and to pro tect them from rapid temperature changes. Any wrapping should be removed prior to backfilling, which should take place as soon as possible.

Roots smaller than 25 mm diameter may be pruned back, making a clean cut with a suitable sharp tool (e.g. bypass secateurs or handsaw), except where they occur in clumps. Roots occurring in clumps or of 25 mm diameter and over should be severed only following consultation with an arboriculturist, as such roots might be essential to the tree's health and stability. In the case of roots larger than 25mm in diameter, no further action will be taken until this has been referred to the project arboriculturist.

Prior to backfilling, retained roots should be surrounded with topsoil or uncompacted sharp sand (build ers' sand should not be used because of its high salt content, which is toxic to tree roots), or other loose inert granular fill, before soil or other suitable material is replaced. This material should be free of contaminants and other foreign objects potentially injurious to tree roots.

It is imperative that the project arboriculturist is consulted as soon as anything is unclear on site.

## 4.11. Fencing and Landscaping

During the landscaping phase of the development (if any landscaping takes place), the following precautions will be observed:

- No compaction of soil within the RPAs (or where new tree planting is to be carried out).
- No changes in ground levels.
- Unwanted vegetation to be removed manually or using contact herbicides that will not damage existing tree roots.
- No underground irrigation or drainage pipes to be installed
- If soil has been compacted in areas where planting is proposed, measures to improve soil structure (e.g. decompaction) may be necessary to facilitate successful plant establishment.

If any fence posts are installed within the RPAs of retained trees, excavation will be carried under direct arboricultural supervision using hand tools. Posts will be re-positioned if roots in excess of 25mm in diameter are encountered. Post holes will be lined with heavy gauge polythene where concrete is used to safeguard the rooting environment of the trees from the potentially toxic effects of leaching concrete.

## 4.12. Amendments

Issues may arise on development sites that require amendments to the previously agreed tree protection details. Any amendments to this AMS will be approved in writing by the LPA prior to being implemented. Copies of paperwork relating to any amendments will be communicated by the Arboricultural Consultant to the Client and LPA.

**This concludes the advice given in this report**
**Compiled and presented by**
**Jon Harper cert.Arb (RFS)**

# TREE SURVEY SCHEDULE

Please note that the recommendations on the tree survey schedule have not been considered in relation to the design of any potential proposed development, but are derived from observations made on site.

# Tree Survey Schedule

**Date:** January 22nd 2024
**Site:** Sulby Croft
**Surveyor:** Jon Harper cert.Arb (RFS)

= Category A trees
= Category B trees
= Category C trees
= Category U trees

Harper tree consulting
www.harper-trees.co.uk

| Type (Tag) | Name | Age | Category | Diameter (Stems) | Height (L/Hgt) | North | East | South | West | Condition | Life Exp | Comments | Recommendations | RPR | RPA |
|---|---|---|---|---|---|---|---|---|---|---|---|---|---|---|---|
| T1 | Quercus robur (Common Oak) | M | B1 | 750(1) | 14(5) | 7 | 7 | 8 | 8 | Good | 40 | None at present. | None at present. | 9 | 254.5 |
| T2 | Camelia | M | C1 | 198(7) | 4(0.5) | 2 | 2 | 2 | 2 | Good | 10 | Multiple stems at ground level. | None at present. | 2.38 | 17.8 |
| T3 | Picea abies (Norway Spruce) | M | B1 | 250(1) | 11(1.5) | 2.5 | 2.5 | 2.5 | 2.5 | Good | 20 | None at present. | None at present. | 3 | 28.28 |
| T4 | Quercus robur (Common Oak) | M | B1 | 700(1) | 14(5) | 6 | 8 | 8 | 9 | Good | 40 | None at present. | None at present. | 8.4 | 221.7 |
| T5 | Quercus robur (Common Oak) | M | B1 | 600(1) | 12(3) | 5 | 6 | 8 | 8 | Good | 40 | Major deadwood in | Remove major deadwood. | 7.2 | 162.88 |
| T6 | Quercus robur (Common Oak) | M | B1 | 550(1) | 10(4) | 5 | 6 | 6.5 | 7 | Good | 40 | Major deadwood in | Remove major deadwood. | 6.6 | 136.87 |
| T7 | Chamaecyparis lawsoniana (Lawson Cypress | M | B1 | 400(1) | 16(2) | 3 | 3 | 3 | 3 | Good | 20 | None at present. | None at present. | 4.8 | 72.39 |
| T8 | Acer pseudoplatanus (Sycamore) | M | B2 | 636(2) | 14(3) | 5 | 6 | 7 | 6.5 | Good | 20 | Stem divides at ground level. | None at present. | 7.63 | 182.92 |
| T9 | Chamaecyparis lawsoniana (Lawson Cypress | M | B1 | 350(1) | 16(2) | 3 | 3 | 3 | 3 | Good | 20 | Spindly. | None at present. | 4.2 | 55.42 |
| T10 | Taxus baccata (Yew) | EM | B2 | 170(1) | 5(1) | 2 | 3 | 4 | 3 | Good | 20 | Crown distorted due to group pressure. | None at present. | 2.04 | 13.08 |
| T11 | Quercus robur (Common Oak) | M | B1 | 550(1) | 10(4) | 4 | 5 | 7 | 6 | Fair | 40 | Crown distorted due to group pressure. | None at present. | 6.6 | 136.87 |
| T12 | Ilex aquifolium (Holly) | M | B3 | 280(1) | 7(1.5) | 3 | 3 | 3 | 3 | Good | 20 | None at present. | None at present. | 3.36 | 35.47 |
| T13 | Chamaecyparis lawsoniana (Lawson Cypress | M | B1 | 490(1) | 17(5) | 3 | 3 | 3 | 3 | Good | 20 | None at present. | None at present. | 5.88 | 108.63 |
| T14 | Quercus petraea (Sessile Oak) | M | U | 530(1) | 12(4) | 3 | 5 | 5 | 6 | Poor | <10 | Declining. Dieback in crown. Low bud/leaf density. Major deadwood in crown. | Remove tree and root. | 6.36 | 127.09 |
| T15 | Acer pseudoplatanus (Sycamore) | M | B2 | 420(1) | 17(4) | 4 | 5 | 7 | 6 | Good | 20 | Ivy on tree. Unable to inspect stem due to Ivy. | Sever Ivy. | 5.04 | 79.81 |
| T16 | Chamaecyparis lawsoniana (Lawson Cypress | M | B1 | 300(1) | 14(2) | 2.5 | 2.5 | 2.5 | 2.5 | Good | 20 | None at present. | None at present. | 3.6 | 40.72 |
| T17 | Quercus robur (Common Oak) | M | B1 | 750(1) | 19(4) | 8 | 8 | 8 | 8 | Good | 40 | Ivy on tree. Unable to inspect stem due to Ivy. | Sever Ivy. | 9 | 254.5 |
| T18 | Chamaecyparis lawsoniana (Lawson Cypress | M | B1 | 424(8) | 6(2) | 3 | 3.5 | 4.5 | 3.5 | Good | 20 | None at present. | None at present. | 5.09 | 81.4 |
| T19 | Acer pseudoplatanus (Sycamore) | M | C1 | 382(2) | 14(3) | 3 | 3 | 3 | 3 | Fair | 20 | Stem divides at ground level. | None at present. | 4.58 | 65.91 |
| T20 | Populus canescens (Grey Poplar) | M | B1 | 380(1) | 13(4) | 6 | 7 | 7 | 7 | Good | 20 | None at present. | None at present. | 4.56 | 65.33 |
| H21 | Chamaecyparis lawsoniana (Lawson Cypress | EM | C1 | 75(1) | 4(0) | 0.5 | 0.5 | 0.5 | 0.5 | Good | 20 | None at present. | None at present. | 0.9 | 2.55 |
| H22 | Chamaecyparis lawsoniana (Lawson Cypress | EM | C1 | 75(1) | 4(0) | 0.5 | 0.5 | 0.5 | 0.5 | Good | 20 | None at present. | None at present. | 0.9 | 2.55 |
| H23 | Prunus laurocerasus (Cherry Laurel) | EM | C1 | 75(1) | 4(0) | 0.5 | 0.5 | 0.5 | 0.5 | Good | 20 | None at present. | None at present. | 0.9 | 2.55 |
| T24 | Juglans regia (Walnut) | M | B1 | 490(1) | 9(3) | 6 | 6 | 6 | 6 | Good | 20 | None at present. | None at present. | 5.88 | 108.63 |
| T25 | Quercus petraea (Sessile Oak) | M | B1 | 510(1) | 9(3) | 3 | 6 | 5 | 6 | Good | 20 | None at present. | None at present. | 6.12 | 117.68 |
| G26 | Chamaecyparis lawsoniana (Lawson Cypress | M | B1 | 550(1) | 16(2) | 3 | 3 | 3 | 3 | Good | 20 | Part of linear group. | None at present. | 6.6 | 136.87 |
| G27 | Chamaecyparis lawsoniana (Lawson Cypress | M | B1 | 450(1) | 16(2) | 3 | 3 | 3 | 3 | Good | 20 | Part of linear group. | None at present. | 5.4 | 91.62 |
| T28 | Pyrus (Pear) | M | C1 | 200(1) | 5(2) | 1 | 2.5 | 3 | 2 | Fair | 10 | None at present. | None at present. | 2.4 | 18.1 |
| T29 | Malus sylvestris (Crab Apple) | M | C1 | 250(1) | 6(2) | 4 | 4 | 4 | 4 | Fair | 10 | None at present. | None at present. | 3 | 28.28 |
| T30 | Prunus cerasifera (Cherry Plum) | M | C1 | 270(1) | 4(1.7) | 4 | 4 | 4 | 4 | Fair | 10 | None at present. | None at present. | 3.24 | 32.98 |

| | | | | | | | | | | | | | | | |
|---|---|---|---|---|---|---|---|---|---|---|---|---|---|---|---|
| T31 | Fagus sylvatica (Beech) | M | B3 | 380(1) | 16(4) | 3 | 3 | 3 | 3 | Good | 20 | None at present. | None at present. | 4.56 | 65.33 |

# TREE CONSTRAINTS PLAN

**Notes & Legend:**

Category A trees
Category B trees
Category C trees
Category U trees
RPAs
Trees to be removed (red crowns and numbers)
BS5837 Specification Ground Protection
No Dig Permeable Hard Surface Treatment
Tree Protective Fencing
Proposed development

**Harper tree consulting**

www.harper-trees.co.uk


28 Rodbourne Close, Lymington, Hampshire, SO41 0LW.
Email: jonharper@harper-trees.co.uk
Tel: 07982 911104 or 01590 436272
www.harper-trees.co.uk
www.treesurveyshampshire.co.uk


| | |
|---|---|
| Client: Maverick Properties | Date: October 09th 2024 |
| | Ref: 2024005/TPP002 |
| Site: Sulby Croft | Scale @ A3: 1:300 |
| | Title: Tree Protection Plan |

# TREE REMOVAL PLAN

**Notes & Legend:**

Category A trees | Category B trees | Category C trees | Category U trees | RPAs | Trees to be removed (red crowns and numbers) | BS5837 Specification Ground Protection | No Dig Permeable Hard Surface Treatment | Tree Protective Fencing | Proposed development

**Harper tree consulting**

www.harper-trees.co.uk


28 Rodbourne Close, Lymington, Hampshire, SO41 0LW.
Email: jonharper@harper-trees.co.uk
Tel: 07982 911104 or 01590 436272
www.harper-trees.co.uk
www.treesurveyshampshire.co.uk


| | |
|---|---|
| Client: Maverick Properties | Date: October 09th 2024 |
| | Ref: 2024005/TRP002 |
| Site: Sulby Croft | Scale @ A3: 1:300 |
| | Title: Tree Removal Plan |

# TREE PROTECTION PLAN

**Notes & Legend:**

Category A trees
Category B trees
Category C trees
Category U trees
RPAs
Trees to be removed (red crowns and numbers)
BS5837 Specification Ground Protection
No Dig Permeable Hard Surface Treatment
Tree Protective Fencing
Proposed development

**Harper tree consulting**

www.harper-trees.co.uk


28 Rodbourne Close, Lymington, Hampshire, SO41 0LW.
Email: jonharper@harper-trees.co.uk
Tel: 07982 911104 or 01590 436272
www.harper-trees.co.uk
www.treesurveyshampshire.co.uk


| | |
|---|---|
| Client: Maverick Properties | Date: October 09th 2024 |
| | Ref: 2024005/TPP002 |
| Site: Sulby Croft | Scale @ A3: 1:300 |
| | Title: Tree Protection Plan |