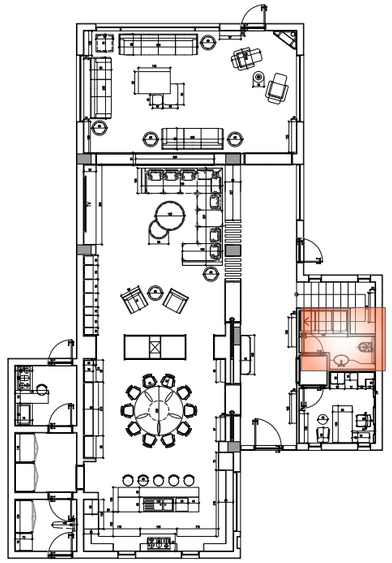

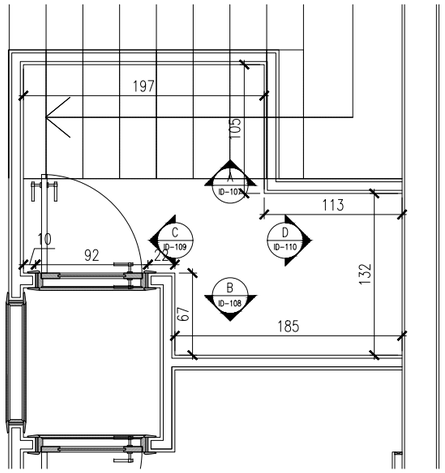

1
ID-101

BATHROOM

DIMENSION PLAN

SCALE 1:50M

Client:

Project:
PRIVATE VILLA

Area:
LONDON

rg concept

Lebanon - Jounieh
Jounieh Highway - Kallassy Bldg - RDC
Tel +961 9 916 303
rggrouplb@gmail.com

U.A.E - Dubai
Retro Gama Concept Interior Design LLC
Business Bay Tamani Arts Tower - 8th floor
mob +971 50 654 48 42 rgconcept@gmail.com

Syria - Damascus
Al Mazzeh Eastern Villas - Al Farabi street
tel +963 11 6133413
rggroupsyria@gmail.com

www.rggrp.me

Remarks :

Drawing title:
GROUND FLOOR BATHROOM

Revision:

Scale: 1:50

Sheet no:

THESE DRAWINGS ARE THE SOLE PROPERTY OF RG CONCEPT INTERIOR DESIGN ANY USAGE, COPY OR REP RODUCTION BY ANY PERSON OR INSTITUTION IN PART OR IN FULL WILL REQUIRE A PRIOR WRITTEN PERMISSION AND APPROVAL OF R.G.CONCEPT L.L.C. ANY UNWARRANT USAGE WILL BE LIABLE TO LEGAL ACTION. THE INFORMATION INCLUDED IN THESE DOCUMENTS HEREIN IS SUBJECT TO ERRORS AND CHANGES WITHOUT PRIOR NOTICE.

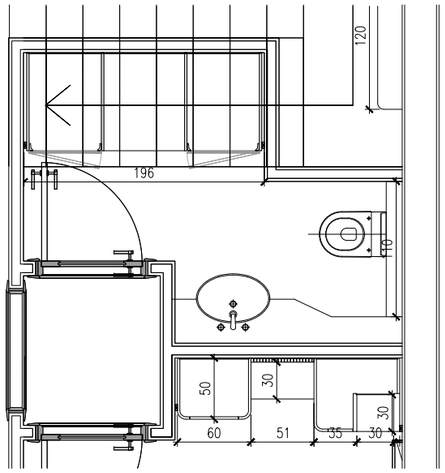

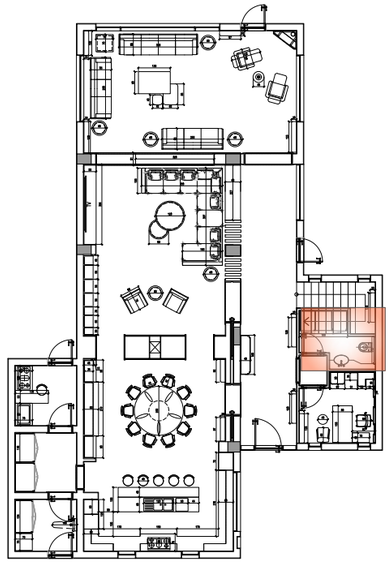

BATHROOM

2

ID-102

FURNITURE PLAN

SCALE 1:50M

Client:

Project:

PRIVATE VILLA

Area:

LONDON

rg concept

Lebanon - Jounieh
Jounieh Highway - Kallassy Bldg - RDC
Tel +961 9 916 303
rggrouplb@gmail.com

U.A.E - Dubai
Retro Gama Concept Interior Design LLC
Business Bay Tamani Arts Tower - 8th floor
mob +971 50 654 48 42 rgconcept@gmail.com

Syria - Damascus
Al Mazzeh Eastern Villas - Al Farabi street
tel +963 11 6133413
rggroupsyria@gmail.com

www.rggrp.me

Remarks :

Drawing title:

GROUND FLOOR BATHROOM

Revision:

Scale: 1:50

1:50 0 1m 2m

Sheet no:

THESE DRAWINGS ARE THE SOLE PROPERTY OF RG CONCEPT INTERIOR DESIGN ANY USAGE, COPY OR REP RODUCTION BY ANY PERSON OR INSTITUTION IN PART OR IN FULL WILL REQUIRE A PRIOR WRITTEN PERMISSION AND APPROVAL OF R.G.CONCEPT L.L.C. ANY UNWARRANT USAGE WILL BE LIABLE TO LEGAL ACTION. THE INFORMATION INCLUDED IN THESE DOCUMENTS HEREIN IS SUBJECT TO ERRORS AND CHANGES WITHOUT PRIOR NOTICE.

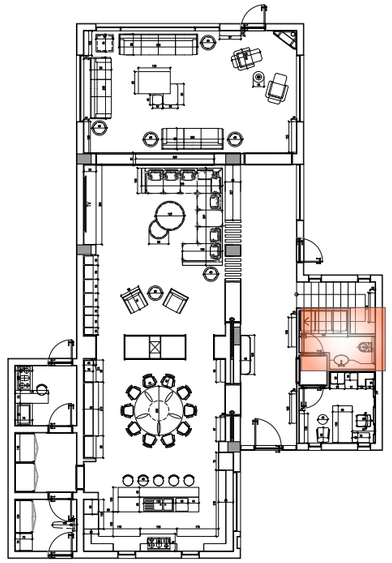

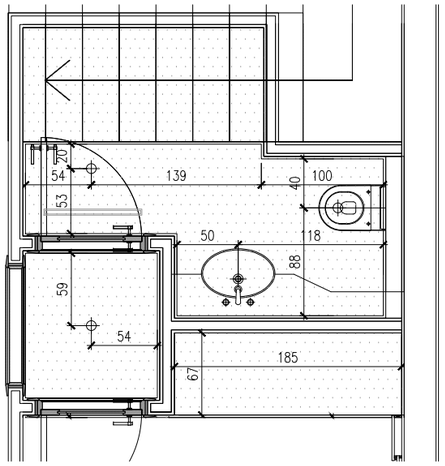

BATHROOM

3

ID-103

CEILING PLAN

SCALE 1:50M

Client:

Project:

PRIVATE VILLA

Area:

LONDON

rg concept

Lebanon - Jounieh
Jounieh Highway - Kallassy Bldg - RDC
Tel +961 9 916 303
rggrouplb@gmail.com

U.A.E - Dubai
Retro Gama Concept Interior Design LLC
Business Bay Tamani Arts Tower - 8th floor
mob +971 50 654 48 42 rgconcept@gmail.com

Syria - Damascus
Al Mazzeh Eastern Villas - Al Farabi street
tel +963 11 6133413
rggroupsyria@gmail.com

www.rggrp.me

Remarks :

Drawing title:

GROUND FLOOR BATHROOM

Revision:

Scale: 1:50

Sheet no:

THESE DRAWINGS ARE THE SOLE PROPERTY OF RG CONCEPT INTERIOR DESIGN ANY USAGE, COPY OR REP RODUCTION BY ANY PERSON OR INSTITUTION IN PART OR IN FULL WILL REQUIRE A PRIOR WRITTEN PERMISSION AND APPROVAL OF R.G.CONCEPT L.L.C. ANY UNWARRANT USAGE WILL BE LIABLE TO LEGAL ACTION. THE INFORMATION INCLUDED IN THESE DOCUMENTS HEREIN IS SUBJECT TO ERRORS AND CHANGES WITHOUT PRIOR NOTICE.

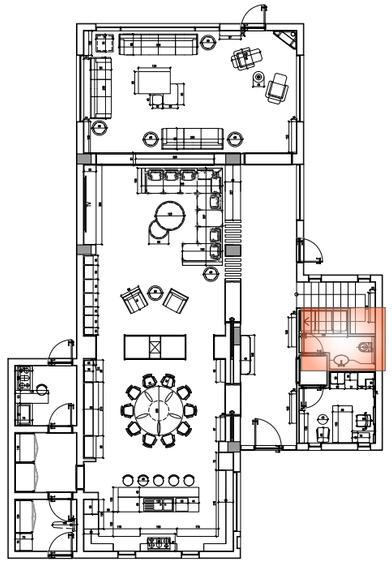

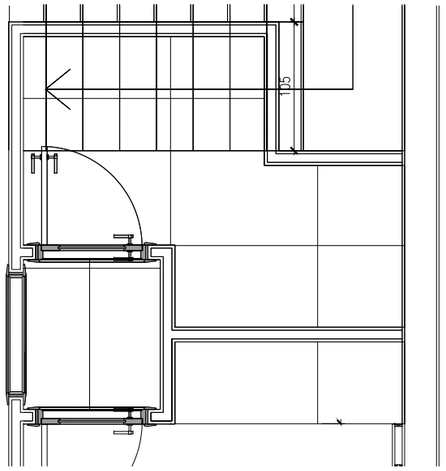

BATHROOM

4

ID-104

FLOORING PLAN

SCALE 1:50M

Client:

Project:

PRIVATE VILLA

Area:

LONDON

rg concept

Lebanon - Jounieh
Jounieh Highway - Kallassy Bldg - RDC
Tel +961 9 916 303
rggrouplb@gmail.com

U.A.E - Dubai
Retro Gama Concept Interior Design LLC
Business Bay Tamani Arts Tower - 8th floor
mob +971 50 654 48 42 rgconcept@gmail.com

Syria - Damascus
Al Mazzeh Eastern Villas - Al Farabi street
tel +963 11 6133413
rggroupsyria@gmail.com

www.rggrp.me

Remarks :

Drawing title:

GROUND FLOOR BATHROOM

Revision:

Scale: 1:50

1:50 0 1m 2m

Sheet no:

THESE DRAWINGS ARE THE SOLE PROPERTY OF RG CONCEPT INTERIOR DESIGN ANY USAGE, COPY OR REP RODUCTION BY ANY PERSON OR INSTITUTION IN PART OR IN FULL WILL REQUIRE A PRIOR WRITTEN PERMISSION AND APPROVAL OF R.G.CONCEPT L.L.C. ANY UNWARRANT USAGE WILL BE LIABLE TO LEGAL ACTION. THE INFORMATION INCLUDED IN THESE DOCUMENTS HEREIN IS SUBJECT TO ERRORS AND CHANGES WITHOUT PRIOR NOTICE.

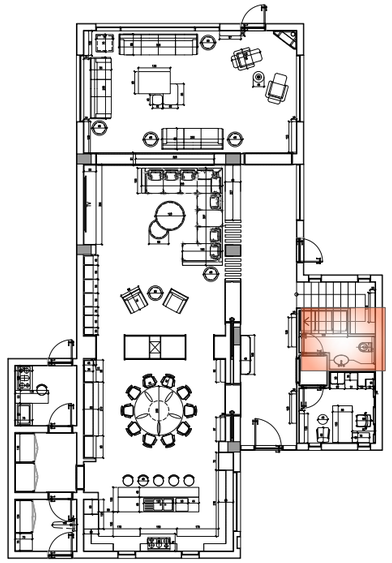

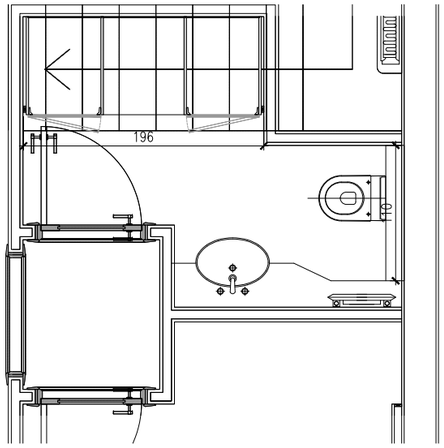

BATHROOM

5

ID-105

REDIATER PLAN

SCALE 1:50M

Client:

Project:

PRIVATE VILLA

Area:

LONDON

rg concept

Lebanon - Jounieh
Jounieh Highway - Kallassy Bldg - RDC
Tel +961 9 916 303
rggrouplb@gmail.com

U.A.E - Dubai
Retro Gama Concept Interior Design LLC
Business Bay Tamani Arts Tower - 8th floor
mob +971 50 654 48 42 rgconcept@gmail.com

Syria - Damascus
Al Mazzeh Eastern Villas - Al Farabi street
tel +963 11 6133413
rggroupsyria@gmail.com

www.rggrp.me

Remarks :

Drawing title:

GROUND FLOOR BATHROOM

Revision:

Scale: 1:50

Sheet no:

THESE DRAWINGS ARE THE SOLE PROPERTY OF RG CONCEPT INTERIOR DESIGN ANY USAGE, COPY OR REP RODUCTION BY ANY PERSON OR INSTITUTION IN PART OR IN FULL WILL REQUIRE A PRIOR WRITTEN PERMISSION AND APPROVAL OF R.G.CONCEPT L.L.C. ANY UNWARRANT USAGE WILL BE LIABLE TO LEGAL ACTION. THE INFORMATION INCLUDED IN THESE DOCUMENTS HEREIN IS SUBJECT TO ERRORS AND CHANGES WITHOUT PRIOR NOTICE.

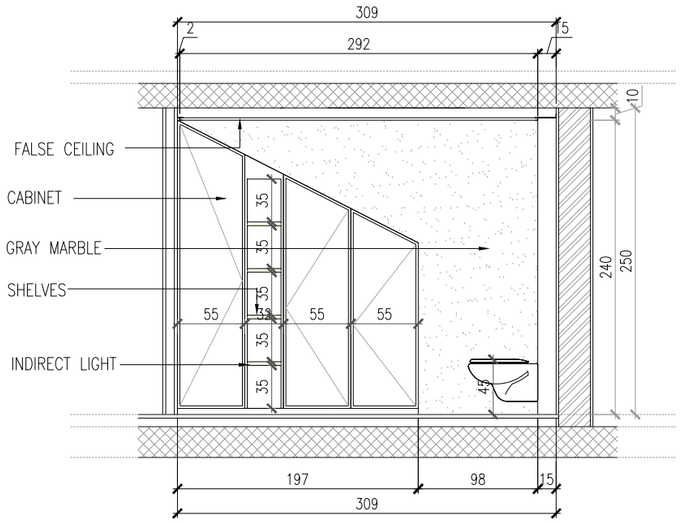

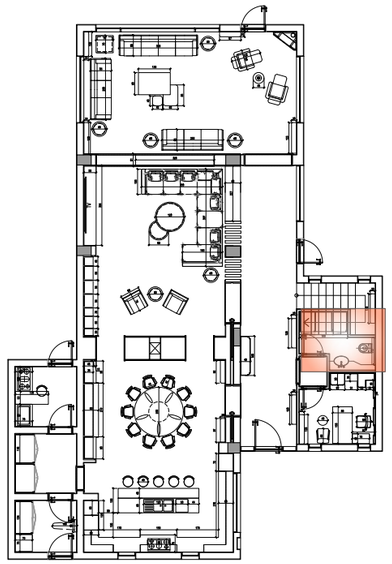

BATHROOM

A

ID-107

WALL ELEVATION

SCALE 1:50M

Client:

Project:

PRIVATE VILLA

Area:

LONDON

rg concept

Lebanon - Jounieh
Jounieh Highway - Kallassy Bldg - RDC
Tel +961 9 916 303
rggrouplb@gmail.com

U.A.E - Dubai
Retro Gama Concept Interior Design LLC
Business Bay Tamani Arts Tower - 8th floor
mob +971 50 654 48 42 rgconcept@gmail.com

Syria - Damascus
Al Mazzeh Eastern Villas - Al Farabi street
tel +963 11 6133413
rggroupsyria@gmail.com

www.rggrp.me

Remarks :

Drawing title:

GROUND FLOOR BATHROOM

Revision:

Scale: 1:50

1:50 0 1m 2m

Sheet no:

THESE DRAWINGS ARE THE SOLE PROPERTY OF RG CONCEPT INTERIOR DESIGN ANY USAGE, COPY OR REP RODUCTION BY ANY PERSON OR INSTITUTION IN PART OR IN FULL WILL REQUIRE A PRIOR WRITTEN PERMISSION AND APPROVAL OF R.G.CONCEPT L.L.C. ANY UNWARRANT USAGE WILL BE LIABLE TO LEGAL ACTION. THE INFORMATION INCLUDED IN THESE DOCUMENTS HEREIN IS SUBJECT TO ERRORS AND CHANGES WITHOUT PRIOR NOTICE.

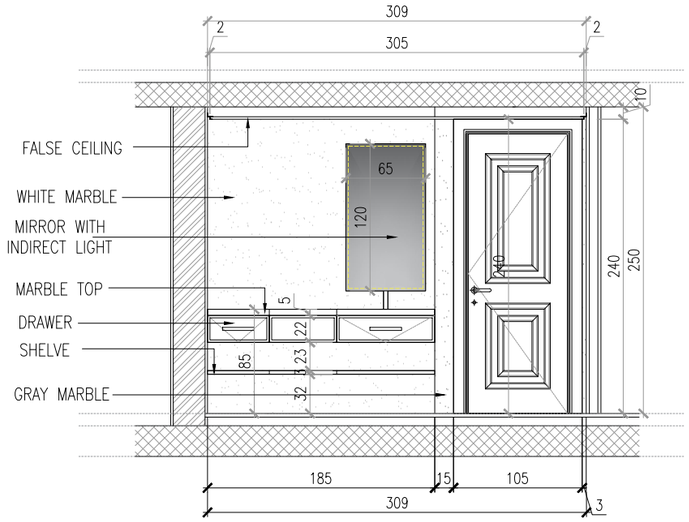

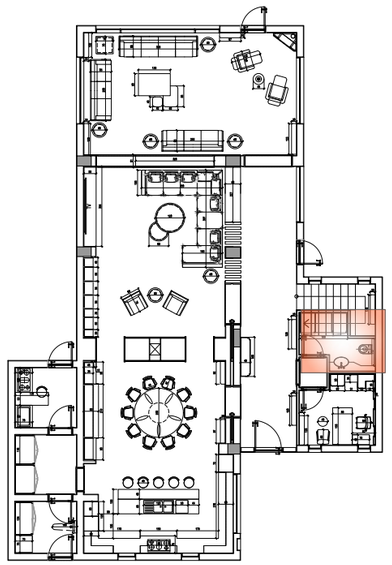

BATHROOM

B

ID-108

WALL ELEVATION

SCALE 1:50M

Client:

Project:

PRIVATE VILLA

Area:

LONDON

Lebanon - Jounieh
Jounieh Highway - Kallassy Bldg - RDC
Tel +961 9 916 303
rggrouplb@gmail.com

U.A.E - Dubai
Retro Gama Concept Interior Design LLC
Business Bay Tamani Arts Tower - 8th floor
mob +971 50 654 48 42 rgconcept@gmail.com

Syria - Damascus
Al Mazzeh Eastern Villas - Al Farabi street
tel +963 11 6133413
rggroupsyria@gmail.com

www.rggrp.me

Remarks :

Drawing title:

GROUND FLOOR
BATHROOM

Revision:

Scale: 1:50

Sheet no:

THESE DRAWINGS ARE THE SOLE PROPERTY OF RG CONCEPT INTERIOR DESIGN ANY USAGE, COPY OR REP RODUCTION BY ANY PERSON OR INSTITUTION IN PART OR IN FULL WILL REQUIRE A PRIOR WRITTEN PERMISSION AND APPROVAL OF R.G.CONCEPT L.L.C. ANY UNWARRANT USAGE WILL BE LIABLE TO LEGAL ACTION. THE INFORMATION INCLUDED IN THESE DOCUMENTS HEREIN IS SUBJECT TO ERRORS AND CHANGES WITHOUT PRIOR NOTICE.

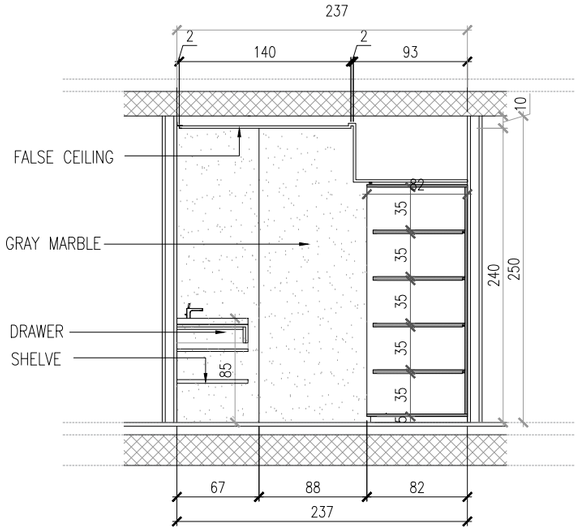

BATHROOM

WALL ELEVATION

C
ID-109

SCALE 1:50M

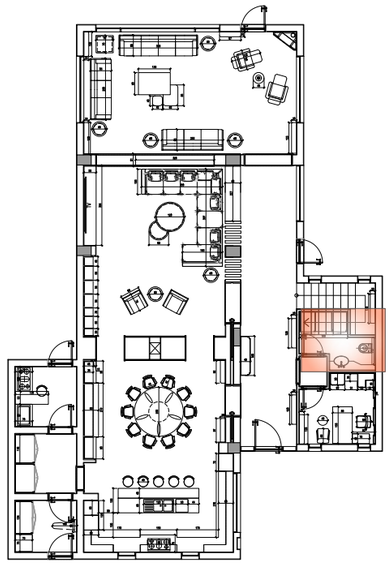

Client:

Project:
PRIVATE VILLA

Area:
LONDON

rg concept

Lebanon - Jounieh
Jounieh Highway - Kallassy Bldg - RDC
Tel +961 9 916 303
rggrouplb@gmail.com

U.A.E - Dubai
Retro Gama Concept Interior Design LLC
Business Bay Tamani Arts Tower - 8th floor
mob +971 50 654 48 42 rgconcept@gmail.com

Syria - Damascus
Al Mazzeh Eastern Villas - Al Farabi street
tel +963 11 6133413
rggroupsyria@gmail.com

www.rggrp.me

Remarks :

Drawing title:
GROUND FLOOR BATHROOM

Revision:

Scale: 1:50

Sheet no:

THESE DRAWINGS ARE THE SOLE PROPERTY OF RG CONCEPT INTERIOR DESIGN ANY USAGE, COPY OR REP RODUCTION BY ANY PERSON OR INSTITUTION IN PART OR IN FULL WILL REQUIRE A PRIOR WRITTEN PERMISSION AND APPROVAL OF R.G.CONCEPT L.L.C. ANY UNWARRANT USAGE WILL BE LIABLE TO LEGAL ACTION. THE INFORMATION INCLUDED IN THESE DOCUMENTS HEREIN IS SUBJECT TO ERRORS AND CHANGES WITHOUT PRIOR NOTICE.

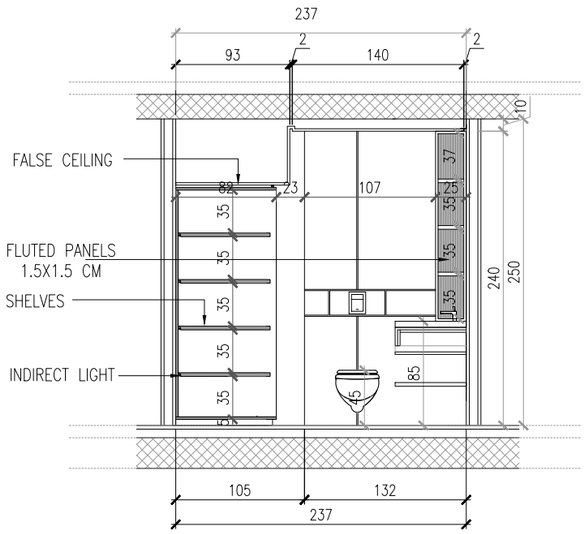

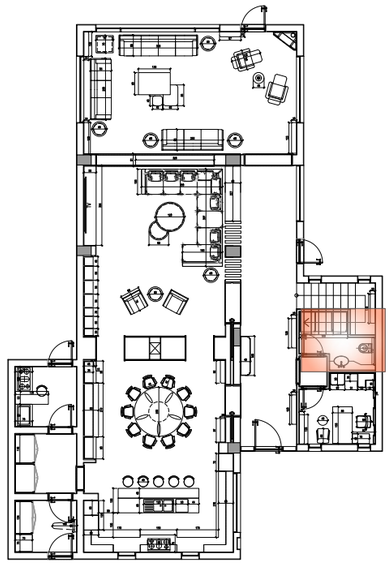

BATHROOM

WALL ELEVATION

D

ID-110

SCALE 1:50M

Client:

Project:

PRIVATE VILLA

Area:

LONDON

rg concept

Lebanon - Jounieh
Jounieh Highway - Kallassy Bldg - RDC
Tel +961 9 916 303
rggrouplb@gmail.com

U.A.E - Dubai
Retro Gama Concept Interior Design LLC
Business Bay Tamani Arts Tower - 8th floor
mob +971 50 654 48 42 rgconcept@gmail.com

Syria - Damascus
Al Mazzeh Eastern Villas - Al Farabi street
tel +963 11 6133413
rggroupsyria@gmail.com

www.rggrp.me

Remarks :

Drawing title:

GROUND FLOOR BATHROOM

Revision:

Scale: 1:50

1:50 0 1m 2m

Sheet no:

THESE DRAWINGS ARE THE SOLE PROPERTY OF RG CONCEPT INTERIOR DESIGN ANY USAGE, COPY OR REP RODUCTION BY ANY PERSON OR INSTITUTION IN PART OR IN FULL WILL REQUIRE A PRIOR WRITTEN PERMISSION AND APPROVAL OF R.G.CONCEPT L.L.C. ANY UNWARRANT USAGE WILL BE LIABLE TO LEGAL ACTION. THE INFORMATION INCLUDED IN THESE DOCUMENTS HEREIN IS SUBJECT TO ERRORS AND CHANGES WITHOUT PRIOR NOTICE.

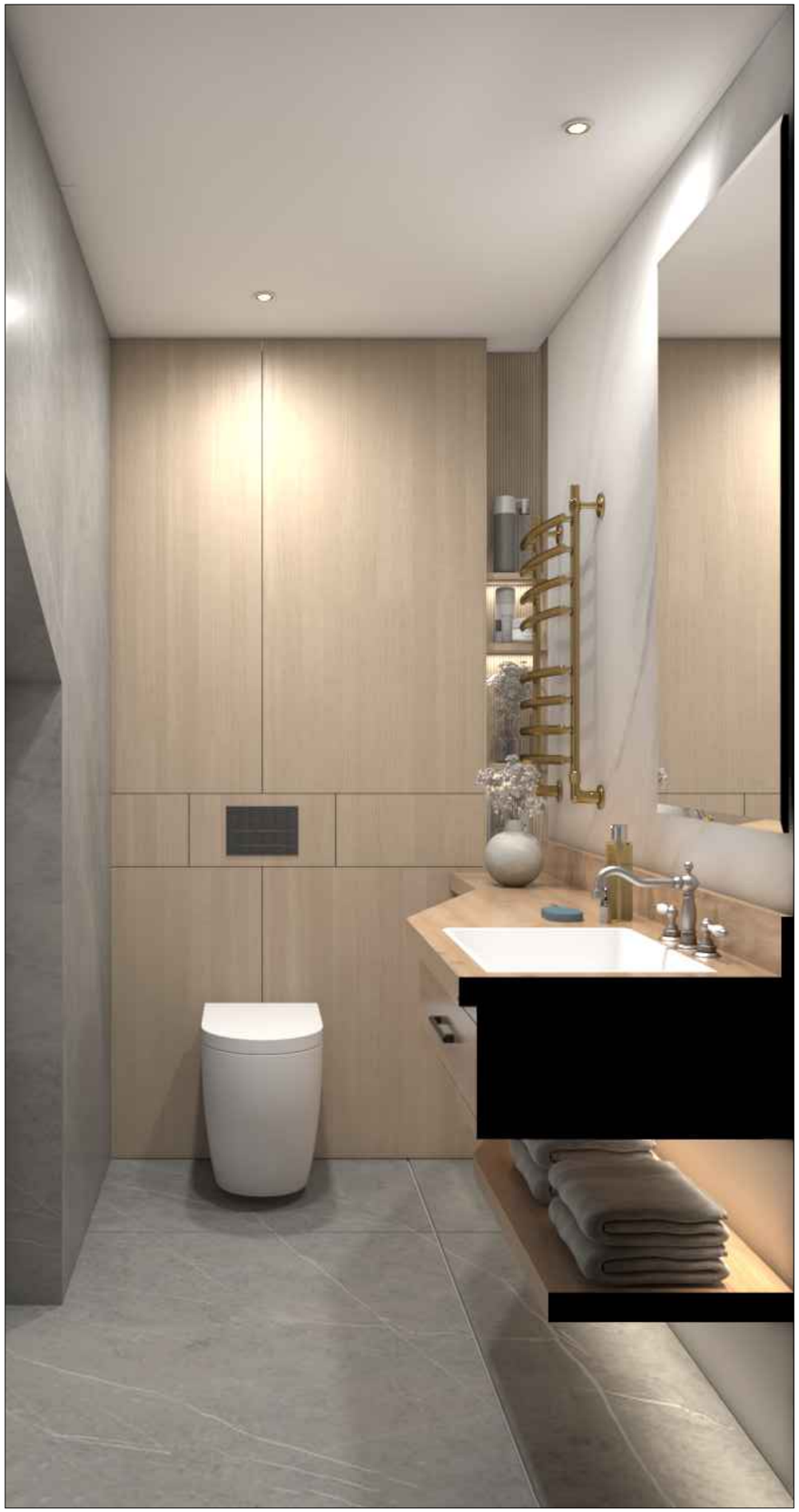

Client:

Project:
PRIVATE VILLA

Area:
LONDON

rg concept

Lebanon - Jounieh
Jounieh Highway - Kallassy Bldg - RDC
Tel +961 9 916 303
rggrouplb@gmail.com

U.A.E - Dubai
Retro Gama Concept Interior Design LLC
Business Bay Tamani Arts Tower - 8th floor
mob +971 50 654 48 42 rgconcept@gmail.com

Syria - Damascus
Al Mazzeh Eastern Villas - Al Farabi street
tel +963 11 6133413
rggroupsyria@gmail.com

www.rggrp.me

Remarks :

Drawing title:
GROUND FLOOR BATHROOM

Revision:

Scale: 1:50

Sheet no:

THESE DRAWINGS ARE THE SOLE PROPERTY OF RG CONCEPT INTERIOR DESIGN ANY USAGE, COPY OR REP RODUCTION BY ANY PERSON OR INSTITUTION IN PART OR IN FULL WILL REQUIRE A PRIOR WRITTEN PERMISSION AND APPROVAL OF R.G.CONCEPT L.L.C. ANY UNWARRANT USAGE WILL BE LIABLE TO LEGAL ACTION. THE INFORMATION INCLUDED IN THESE DOCUMENTS HEREIN IS SUBJECT TO ERRORS AND CHANGES WITHOUT PRIOR NOTICE.

Client:

Project:
PRIVATE VILLA

Area:
LONDON

rg concept

Lebanon - Jounieh
Jounieh Highway - Kallassy Bldg - RDC
Tel +961 9 916 303
rggrouplb@gmail.com

U.A.E - Dubai
Retro Gama Concept Interior Design LLC
Business Bay Tamani Arts Tower - 8th floor
mob +971 50 654 48 42 rgconcept@gmail.com

Syria - Damascus
Al Mazzeh Eastern Villas - Al Farabi street
tel +963 11 6133413
rggroupsyria@gmail.com

www.rggrp.me

Remarks :

Drawing title:
GROUND FLOOR BATHROOM

Revision:

Scale: 1:50

Sheet no:

THESE DRAWINGS ARE THE SOLE PROPERTY OF RG CONCEPT INTERIOR DESIGN ANY USAGE, COPY OR REP RODUCTION BY ANY PERSON OR INSTITUTION IN PART OR IN FULL WILL REQUIRE A PRIOR WRITTEN PERMISSION AND APPROVAL OF R.G.CONCEPT L.L.C. ANY UNWARRANT USAGE WILL BE LIABLE TO LEGAL ACTION. THE INFORMATION INCLUDED IN THESE DOCUMENTS HEREIN IS SUBJECT TO ERRORS AND CHANGES WITHOUT PRIOR NOTICE.