PROJECT DETAILS

Project Title :	DFE River Academy	**Project Ref :**	FS0949
Main Contractor :	B&K		

TECHNICAL SUBMISSION

For

External Lighting

At

DFE – River Academy

ISSUE STATUS :	
PRELIMINARY STAGE	
DESIGN STAGE	
CONSTRUCTION STAGE	X

Document Reference: *FS0949-DBS-ZZ-ZZ-TS-E-0004*

Revision No. : *C02*

Issue Date : *14/12/23*

Head Office
The Old Hospital, London Road, Newark,
Nottinghamshire, NG24 1JP
t: 01636 614300 **f:** 01636 605387

Birmingham Office
Fort Dunlop, Suite 418, Fort Parkway, Birmingham,
West Midlands, B24 9FD
t: 0121 730 4880

w: www.derry-bs.com **e:** info@derry-bs.co.uk

PROJECT DETAILS

Project Title :	DFE River Academy	**Project Ref :**	FS0949
Main Contractor :	B&K		

Main Contractor / Client : **Bowmer & Kirkland Ltd**
High Edge Court
Heage
Belper
Derbyshire
DE56 2BW

Consultant : **Couch Perry Wilkes**
St Johns House
30 East Street
Leicester
LE1 6NB

Mechanical & Electrical Services Contractor : **Derry Building Services Limited**

Newark Office
The Old Hospital
London Road
Newark
Nottinghamshire
NG24 1JP

Birmingham Office
Fort Dunlop
Suite 418
Fort Parkway
Birmingham
West Midlands
B24 9FD

derry building services

PROJECT DETAILS

Project Title :	DFE River Academy	**Project Ref :**	FS0949
Main Contractor :	B&K		

TECHNICAL SUBMISSION ISSUE REGISTER

Document Ref : FS0949-DBS-ZZ-ZZ-TS-E-0004p

Technical Submission For : External Lighting

Rev	Issue	Date	Issued by
P01	Issued for Review & Comment	21.10.22	Vaidas Perednis
P02	Luminaire details updated	15.12.22	Vaidas Perednis
P03	Ditch lighting control updated Rev 1	25.05.23	Vaidas Perednis
P04	Ditch lighting control updated Rev 2	18.09.23	Vaidas Perednis
C01	Ditch lighting control and fitting updated. Issued for Construction	13.10.23	Vaidas Perednis
C02	Ditch lighting full output time reduced to 5min.	14.12.23	Vaidas Perednis

Prepared by :	Ben Hage Electrical Design Engineer
Signed :	V.Perednis
On behalf of :	Derry Building Services
Checked by :	Neil Meredith Senior Electrical Design Engineer
Signed :	N.Meredith
On behalf of :	Derry Building Services

PROJECT DETAILS

Project Title :	DFE River Academy	**Project Ref :**	FS0949
Main Contractor :	B&K		

CONTENTS

1.0	Introduction
2.0	Proposal
3.0	Manufacturer's Literature
4.0	Calculations
5.0	Drawings

PROJECT DETAILS

Project Title :	DFE River Academy	Project Ref :	FS0949
Main Contractor :	B&K		

1.0 Introduction

The following information is a proposal of the Luminaires that we are planning to use for the External Lighting installation at the River Academy project.

We intend to proceed with the design based on the content of this document.

Subject to comments we will then formally appoint our lighting suppliers and develop the design further with additional information and working drawings.

PROJECT DETAILS

Project Title :	DFE River Academy	Project Ref :	FS0949
Main Contractor :	B&K		

2.0 Proposal

We have selected Thorn Lighting as our external lighting manufacturer, which enables us to fully achieve the design aspirations desired throughout.

Thorn Lighting have been chosen based on high build standards and quality of workmanship, innovative design and functionality, and integration with the design parameters.

The external lighting has been designed in alignment with the following documentation where applicable;

- CIBSE Lighting Guide 5
- CIBSE Lighting Guide 6
- Secure By Design (SBD) – Lighting against crime
- New Schools Secure By Design 2014
- BS EN 13201 – Road lighting performance requirements
- BS 5489 – Lighting of roads and public amenity areas
- ILP GN01 – The Reduction of Obtrusive Light

Extracts from the relevant guides are listed below:

Extract from LG5

Table 5.5 General performance requirements for exterior spaces (source: BS EN 12464-2[52])

Type of area task or activity	E_m (lx)	R_a (min)	U_o (min)	GRL (max)
General circulation areas:				
— walkways exclusively for pedestrians	5	20	0.25	50
— traffic areas for slowly moving vehicles (max 10 km/h, e.g. bicycles)	10	20	0.40	50
— regular vehicle traffic (max 40 km/h)	20	20	0.40	45
— pedestrian passages, vehicle turning, loading and unloading points	50	20	0.40	50
Parking areas:				
— light traffic e.g. parking areas of schools	5	20	0.25	55
— medium traffic e.g. parking areas of colleges or universities, office buildings, sports and multipurpose building complexes	10	20	0.25	50
— heavy traffic e.g. parking areas of major conference venues, major sports and multi-purpose building complexes	20	20	0.25	50

PROJECT DETAILS

Project Title :	DFE River Academy	Project Ref :	FS0949
Main Contractor :	B&K		

Extract from LG6

Table 2.2 Excerpt from BS EN 12464-2:2014 (reproduced by permission of BSI)

Ref. no.	Type of area, task or activity	$\bar{E}_m$ (lux)	U_o (–)	R_{GL} (–)	R_a (–)	Remarks
5.1.1	Walkways exclusively for pedestrians	5	0.25	50	20	
5.1.2	Traffic areas for slowly moving vehicles (max. 10 km/h), e.g. bicycles, trucks and excavators	10	0.40	50	20	
5.1.3	Regular vehicle traffic (max. 40 km/h)	20	0.40	45	20	At shipyards and in docks, R_{GL} may be 50
5.1.4	Pedestrian passage, vehicle turning, loading and unloading points	50	0.40	50	20	

Extract from Secure by Design(SBD)

Average levels of Illuminance in Lux	
Pedestrian only traffic	20 Lux*
Mixed vehicular and pedestrian	30 Lux*
Bus station passenger areas	25 Lux*
Urban large car park	
Short stay	30 Lux
Long stay	15 Lux
Urban small car park	
Short stay	20 Lux
Long stay	15 Lux
Urban local car park	10 Lux
Rural large car park	
Short stay	15 Lux
Long stay	15 Lux
Rural small car park	
Short stay	10 Lux
Long stay	10 Lux
Rural local car park	05 Lux
Sports stadium and similar venues (Escape,Anti Panic)	30 Lux**

*Dependent on Environmental Zone (see Light Pollution section on page 24)
**Minimum for Stands and Exit Areas

Further to review of relevant guidance and recommendations (as above) our design across the project is based on the following levels:

- Bin Store – 40 Lux, Uo – 0.25
- Perimeter – 20 Lux, Uo – 0.25
- Pathways – 5 Lux, Uo – 0.25
- Car Park Roadways – 10 Lux, Uo – 0.25
- Car Parks – 10 Lux, Uo – 0.25
- Access Ramp – 100 Lux Uo – 0.4

We believe the above levels are the most suitable when aiming to comply with LG5, LG6 & also SBD where possible.

PROJECT DETAILS

Project Title :	DFE River Academy	Project Ref :	FS0949
Main Contractor :	B&K		

For example, for 'perimeter lighting' LG5 & LG6 recommend 5 lux and SBD recommends – 20 lux (Also the SBD CCTV guidance notes a minimum of 5Lux). Therefore we concluded that 20 lux would be the most appropriate lighting level to achieve when considering the guidance available.

Further to this, entrance areas to each building will have enhanced levels in-line with Secure By Design recommendations (New schools secure by design 39.3)

Also for 'Carpark lighting' LG5 recommends 5 lux and SBD – 15 lux. Therefore we concluded that 10 lux would be the most appropriate lighting level to achieve when considering the guidance available.

Further to this, New schools secure by design 47.5 notes that a lower level of lighting that does not give witnesses a realistic chance of witnessing a crime may actually assist an intruder.

All external lighting circuits shall be controlled by an arrangement of photocell, time switch and manual override. This shall generally be achieved by contactors located adjacent to the local external lighting distribution board. The controls can be changed by the end user but shall initially be set up to activate when dark but switched off between the hours of 2300hrs and 0700.

Great consideration has been given to reduce the lux levels in the ditch which unfortunately is not possible without compromising the external lux levels that are required on this project. We therefore propose the following:

5No. post luminaires in car park and 3No. on driveway will be installed with back louvre to reduce lux levels around and in the ditch.

Additional PIR control to 11No. post luminaires added. Light levels output will be 10% of full output when no one is within the area. When PIR will be activated full output remains for 5 min when someone leaves the are the lantern reduces back down to absence level 10% output.
Controlling luminaires around ditch with PIR (Absence level 10% of max output) allows us to achieve lux levels below 1lux at the ditch.

- 06.1 Ditch _ Eav - 0.31lx / Emax – 0.57lux / Uo – 0.540
- 06.2 Ditch _ Eav - 0.03lx / Emax – 0.22lux / Uo – 0.099

Additional time switch of lighting groups around ditch to be introduced to switch off 11No. post luminaires to achieve low lux levels at the ditch between the hours of 22:00 to 23:00.
Switching off these luminaires allows us to achieve lux levels below 1lux at the ditch.

- 06.1 Ditch _ Eav - 0.11lx / Emax – 0.21lux / Uo – 0.556
- 06.2 Ditch _ Eav - 0.03lx / Emax – 0.21lux / Uo – 0.088

PROJECT DETAILS

Project Title :	DFE River Academy	Project Ref :	FS0949
Main Contractor :	B&K		

Site plan

Blue – Luminaires controlled via PIR (set to 10% output when no one is within the area) to be switched off between the hours of 22:00-07:00
Yellow – Luminaires to be switched off between the hours of 23:00-07:00

PROJECT DETAILS

Project Title :	DFE River Academy	**Project Ref :**	FS0949
Main Contractor :	B&K		

All lights on

Calculation Surface List

No.	Designation	E_{av} [lx]	E_{min} [lx]	E_{max} [lx]	u0	E_{min} / E_{max}
	06.1 Ditch (Eav-1lx, Uo-0.xx)	2.26	0.25	4.59	0.108	0.053
	06.2 Ditch (Eav-1lx, Uo-0.xx)	0.04	0.01	0.25	0.170	0.029

PROJECT DETAILS

Project Title :	DFE River Academy	Project Ref :	FS0949
Main Contractor :	B&K		

Ditch lights Off 22:00-7:00

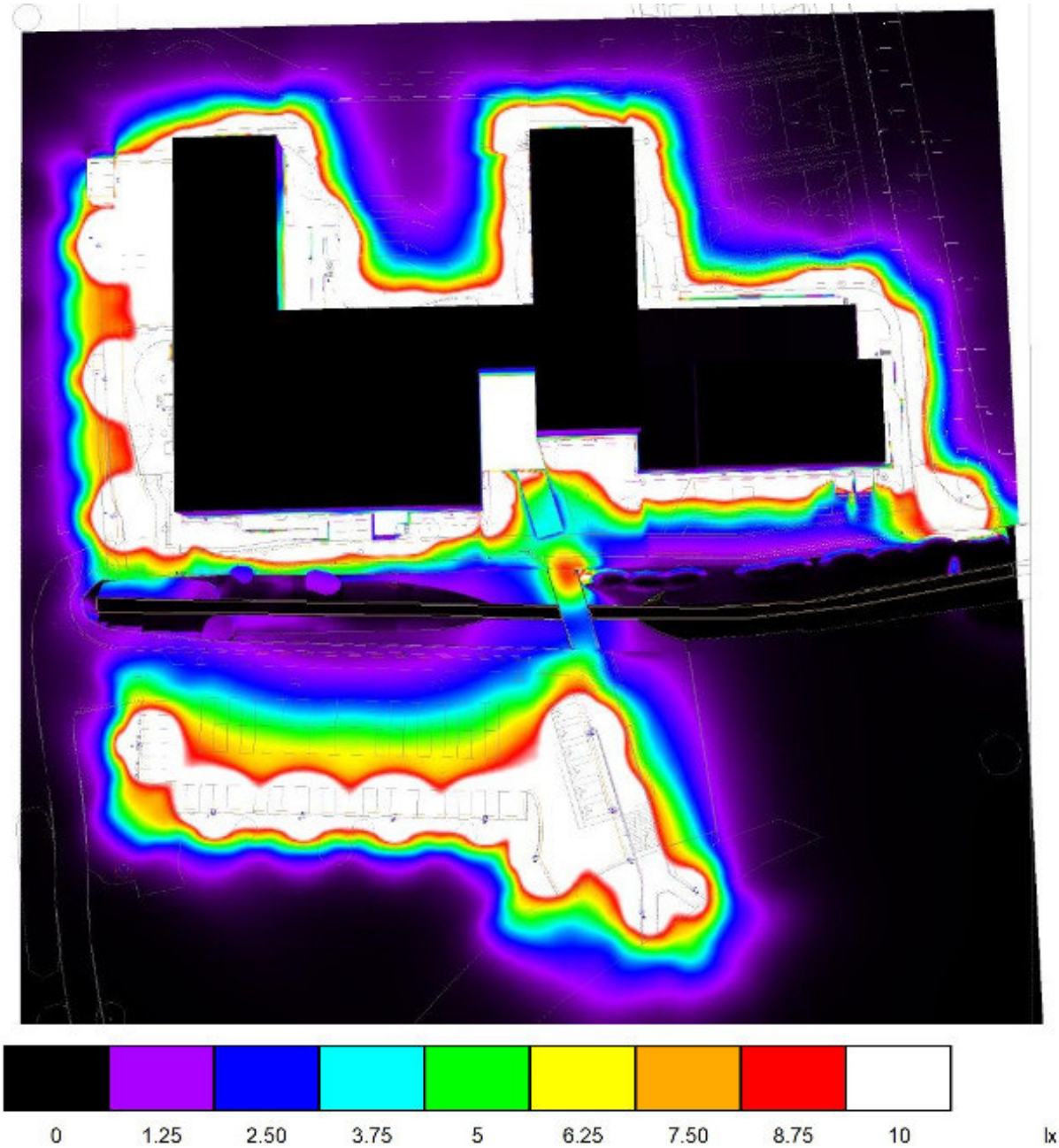

Calculation Surface List

No.	Designation	E_{av} [lx]	E_{min} [lx]	E_{max} [lx]	u0	E_{min} / E_{max}
	06.1 Ditch (Eav-1lx, Uo-0.xx)	0.11	0.06	0.25	0.556	0.242
	06.2 Ditch (Eav-1lx, Uo-0.xx)	0.03	0.00	0.21	0.088	0.011

PROJECT DETAILS

Project Title :	DFE River Academy	**Project Ref :**	FS0949
Main Contractor :	B&K		

Ditch lights 10% PIR

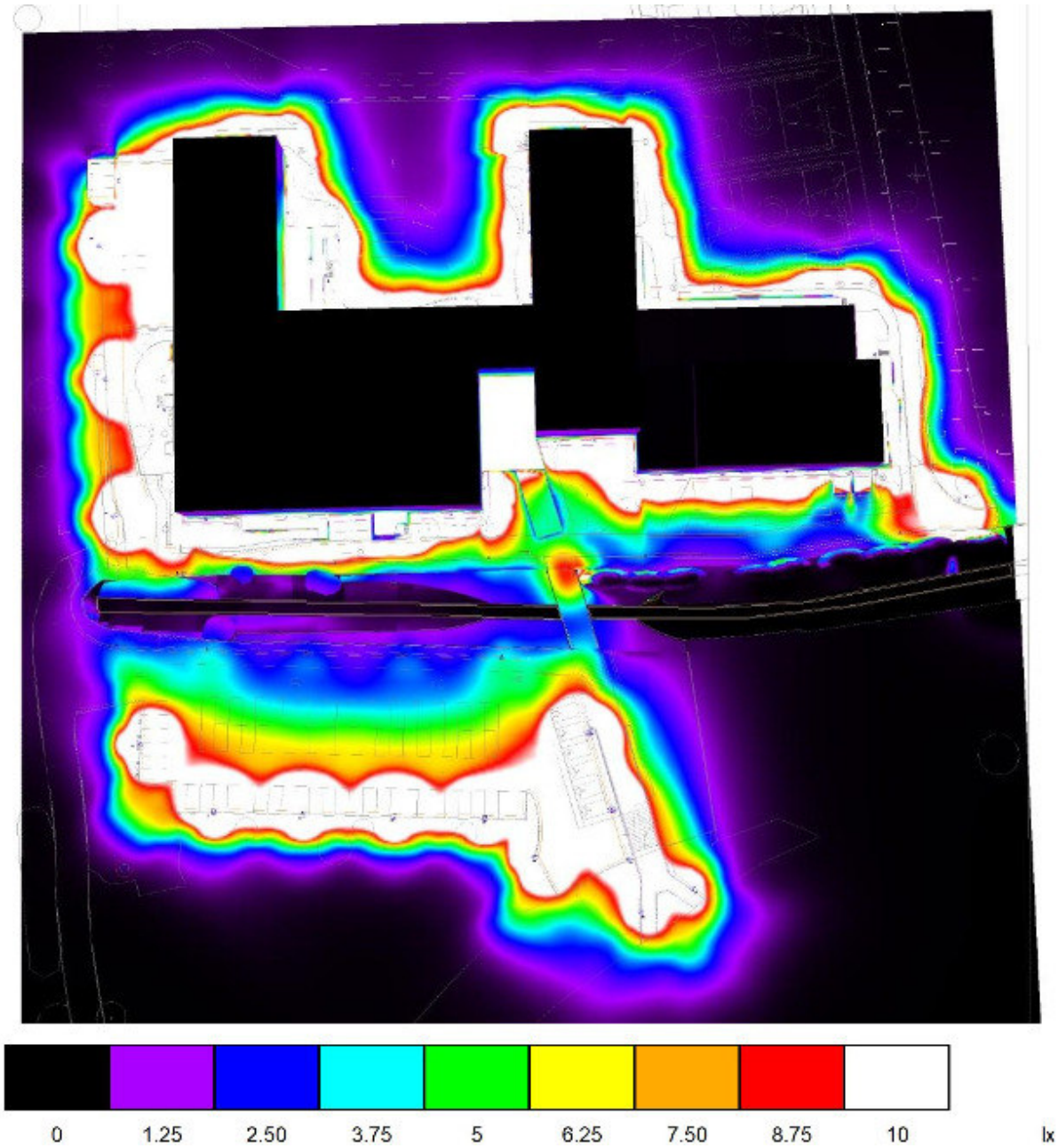

Calculation Surface List

No.	Designation	E_{av} [lx]	E_{min} [lx]	E_{max} [lx]	u0	E_{min} / E_{max}
06.1	Ditch (Eav-1lx, Uo-0.xx)	0.31	0.17	0.57	0.540	0.297
06.2	Ditch (Eav-1lx, Uo-0.xx)	0.03	0.00	0.22	0.099	0.013

PROJECT DETAILS

Project Title :	DFE River Academy	**Project Ref :**	FS0949
Main Contractor :	B&K		

3.0 Manufacturers Literature

Please refer to the following appendices:

- Thorn Piazza LED 2 data sheet references fitting Types 'Z1A' & 'Z1B'
- Thorn Isaro Pro data sheet references fitting Types 'Z2A' , 'Z2B' , 'Z2C' , 'Z2D' & 'Z2E'
- Thorn Lara Varioflex 300 data sheet references fitting Type 'Z4'
- Thorn LEDFIT data sheet references fitting Type 'Z5A' , 'Z5B' & 'Z5BC'

THORN
LIGHTING

PIAZZA II LED

Path lighting with maximised efficiency & minimal light pollution

Piazza II LED

An outdoor bulkhead featuring less than 2.5% upward light and a specialised light distribution for optimal path lighting.

A new design and specialised optics make the new Piazza II LED a champion of outdoor lighting.

An efficient 106 lm/W LED light source paired with an effective light distribution increases the use of light while maximising energy savings. The precision optics limit the ULOR 2.5% or less which reduces wasted light and light pollution. The tailor made light distribution stays close to the wall and while casting light in a wide beam to each side allowing 12 metre spacing at 3 and 4 metre mounting heights – ideal for path lighting around buildings. The addition of optional photo sensor or DALI control can provide additional energy savings through lighting control.

The new contemporary design offers a high IP65 ingress rating allowing it to be installed in harsh outdoor conditions which require protection from rain, dust and insect ingress. Additionally this luminaire offers an IK10 impact rating and comes with tamper resistant screws as standard.

Minimal light pollution

Unlike many outdoor lighting products which lack optical control and contribute to light pollution, Thorn's Piazza II LED features a precise and directional LED light source. Light is directed only where it's needed, without disturbing neighbours, contributing to sky glow or harming the environment or nearby wildlife.

Quality light

Piazza II LED provides good quality light with a colour temperature of 4 000 K and a CRI of 80, meaning colours remain clear. This keeps outdoor spaces safe and comfortable at night.

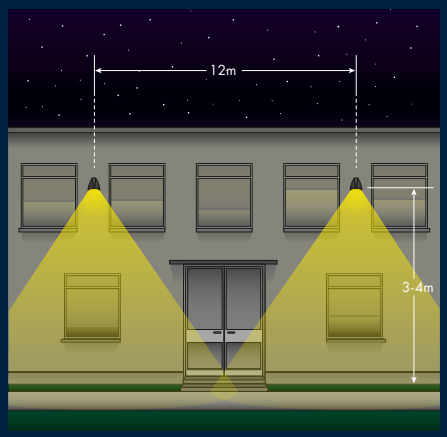

Highly efficient

Piazza II LED's efficacy of over 106 lm/W meets requirements for the UK's Enhanced Capital Allowance (ECA) scheme. For more efficient lighting control, DALI versions are available, as well as versions with photosensors so the luminaire can be dimmed or switched off in response to levels of ambient light.

Product specification

thornlighting.com/PIA2

Application	Perimeter walls, social housing, schools and warehouses
Lumen Output	1690 lm/2 700 lm
Luminaire efficacy	106 lm/W
Lifetime	60 000 hours L70B50 @ 25°C
Size	380 x 305 x 184 mm
CRI	80
Colour Temperature	4 000 K
Switch	DALI
Emergency	Central Battery and integrated 3 hour emergency

Design
A modern, robust outdoor wall light with precise lens optics.

Controls
HF, DALI, photosensor

Optics
Precision lighting control using optimised lens optics for wide spacing and minimal upward light.

Installation
BESA and surface mounted conduit compatible.

Standards
IP65 IK10 CE

Light source information
3 MacAdam ellipse

Materials/Finish
Body: cast aluminium and polycarbonate, anthracite.
Diffuser: polycarbonate.

To specify state:
A robust LED outdoor wall-mounted luminaire with less than 2.5% upward light, IP65, IK10 rating, and tamper resistant screws.
Available in 1690 or 2 700 lumen outputs, 4 000 K, E3, E3TX, DALI or/and photo sensor options.
As Thorn Piazza II LED.

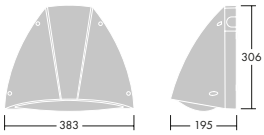

Piazza II LED

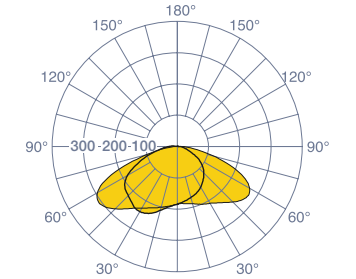

cd/klm ULOR: 0% DLOR: 100% LOR: 100%

5 YEAR GUARANTEE

As a globally leading luminaire manufacturer, Thorn Lighting provides a five-year warranty for its complete product range within all European Countries.
thornlighting.com/guarantee

Thorn Lighting is constantly developing and improving its products. All descriptions, illustrations, drawings and specifications in this publication present only general particulars and shall not form part of any contract. The right is reserved to change specifications without prior notification or public announcement. All goods supplied by the company are supplied subject to the company's General Conditions of Sale, a copy of which is available on request. All measurements are in millimetres and weights in kilograms unless otherwise stated.
02/2020 (INT)

WE MAKE LIGHT WORK

THORN

LIGHTING

ISARO PRO

Built to last

THORN

BUILT TO LAST

This robust and high-performance LED lantern brings comfort and safety to any road or street. Pressure to reduce energy costs and carbon emissions for outdoor lighting is stronger than ever. High-quality LED street lanterns offer a great solution, thanks to clever design, highly efficient light sources, long life and smart controls.

ISARO PRO

SMART LIGHTING

Isaro Pro incorporates many control solutions such as InCity, our state-of-the-art intelligent outdoor lighting system: save energy, provide light only when and where it is required and control the whole system from a simple dashboard. Combine it with our expert service team, and you'll get revolutionary lighting without the risk.

BEST IN CLASS ROAD AND STREET OPTICS

STREET ORIENTED DISTRIBUTION

Street Comfort (SC) | Wide Street (WS) | Extra Wide Street (EWS) | Extra Wide Street Comfort (EWC) | Wide Street Comfort (WSC) | Extensive Street (ES)

ROAD ORIENTED DISTRIBUTION

Extra Narrow Road (ENR) | Narrow Road (NR) | Tight Road (TR) | Road Comfort (RC) | Wide Road (WR) | Wet Road (RWT)

ROAD ORIENTED DISTRIBUTION

Extra Wide Road (EWR) | Staggered Road (SR)

PEDESTRIAN CROSSING

Pedestrian Crossing (IVS)

CONTRACTOR FRIENDLY

Isaro Pro is designed to make life easy for contractors. With internal components easily accessed from above without the need for tools, maintenance couldn't be simpler. It is available pre-wired and its automatic disconnect function means maintenance is safe.

R-PEC® OPTIC

Isaro Pro features the best in class optical performance of the R-PEC® optic. R-PEC® offers several precision light distributions, achieving wide column spacing, excellent uniformity plus no waste or obtrusive light.

TILTING TECHNOLOGY

Very versatile installation thanks to our tilting technology where using the same spigot you can achieve lateral (-15°/+15°) and top (0°/+20°) mounting with a wide choice of angles, by steps of 5°.

A FUTURE PROOF SOLUTION

Made of top-quality alloy, Isaro Pro is built to withstand all conditions, and to cope with physical impact and vibration. With a lifetime up to 100 000 hours, it guarantees years of reliable performance, ensuring a low-cost of ownership. And with connectivity built in, it's a truly futureproof solution. As well as being robust, this modern lantern is slim, sleek and performs brilliantly. With light output of up to 21 300 lm with 2 sizes, Isaro Pro is powerful enough to handle roads & streets, residential areas, car parks and walking/cycling paths. Because every application is different, Isaro Pro uses Thorn's unique R-PEC® optic to offer unprecedented optical flexibility. A choice of several precise light distributions is available for highly efficient and comfortable light, exactly where it is needed, whether lighting a residential street, a busy road or a pedestrian crossing.

APPLICATION AREAS

ROADS

CAR PARKS

RESIDENTAL AREAS

WALKING/CYCLING PATHS

Built to last

Isaro Pro is built to withstand almost everything that nature and the outdoor environment can throw at it. With an IP66 rating for ingress protection and IK09 for impact, the luminaire also has strong corrosion resistance and vibration resistance. There are few applications Isaro Pro can't handle.

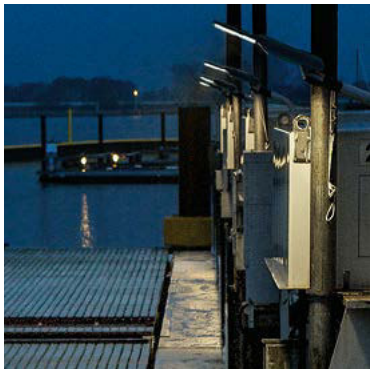

Corrosion resistant

Thanks to the best in class alloy and the specific fixing system treatment, Isaro Pro has strong corrosion resistance and easliy reaches Category 5 (C5 – very high corrosivity) according to ISO 9223 – Corrosion of metal and alloys.

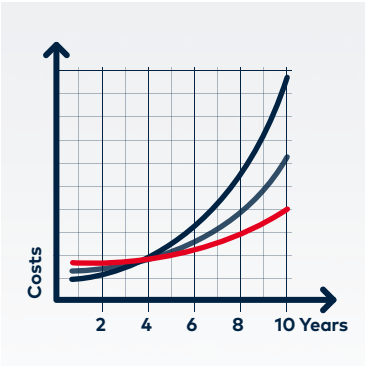

Great ROI potential

Isaro Pro's long life (up to 100 000 h) and efficacy of up to 160 lm/W in addition to a wide choice of controls (radio frequency, daylight sensor and others) mean that overall cost of ownership is low, ensuring a quick ROI (Return of Investment) but also allowing operators to make significant long-term savings. The ability to easily add or replace internal components including the driver, LEDs and controls, means the luminaire is truly futureproof.

- Existing 70 W SON HID
- ISARO PRO 12LED WS
- ISARO PRO 12LED WS + Light management

ISARO PRO CONFIGURATION GUIDE

thornlighting.com/ISRP

IP	12L	70	740	NR	CLO	BPS550	HFX	SP	CL1	N7	RF	T60F	W6	R9006
Range	**LED**	**mA**	**CCT/CRI**	**Optic**	**CLO**	**Diming**	**DALI**	**Fuse**	**Safety**	**Photocell**	**Comm**	**Spigot**	**Wiring**	**Colour**
														Optional
														RALxxx Different RAL possibility
														Optional
													XX m	Several lengths of wires
													Optional	
												L42E	Pre-fitted 42 mm spigot lateral 0°	
												L60E	Pre-fitted 60 mm spigot lateral 0°	
												T60F	Pre-fitted 60 mm spigot post top +5°	
												T76F	Pre-fitted 76 mm spigot post top +5°	
												M42	42 mm spigot non-fitted for freedom of position	
												M60	60 mm spigot non-fitted for freedom of position	
												M76	76 mm spigot non-fitted for freedom of position	
											Optional			
											RF	RF Incity		
										Optional				
										N3	3 pin NEMA socket			
										N7	7 pin NEMA socket			
										Z4	4 pin ZAGHA socket			
										PM	Minicell			
									CL1	Class I electrical (earthed)				
									CL2	Class II electrical (double insulated)				
								Optional						
								SP	10 kV multi pulse surge protection					
							Optional							
							HFX	DALI Dimmable						
							Optional							
						BPL	Bi Power Power Line							
						LRT	Light Reduction Twin Phases							
						BPSX	Bi-Power switchable with different diming profiles							
						BPX	Bi-Power with different diming profils							
					Optional									
					CLO	Constant Light Output								
				R-PEC®	All R-PEC® optics available									
			730	CRI 70 – 3000 K										
			740	CRI 70 – 4000 K										
			830	CRI 80 – 3000 K										
			840	CRI 80 – 4000 K										
		ALO	Adjustable lumen output											
		35 to 105	350 mA to 1050 mA											
	12L to 72L	From 12 LEDs to 72 LEDs												
IP	Isaro Pro													

Up to 10 kV Single Pulse as standard
Up to 21 300 lm
Up to 160 lm/W
Up to 100 000 h L90 B10 @25°C

IK09 IP66 25°C 35°C* 50°C*

* ambient temperature available depending on lumen output

Accessories
IK10 accessory
Back, front and side louvres

Material
Full Die cast Aluminium and flat glass

Standards

Isaro Pro S

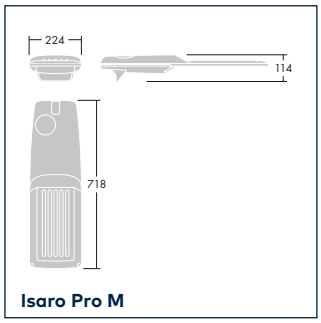

Isaro Pro M

Configure the ideal product solution with myProduct. The myProduct configurator allows you to easily configure a luminaire according to your needs. **Try it now at http://www.thornlighting.com/myproduct**

5 YEAR GUARANTEE

As a globally leading luminaire manufacturer, Thorn Lighting provides a five-year warranty for its complete product range within all European Countries. thornlighting.com/guarantee

Thorn Lighting is constantly developing and improving its products. All descriptions, illustrations, drawings and specifications in this publication present only general particulars and shall not form part of any contract. The right is reserved to change specifications without prior notification or public announcement. All goods supplied by the company are supplied subject to the company's General Conditions of Sale, a copy of which is available on request. All measurements are in millimetres and weights in kilograms unless otherwise stated. 02/2020 (INT)

WE MAKE LIGHT WORK

LARA VARIOFLEX 300 2200 830/35/40 96635286

LED Bulkhead

LED Bulkhead with homogenous light emmiting surface, FLEX technology, IP65 for indoor and outdoor applications.Total luminous flux: 2200 lm, Luminaire input power: 20.5 W,Lamp efficacy: 107 lm/W. Colour rendering Ra > 80, colour temperature 3000/3500/4000 K adjustable via switch. Lifetime: 50.000h L80, Chromaticity tolerance (initial MacAdam): 4, Impact strength: IK10, compatible with Plug&Play Emergency kit for 3 hour emergency conversation. Bezel and eyelid trim available as accessory. BESA compatible. Body: polycarbonate, white. Diffuser: polycarbonate, opal. Input power adjustable on site by 3 step (Flex1 - 100%, FLEX2 - 80%, FLEX3 - 50%). Dimensions: Ø300 x 75 mm, weight: 1.5 kg

TE_LARAVARIOFLEX_F_300_BLANK_WH_persp.jpg

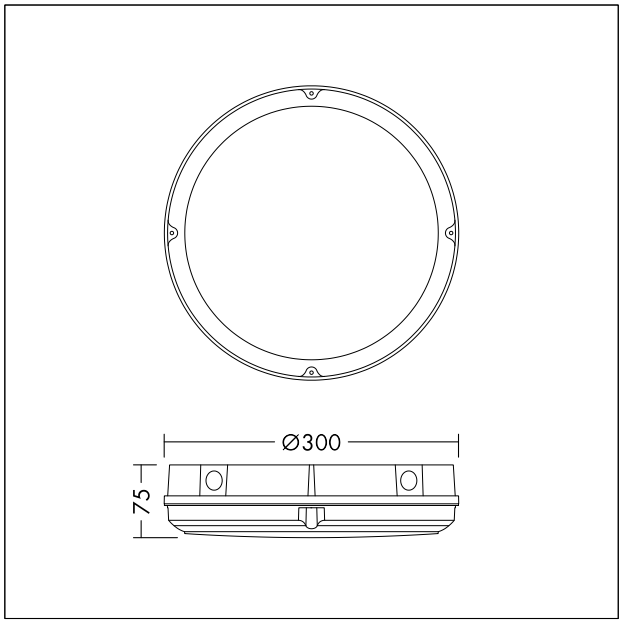

TE_LARAVARIOFLEX_M_300.wmf

Light Distribution STD - standard

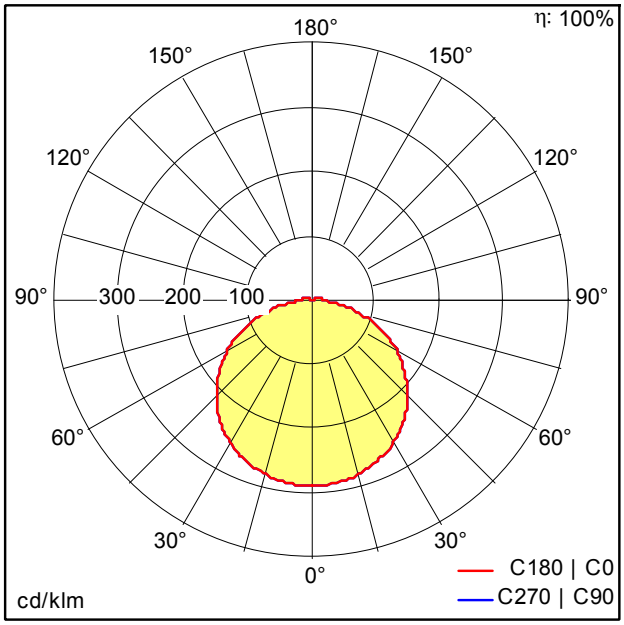

TE_LARA_VARIOFLEX_300_2200_840_FLEX1.ldt

- Light Source: LED
- Luminaire luminous flux*: 2200 lm
- Luminaire efficacy*: 107 lm/W
- Colour Rendering Index min.: 80
- Correlated colour temperature: 3000-4000 Kelvin
- Chromaticity tolerance (initial MacAdam): 4
- Rated median useful life*:
  L80 50000h at 25°C
- Ballast: 1x LED_Con
- Luminaire input power*: 20.5 W Power factor = 0.9
- Dimming: Fixed output
- Total harmonic distortion (THD): 25.00 %

This product contains a light source of energy efficiency class D.

All values marked with an * are rated values. Luminous flux and connected electrical load are subject to an initial tolerance of +/- 10%. Unless stated otherwise, the values apply to an ambient temperature of 25°C.

IEC EN 60598-1 RG 0 RoHS IP65 IK10 850°C Ta -20 +40

We reserve the right to make technical changes without prior notice. 29.03.2022 © ThornEco

LARA/SARA EYELID TRIM 300 BK

96635300

Eyelid trim black,

Eyelid trim black, for LARA VARIOFLEX and SARA VARIOFLEX 300 bulkheads.Material: PC. Bio degradeable PLA plastic bag, compostable according to DIN EN 13432. Dimensions: Ø305 x 75 mm, weight: 0.22 kg.

TE_LARA_F_300_EYELID_BL_accessor_persp.jpg

We reserve the right to make technical changes without prior notice. 29.03.2022 © ThornEco

LED Fit

An ultra lightweight, reliable and efficient alternative to general purpose HID floodlights with best in class optic

- Ultra lightweight, compact design for ease of installation and minimal aesthetic impact
- True asymmetric optic provides light distribution and excellent light control (0cd at 90°) with no need to tilt
- Maintenance free for 50 000 hours lifetime
- Reduce energy consumption by approximately 80% compared to similar HIT solutions

Photographs, line drawings and photometric data are representative only. For specific product detail please select an individual product.

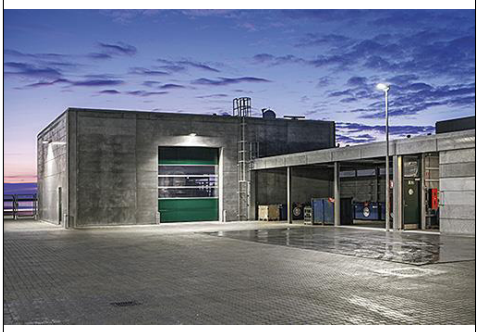

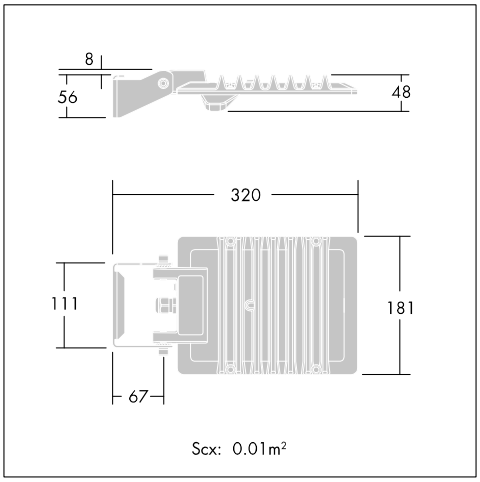

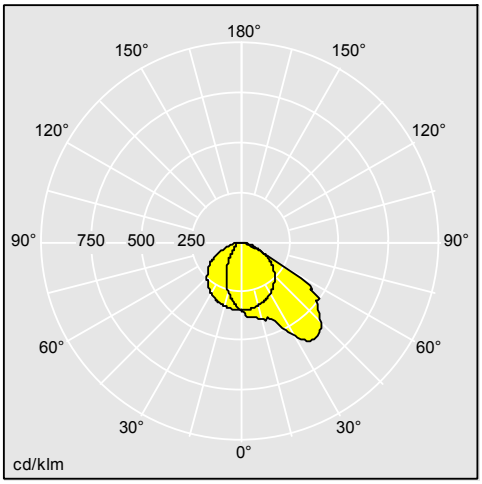

96628333

Material/Finish
Body : die-cast aluminium light grey 150 sanded textured (close to RAL9006)
Stirrup : aluminium
(EN AC-46000)
Visor : polycarbonate with external surface powder coated RAL 9006 (light grey)
Standard corrosion class: C3

Installation/Mounting
Pre-wired with 60cm cable.
Stirrup can be fixed via three fixation points - one M10 and two M8 - and is reversible allowing different mounting positions.

Specification
To specify state:
A simple, reliable and efficient alternative to general purpose HID floodlights with true asymmetric optic to cover the requirements of low area lighting, building surroundings and facade lighting. Ultra lightweight, compact design for ease of installation and minimal aesthetic impact available in 2 sizes - Small and Medium - with lumen packages of 4.500lm and 9.000lm and high mechanical resistance (IP66, IK07). The reversible mounting stirrup allows different mounting positions to cover all the applications needs.
As Thorn LED Fit

IP66, IK07, SC1, CE

Thorn Lighting is constantly developing and improving its products. The right is reserved to change specifications without prior notification or public announcement.
© Thorn Lighting

LED Fit

Ordering Guide

Description	ILCOS Code	Socket	Wt (kg)	SAP Code
LED Fit				
LEDFIT S 45W A/S CL1 L840	LED		1,7	96628332
LEDFIT M 90W A/S CL1 L840	LED		3	96628333
LEDFIT S 45W A/S CL1 L830	LED		1,7	96633103
LEDFIT M 90W A/S CL1 L830	LED		3	96633104

Thorn Lighting is constantly developing and improving its products. The right is reserved to change specifications without prior notification or public announcement.
© Thorn Lighting

PROJECT DETAILS

Project Title :	DFE River Academy	**Project Ref :**	FS0949
Main Contractor :	B&K		

4.0 Calculations

Refer to the following document:

Ref: FS0949-DBS-ZZ-ZZ-CA-E-0002 – External Lighting Calculations

PROJECT DETAILS

Project Title :	DFE River Academy	**Project Ref :**	FS0949
Main Contractor :	B&K		

5.0 Drawings

FS0949-DBS-XX-XX-DR-E-9020 – External Electrical Services Layout