PBM2_RHH_STL_GW_EU_REAR-LOAD - UNIT DIMENSIONS

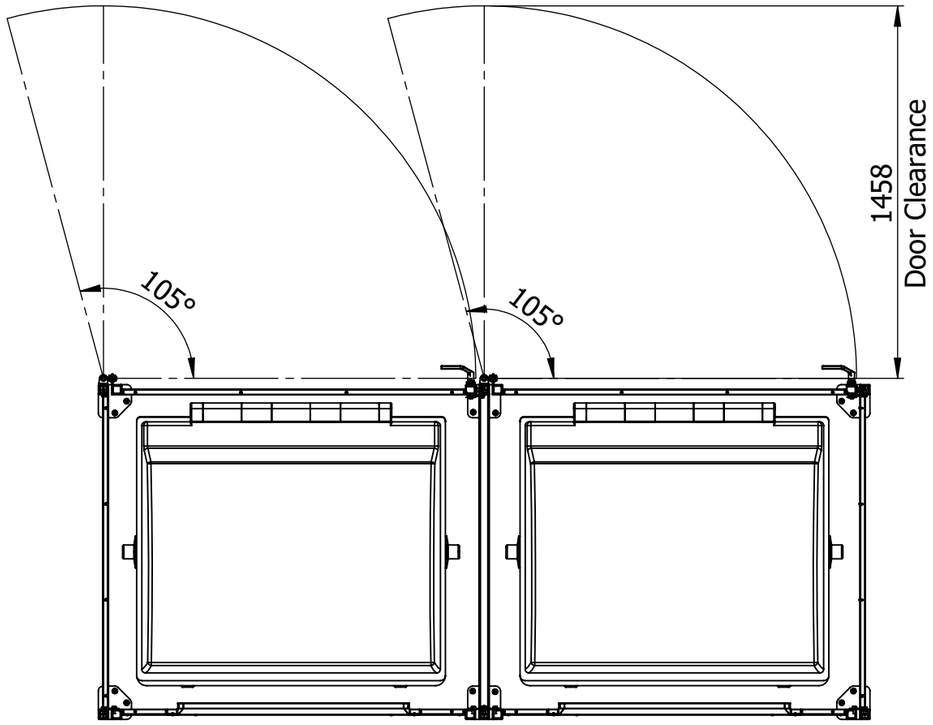

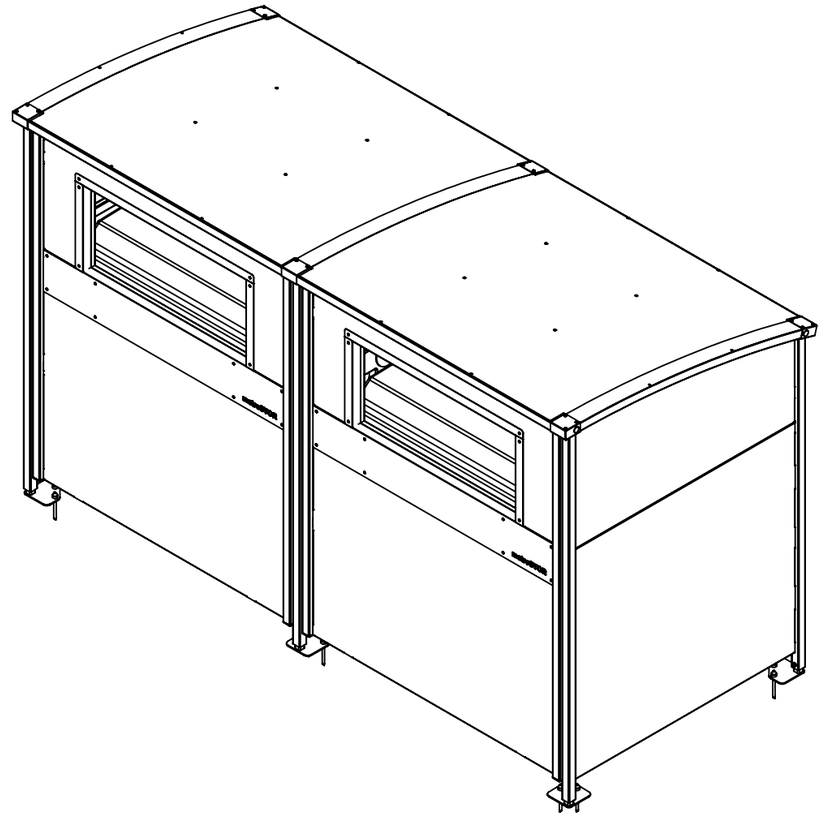

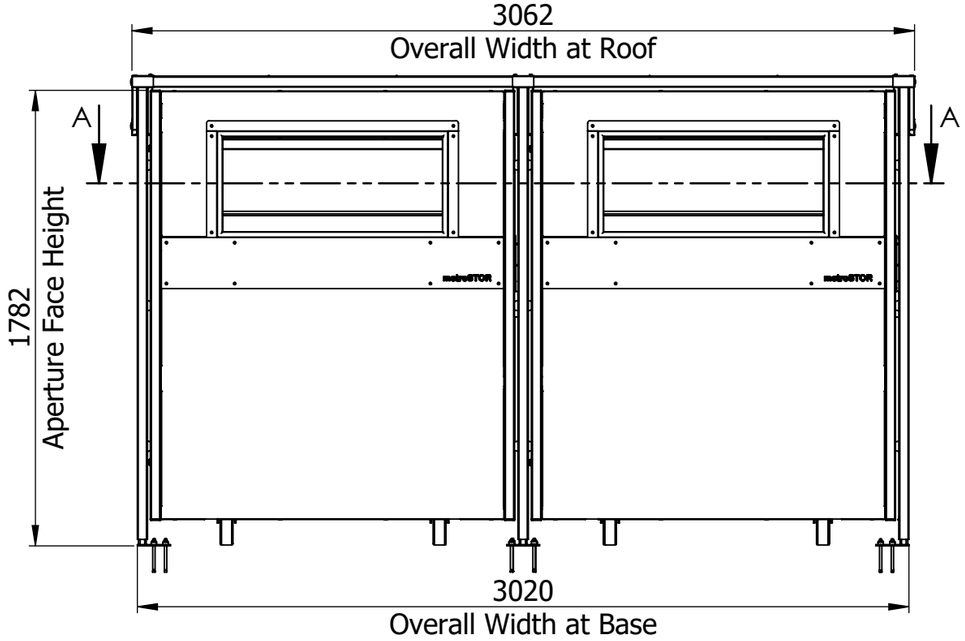

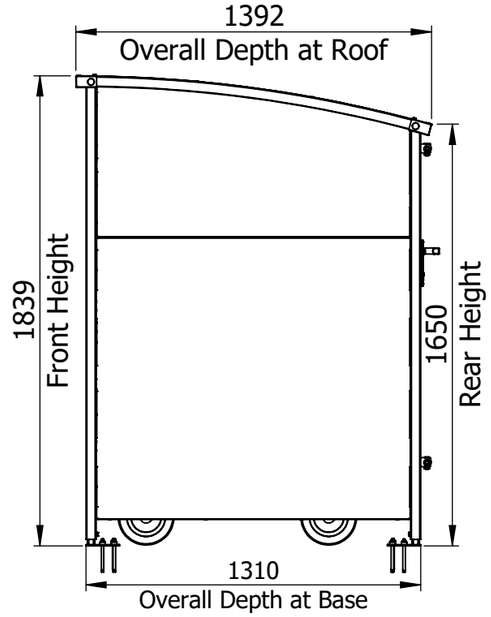

Drawing Notes:

- Cladding finish and access control type for illustration only.

Ensure the drawing is the correct issue & release before using.

metroSTOR® outdoor storage systems

This is property of Streetspace Ltd and shall not be disclosed, duplicated or used without formal consent.

Streetspace Ltd.
Lympne Industrial Park
Hythe
Kent
CT21 4LR

01227 200404
www.streetspacegroup.co.uk

Rev.	Details	Drawn by	Date	Check by	Approved by

Part No.	M03-0928	*ISO A3 Landscape*	
Description	PBM2_RHH_STL_GW_EU_REAR-LOAD	*ALL DIMENSIONS IN mm DO NOT SCALE*	
Drawn By AS	*Status*	*Revision*	*Issue*
Date 08.12.2022	TECH 2D	00	2
Approved By			
Date			

PBM2_RHH_STL_GW_EU_REAR-LOAD - FOUNDATION PADS

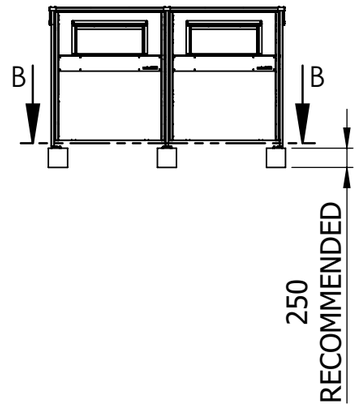

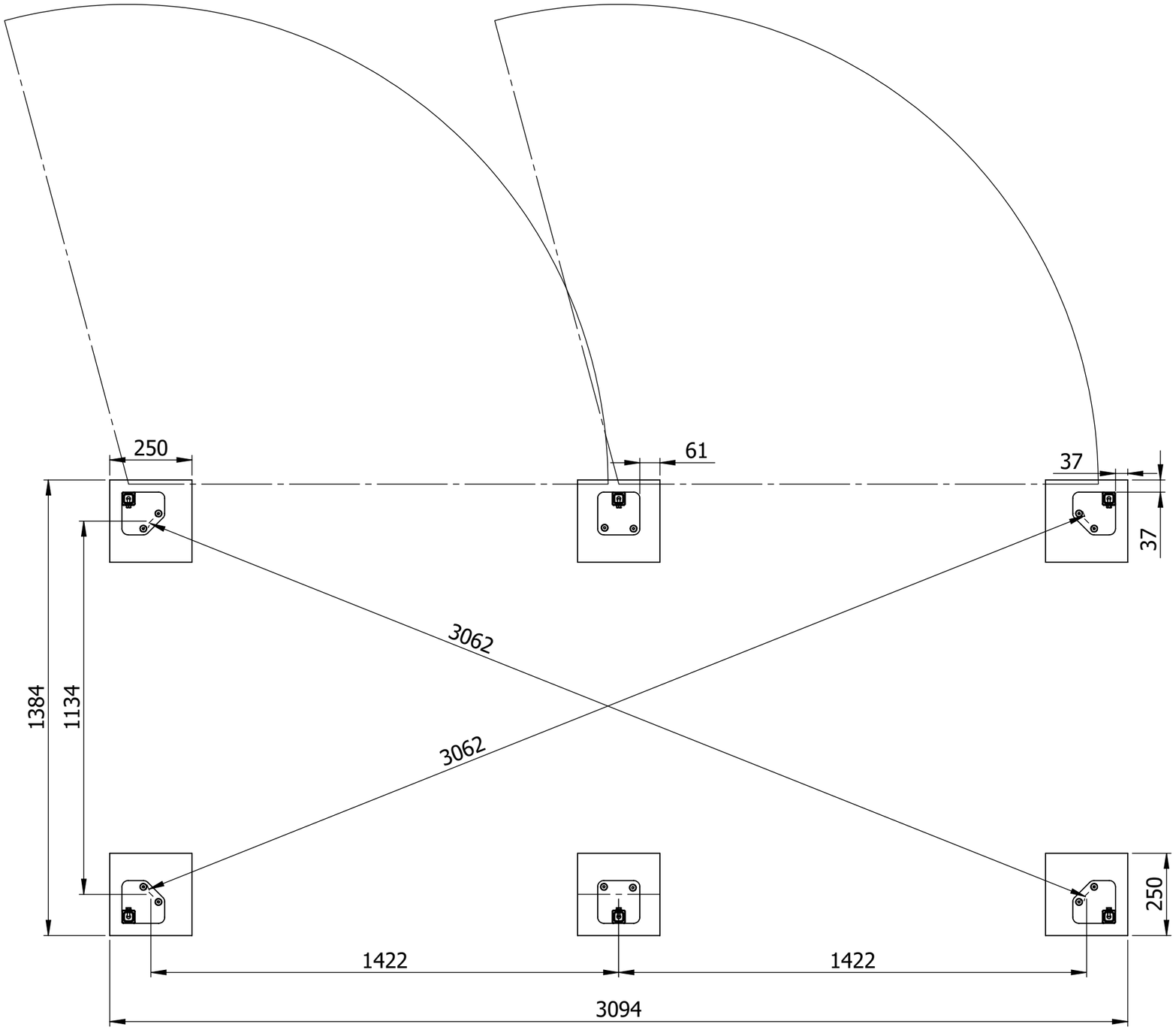

Drawing notes:

- C30/C37 Concrete Pad to be installed at a minimum 250x250x250 (depth dependant on specific ground conditions and engineers' specification.

Ensure the drawing is the correct issue & release before using.

metroSTOR® outdoor storage systems

This is property of Streetspace Ltd and shall not be disclosed, duplicated or used without formal consent.

Streetspace Ltd.
Lympne Industrial Park
Hythe
Kent
CT21 4LR

01227 200404
www.streetspacegroup.co.uk

Rev.	Details	Drawn by	Date	Check by	Approved by

Part No.	M03-0928		*ISO A3 Landscape*	
Description	PBM2_RHH_STL_GW_EU_REAR-LOAD		*ALL DIMENSIONS IN mm DO NOT SCALE*	
Drawn By AS	*Status*	*Revision*	*Issue*	
Date 08.12.2022	TECH 2D	00	2	
Approved By				
Date				

PBM2_RHH_STL_GW_EU_REAR-LOAD - FOUNDATION SLAB

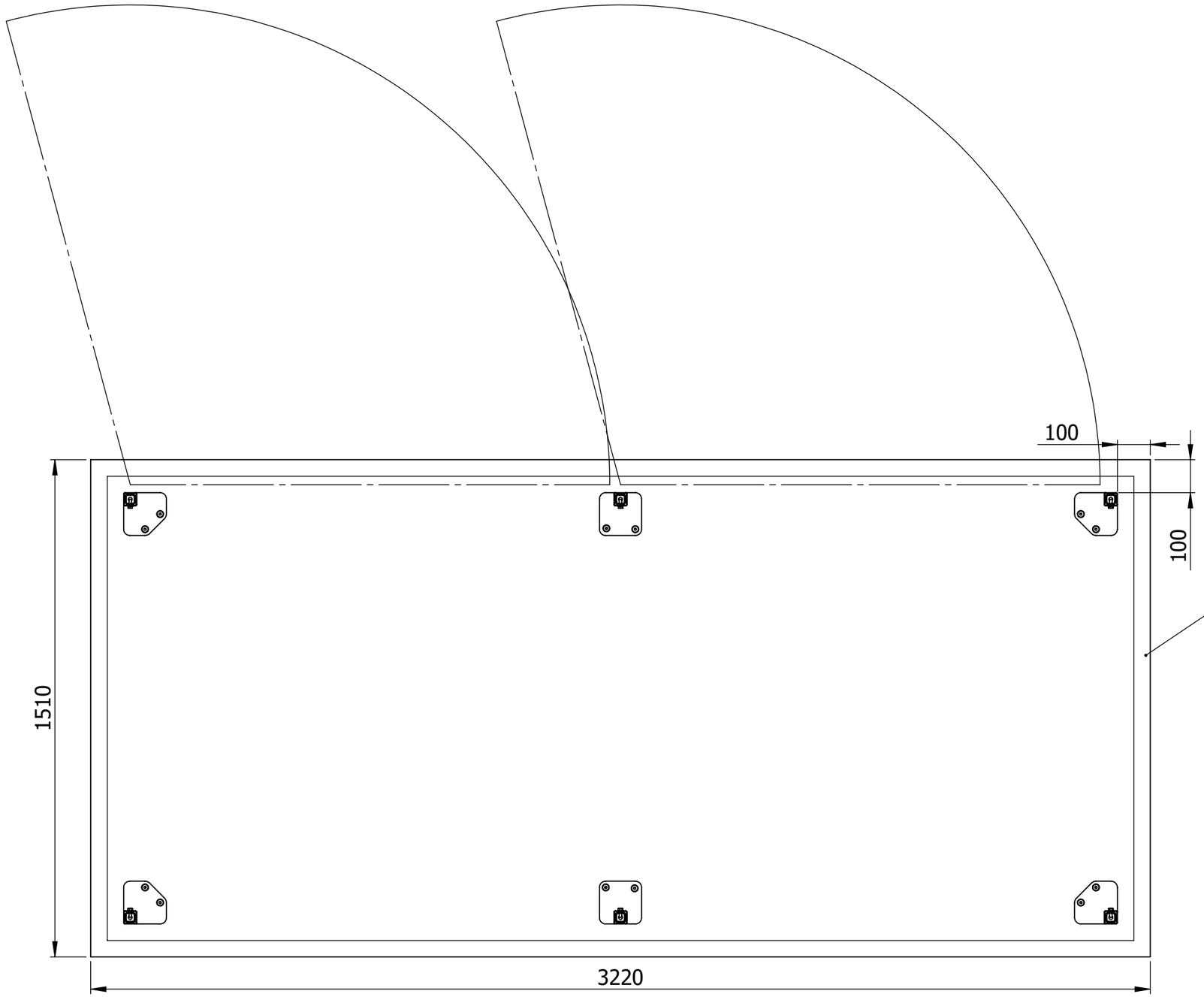

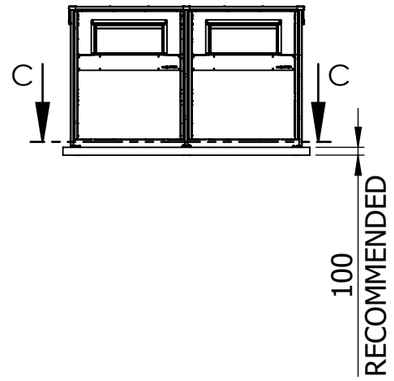

Drawing notes:

- Reinforced C30/C37 concrete slab to be installed a minimum 200mm larger than the unit dimensions across the width and depth.
- Base is to be made up of a minimum 100mm subbase type 1 or similar.
- C30/C37 concrete to be a minimum of 100mm with reinforced mesh (A142/A193) set 65mm from the top of the finished surface level.
- SR3 Surface Regularity (+/- 15mm from planned level) Plain Concrete Finish. Laid to 1:80 cross fall (across narrow dimension of slab) with appropriate drainage system to ensure water from surrounding hard surface is managed effectively.

Ensure the drawing is the correct issue & release before using.

metroSTOR® outdoor storage systems

This is property of Streetspace Ltd and shall not be disclosed, duplicated or used without formal consent.

Streetspace Ltd.
Lympne Industrial Park
Hythe
Kent
CT21 4LR

01227 200404
www.streetspacegroup.co.uk

Rev.	Details	Drawn by	Date	Check by	Approved by

Part No.	M03-0928		ISO A3 Landscape
Description	PBM2_RHH_STL_GW_EU_REAR-LOAD		ALL DIMENSIONS IN mm DO NOT SCALE
Drawn By	AS	Status	Revision / Issue
Date	08.12.2022	TECH 2D	00 / 2
Approved By			
Date			