DV5 Coltham (Reading) Limited

Bennet Court
Bennet Road
Reading

Arboricultural Method Statement

June 2024
11491 _AMS.001 Rev C

COPYRIGHT

The copyright of this document remains with Aspect Arboriculture Ltd. The contents of this Document therefore must not be copied or reproduced in whole or in part for any purpose without the written consent of Aspect Arboriculture Ltd.

Aspect Arboriculture
Hardwick Business Park
Noral Way
Banbury
Oxfordshire
OX16 2AF

t 01295 276066
f 01295 265072

e info@aspect-arbor.com
w www.aspect-arbor.com

CONTENTS

1. Introduction 1
1.1 Background 1
1.2 Scope 2
1.3 Limitations 2

2. Essential Work 2
2.1 Tree Protection Plan 2
2.2 Tree Removals 2
2.3 Pruning Works 3
2.4 Protective Barriers 4
2.5 Hard Surface Removal and Replacement 4
2.6 Supervised Excavation 4
2.7 Proposed Order of Works 6
2.8 Site Manager's Point of Contact for Arboricultural Input 7

3. Conclusions 7

APPENDICES

Tree Protection Plan Appendix A
Works Auditing Schedule Appendix B
Tree Survey Schedule Appendix C
Tree Protection Barrier Specifications Appendix D

1 INTRODUCTION

1.1 Background

1.1.1 Aspect Arboriculture are commissioned by DV5 Coltham (Reading) Limited to prepare an Arboricultural Method Statement and Tree Protection Plan (hereafter the AMS and TPP) to discharge conditions linked to the development of Bennet Court, Bennet Road, Reading.

1.1.2 Planning consent for the development has been granted under application no. 221936 subject to conditions. Pre-commencement condition 26 relates to arboriculture and sets out the requirement for the scheme to be supported by an AMS and TPP in accordance with British Standard 5837:2012 'Trees in relation to design, demolition and construction.

1.1.3 Condition 26 reads:

'No Development shall commence on site (including demolition or preparatory works) until an Arboricultural Method Statement and Tree Protection Plan in accordance with the relevant recommendations of appropriate British Standards or other recognised Codes of Good Practice for all existing trees that are not shown as being removed on the approved drawings, both within and adjacent to the site, has been submitted to and been approved in writing by the Local Planning Authority. The Development shall not be carried out other than in accordance with the approved Arboricultural Method Statement and Tree Protection Plan.

Reason: In order to ensure that appropriate protection is given to trees of amenity value within and adjacent to the site in accordance with Policy EN14 of the Reading Borough Local Plan 2019.'

1.1.4 Accordingly, this AMS and TPP have been prepared in direct response to Condition 26; they clearly identify trees which are to be removed and those which are to be retained, with appropriate protection measures, including construction mitigation and phasing of work. An auditable scheme of site supervision is also provided with details of subsequent reporting to Reading Borough Council's Arboricultural Officer.

1.1.5 It is our understanding that this work will be submitted to, and approved by, Reading Borough Council, prior to the commencement of any development works occurring on site. Once approved, the safeguarding measures and works should be implemented as specified and maintained to the Council's satisfaction until completion of the development.

1.1.6 The confident protection of retained trees will be achieved through the use of the appended TPP (appendix A) and Works Auditing Schedule (appendix B), alongside other supporting documents included within appendices C and D.

1.1.7 Background checks have confirmed that the site does not occur within a Conservation Area, and no trees within influence of the site are afforded protection by a Tree Preservation Order (Reading Borough Council, cited November 2022).[1]

[1] Ref. Arboricultural Impact Assessment document 11491_AIA.001 Rev E

1.2 Scope

1.2.1 This work relates to arboriculture therefore reliance should not be given to comments made in respect of other disciplines i.e., civil engineering or construction phasing, without first referencing an appropriate expert.

1.3 Limitations

1.3.1 This document has been prepared to inform safeguarding measures during development and should not be interpreted as a report on tree health and safety. Reasonable effort has been made to identify visible defects whilst carrying out the tree survey, however trees are prone to natural failure without warning; no guarantee can be made as to the absolute safety of any of the trees surveyed. Aspect's opinion of tree condition and structural potential is valid for twelve months from the date of survey. Validity is assumed in the absence of inclement weather and no change to the tree's existing context. A copy of the site's tree survey information is provided within appendix C.

2 ESSENTIAL WORK

2.1 Tree Protection Plan

2.1.1 The TPP provided in appendix A will be relied upon during the construction of the development. It must be read in conjunction with the entirety of this document. To prevent avoidable damage occurring to retained trees or erroneous tree loss, a scaled A1 copy of the TPP, accompanied by a copy of this document must be provided to the Site Manager. This will ensure they are able to:

- Clearly identify all retained trees;
- Identify the correct locations for tree protection barriers;
- Identify features of the site that must be prepared/installed under an arboricultural watching brief;
- Request attendance of the Project Arboriculturist on site for site monitoring and to provide advice in case of any emerging issues;
- Demonstrate compliance with the Council's consent for the development by safeguarding trees which are to be retained and enable the Project Arboriculturist to evidence this by completing the Works Auditing Schedule (appendix B).

2.2 Tree Removals

2.2.1 To implement the scheme of development it will be necessary to remove five trees of individual distinction, four groups of trees, and two ornamental hedges. The removals major on young to semi mature ornamental broadleaves which relate only to the layout of the

existing development, all are detailed within Table 1 below and illustrated within appendix A with a dashed red outline.

2.2.2 **Table 1:** Net Tree Removals by BS5837 Category.

Category A	Category B	Category C
None	None	**T11** Grey Poplar
		T14 Ash
		T15 Rowan
		T16 Elaeagnus
		T17 Cherry
		G1 Beech
		G4 Sycamore, Field Maple
		G5+
		G6 Photinia
		H1 Laurel
		H2+

+ Denotes assemblage of two or more species (refer to appendix B)

2.2.3 Trees to be removed will be spray marked with a red flash by the project arboriculturist. The presence of the appointed arboricultural contractor is also recommended during this process to safeguard against erroneous felling.

2.2.4 Felling works should be timed to avoid the main nesting season for birds between 1st March and 31st August. If scheduled within this period an ecologist must be present to advise on any necessary protective measures, and to confirm that tree works are not likely to cause disturbance to nesting birds.

2.2.5 This work will be undertaken in accordance with the principles within BS3998:2010 by a qualified and competent contractor to ensure cuts are performed correctly and positioned to avoid damage/harm to surrounding retained trees.

2.3 Pruning Works

2.3.1 To provide sufficient working room to reconfigure existing hard surface along the site's eastern perimeter it will be necessary to selectively prune the western canopy of T10 by c. 2m; and crown lift the western canopies of T7, T8, T9 and G3 to achieve a ground clearance of c. 5m. There will also be a requirement to crown lift the northeast canopy of T13 to achieve a ground clearance of c. 5m to facilitate the introduction of new hard surface.

2.3.2 To provide sufficient working room to facilitate connecting an LV cable to an existing sub-station and a foul water sewer connection to an existing manhole, it will be necessary to selectively prune the lower canopy of T6 to achieve a ground clearance of c. 2m.

2.3.3 Although not required to accommodate the development, it is also recommended that dead branches are removed from the canopies of retained trees. This will help mitigate the risk of future tree related hazards emerging and associated apprehension.

2.3.4 Pruning works will be undertaken in accordance with section 7.8 (for selective pruning), section 7.6 (for crown lifting) and section 7.3 (for removal of deadwood) of BS3998:2010, by a competent tree contractor. This is necessary to ensure that cuts are performed correctly and positioned to avoid future structural defects or physiological issues, facilitate growth and maintain aesthetic value.

2.3.5 This work should be timed to avoid the main nesting season for birds between 1st March and 31st August. If scheduled within this period an ecologist must be present to advise on any necessary protective measures, and to confirm that tree works are not likely to cause disturbance to nesting birds.

2.4 Protective Barriers

2.4.1 Tree protection barriers are required to safeguard retained trees from damage during demolition and construction works. Protective barriers must be installed before works commence as illustrated on the TPP provided at appendix A and consist of the default barrier specification provided in BS5837:2012 (see appendix D). The location for protective barriers has been informed by retained trees' canopy extents and root protection areas (RPA). Protective barriers are shown within appendix A with a dark blue line.

2.4.2 Where hard surface alterations occur within RPAs, protective barriers will need to be temporarily removed, however they must be reinstated upon completion of hard surface removal. This will ensure that exposed (unsurfaced) areas of retained trees' RPAs are protected until new surfaces are installed.

2.4.3 The Site Manager will be responsible for arranging attendance of the Project Arboriculturist, for the purpose of setting out barriers and for their monitoring at appropriate intervals for the duration of the development; issues will be resolved on site and reported to the Council's Arboricultural Officer by the Project Arboriculturist.

2.5 Hard Surface Removal and Replacement

2.5.1 It will be necessary to reconfigure the existing hard surfacing within the RPAs of T7, T8, T9 and T10 to provide the development's vehicular access. The existing wearing course must be lifted and removed sensitively under direct arboricultural supervision. The wearing course should be broken out manually and lifted carefully by a lightweight machine (less than 5 tonnes) operating outside of the tree's RPA or from the footprint of existing hard surfaces. The existing sub-base will be left undisturbed and in-situ, then capped with the replacement surface. This approach will minimise ground disturbance and the potential for harm to occur should the sub-base be occupied by tree roots; it is illustrated with a red wash within the TPP (appendix A).

2.6 Supervised Excavation

2.6.1 **Foul Water Connection:** To connect the scheme's foul water to an existing manhole and wider Thames Water infrastructure, it will be necessary to undertake excavation within the RPA of

T6. This is considered the most appropriate location for the foul connection and will limit the degree of disturbance within retained tree's RPAs.

2.6.2 **Hard Surface Installation:** There will also be a requirement for minor excavation within the RPA of T13 to introduce new hard surfacing. In addition, the site is to be secured by a new paladin security fence, comprised of 2.4m weld mesh panels and supporting posts every 2.75m. Where posts are sited adjacent to retained trees, it will be important that post holes excavated manually and are adjusted to accommodate large diameter roots (i.e. roots larger than 25mm in diameter); they must also be lined with an impermeable membrane to prevent concrete leachate.

2.6.3 **Service Installation:** It will be necessary to undertake further excavation within the RPAs of T6 and T13 to introduce ducts and a new LV cable connection to an existing sub-station. Regarding the latter, excavation work effects an existing services corridor which has received numerous phases of disturbance. It is therefore anticipated that large diameter roots will be absent and that works will major their effect on regenerative small diameter roots which will be acceptable to prune in accordance BS5837:2012 clause 7.2.3. In other instances where it is necessary to install ducting, the most appropriate routes which limit the degree of disturbance within the RPAs have been adopted.

2.6.4 It is important that the first 600m depth excavation within retained trees' RPAS is undertaken sensitively under direct arboricultural supervision following the procedure set out below. With the exception of fence posts, the extent of excavation to be carried out under supervision is illustrated within appendix A with an orange wash.

2.6.5 During supervised excavation works within the RPAs of retained trees, the following procedure will be adopted:

i. The breaking up and clearance of the existing soils must be undertaken under arboricultural supervision, using a low impact method of excavation, utilising hand tools, an air-spade, or a vacuum excavator.

ii. If necessary, roots that are less than 25mm diameter will be pruned back, preferably to a side branch, using sharp cutting tools in accordance with best practice i.e., using secateurs or pruning saw.

iii. During the works the protective bark of larger roots is not to be damaged, until the Project Arboriculturist has judged whether they can be retained or not.

iv. No roots over 25mm will be pruned without approval of the appointed Project Arboriculturist as they may be integral to tree health and stability. If it becomes necessary to prune roots over 25mm diameter to accommodate site features, the Project Arboriculturist will provide the Developer and the Council's Arboricultural Officer with appropriate recommendations for remedial action/management.

v. Any exposed roots which can be retained will be covered in hessian or clean topsoil to protect from dehydration and temperature flux. Hessian is to be removed prior to backfilling.

vi. Areas adjacent to roots that are to be filled with concrete will be lined with an impermeable membrane to prevent concrete leachate coming into contact with tree roots.

vii. Any use of an excavator to complete excavations will occur from outside the trees' RPA (which will be spray-marked on the ground in advance of the works taking place). A toothless bucket will be utilised at all times.

viii. A record of exposed roots will be made and accompanied by a photographic log.

ix. Should any issues be raised during the works then the Project Arboriculturist will inform the Developer and the Council's Arboricultural Officer, indicating the nature of the problem and recommendations for remedial action (if required).

x. Upon request, written confirmation of the works being undertaken to a satisfactory standard can be provided to the Developer and the Council's Arboricultural Officer by the Project Arboriculturist.

2.7 Proposed Order of Works

i. Site meeting to be held between the Project Arboriculturist, Site Manager and the Council's Arboricultural Officer. Stages of arboricultural auditing/monitoring requirements will be identified/agreed.

ii. Necessary tree removals to be carried out prior to installation of tree protection barriers and commencement of development works in the vicinity.

iii. Tree protection barriers are to be installed following removals and prior to construction works commencing in the vicinity. Upon request, barrier positions can be set out by the Project Arboriculturist, as detailed within this document.

iv. The Council's Arboricultural Officer shall be informed of the proposed commencement date as soon as possible, to allow the inspection of protection measures.

v. The Site Manager will assume responsibility for arranging the attendance of the Project Arboriculturist to oversee, relocation of barriers and for the supervision of works within retained trees' RPAs, as detailed within the Works Auditing Schedule (appendix B).

vi. The Site Manager will also assume responsibility for arranging attendance of the Project Arboriculturist for the monitoring of barriers at appropriate intervals for the

duration of the development works. Erection of barriers and monitoring is included within the Works Auditing Schedule (appendix B).

2.8 **Site Manager's Point of Contact for Arboricultural Input:**

A. Justin Hodges (Aspect Arboriculture)
Arboricultural Consultant
Telephone: 01295 585600
Email: justin.Hodges@aspect-arbor.com

B. Patrick Haythornthwaite (Aspect Arboriculture)
Principal Arboricultural Consultant
Telephone: 01295 585600
Email: patrick.haythornthwaite@aspect-arbor.com

3 CONCLUSIONS

3.1 This document has been prepared in response to condition 26 of planning application no. 221936. The document has been informed by guidance provided in BS5837:2012 including details of the site's existing trees (surveyed during September 2022).

3.2 Pursuant to the instruction, this document, and its supporting work (appendices A - D) identifies all aspects of the development that must be managed to facilitate the confident protection of retained trees during construction.

3.3 To ensure confident tree retention, siting of tree protection barriers and the specified construction works must be audited by the Project Arboriculturist; the outcome of these works will be reported to the Council's Arboricultural Officer on completion. These elements are specified within the Works Auditing Schedule (appendix B).

3.4 It is Aspect's opinion that, subject to strict adherence to this document, the development can be implemented without incurring harm to retained trees.

APPENDICES

APPENDIX A

TREE PROTECTION PLAN - 11491 TPP 01 Rev H

Default Barrier Specification, cited BS 5837:2012

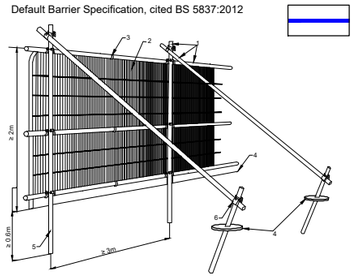

Key
1 Standard scaffold poles
2 Heavy gauge 2m tall galvanized tube and welded mesh infill panels
3 Panels secured to uprights and cross-members with wire ties
4 Ground level
5 Uprights driven into the ground until secure (minimum depth 0.6m)
6 Standard scaffold clamps

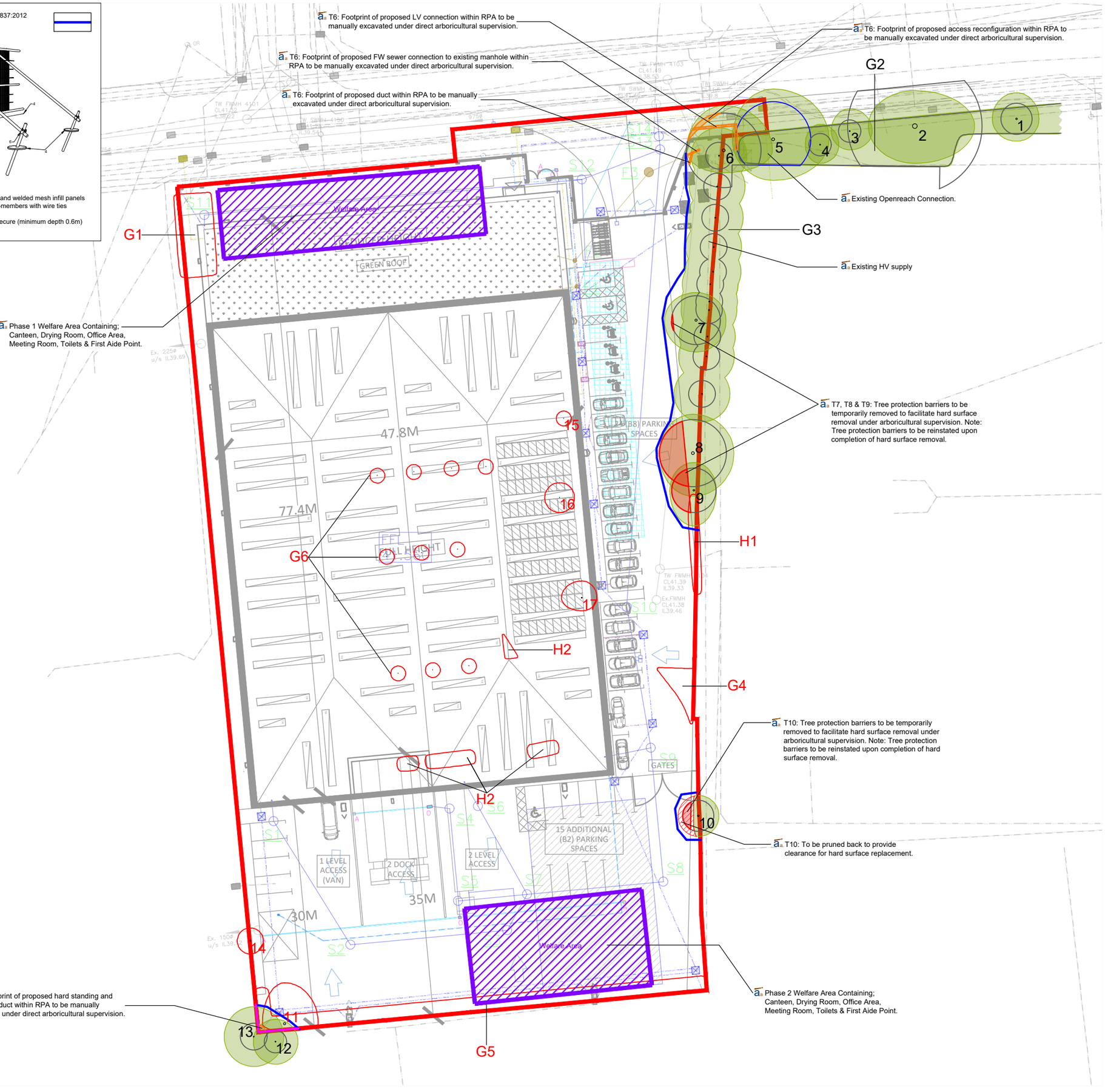

1:500 @ A3

0m 5m 10m 20m

KEY:

- Site Boundary
- Tree Numbers
- Tree Canopies
- Category 'B' RPA
- Category 'C' RPA
- Trees to be Removed
- Pruning Works
- Tree Protection Barrier
- Supervised Excavation
- Hard Surface Replacement
- Welfare Area

Note: The RPA footprint for Trees 2, 5 and 6 have been displaced to allow for the effect of the adopted highway and existing building foundations. The surface area of the RPA has not been reduced.

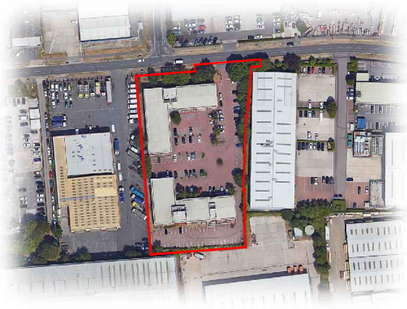

Cited from Google Earth

H	19.06.24	Updated services layout	GW
G	16.05.24	Add services layout	GW
E	10.01.24	Revised layout	JH
D	10.07.23	Revised layout	TR
C	23.12.22	Updated site boundary	TR
B	21.12.22	Revised layout	TR
A	07.12.22	Revised layout	TR

REVISIONS

aspect arboriculture

TITLE
Bennet Court, Bennet Road, Reading
Tree Protection Plan

CLIENT
DV5 Coltham (Reading) Ltd

SCALE	DATE	DRAWN
1:500 @ A3	JUL 2024	JH/GW

DRAWING NUMBER	REVISION
11491 TPP 01 Rev H	H

Based on: 22-024-PL-03K SITE PLAN - AS PROPOSED (OS BASED).dwg
2022-124 100T2 Drainage Layout.dwg
1870-ESC-00-ZZ-DR-Z-1000s.dwg

APPENDIX B

WORKS AUDITING SCHEDULE

Works Auditing Schedule

Works Requiring Auditing	Tree No.	Date Undertaken	Date Reported to LPA
1: Pre-commencement meeting identifying tree removals, tree protection barrier locations and safeguarding measures, as specified within 11491_AMS.001 Rev C and illustrated on drawing no. 11491_TPP.01 Rev H Tree Protection plan.	As drawn		
2: Inspection of tree protection barriers prior to commencement of development works by Project Arboriculturist.	As drawn		
3: Hard surface removal and replacement.	T7 T8 T9 T10		
4: Supervised Excavation	T6 T13		
5: Inspection of installed tree protection barriers as specified within 11491_AMS.001 Rev C and illustrated on drawing no. 11491_TPP.01 Rev H Tree Protection plan, on an appropriate basis.	As drawn		

This schedule will be completed as evidence that works have been undertaken as per the approved methodology.

APPENDIX C

TREE SURVEY SCHEDULE - 11491 TS 01 Rev A

aspect arboriculture

BS 5837:2012 Tree Schedule: Bennet Court, Bennet Road, Reading

11491 TS 01 Rev A

aspect arboriculture

BS5837:2012 Tree Survey: Explanation of Survey Criteria

*Area around tree deemed to contain sufficient roots and rooting volume to maintain the tree's viability, and where the protection of roots and soil structure is a priority. *The RPA has been manipulated to allow for various site features, i.e. roads, structures or changes in levels. Please refer to the Tree Constraints Plan for these changes.*

e.g.: young, semi-mature, early-mature, mature or over-mature

Sequential reference number cited on all aspect drawing.

Category prefix A-C denotes arboricultural quality, decreasing from A (high) to C (low); Subcategories 1, 2 and 3 highlight associated arboricultural (1), landscape (2) and ecological (3) qualities.

Height and Crown spread measured to the nearest half meter; # denotes where this is estimated.

Category U trees are those in such a condition that they cannot be realistically retained as living trees in the current context for the long term.

Tree Number	Common Species Name	Trunk Diameter (mm)	Height (m)	Crown Spread (m)					Crown Clearance (m)	Life Stage	Physiological Condition	Structural Condition	Comments	BS5837 Category	RPA Radius (m)
				N	E	S	W	radial							

Measured to the nearest 10mm; # denotes estimated diameter where access is not possible.

e.g.: above-average, average, below average or dead

General observations, i.e. defects, preliminary management recommendation, presence of pests/disease, perceived significance.

Height of first significant branch and/or canopy

e.g.: good, indifferent, poor, or hazardous

Colour band key:

Category A
Category B
Category C
Category U

The following survey should not be interpreted as a report on tree health and safety. Aspect's opinion of tree condition and structural potential is valid for a limited period of 12 months from the date of inspection. Validity is assumed in the absence of inclement weather and no change to the trees existing setting.

Tree Number	Common Species Name	Trunk Diameter (mm)	Height (m)	Crown Spread (m) N	E	S	W	Radial	First Significant Branch (m)	Crown Clearance (m)	Life Stage	Physiological Condition	Structural Condition	Comments	BS5837 Category	RPA Radius (m)
1	Chinese Ash	180#	6.5	3.5	3	3#	3.25		1.75	1.75	Semi Mature	Average	Indifferent	Situated offsite within roadside verge Stem inaccessible due to dense understory Establishing ornamental planting Low arboricultural value, readily replaceable at current size	C12	2.1
2	Purple Plum	320 2*270 3*250 #	7.5	4.75	8	5#	6.25		1.5	1.5	Mature	Below Average	Poor	Situated offsite within roadside verge Stems inaccessible due to dense understory Partially clad and obscured by Ivy, unable to thoroughly inspect Multi stemmed from ground level Multiple *Phellinus pomaceus* fruiting bodies on western stem Epicormic growth establishing throughout scaffold structure Above average internal deadwood Unremarkable example of species	C1	7.8*
3	Chinese Ash	120	7	3	3	2.5#	2.5		1.75	1.5	Semi Mature	Average	Indifferent	Situated offsite within roadside verge Establishing ornamental planting Low arboricultural value, readily replaceable	C12	1.5
4	Rowan	120	7	2.75	2.5	2.5#	2		1.75	1.5	Semi Mature	Average	Indifferent	Situated offsite within roadside verge Establishing ornamental planting Low arboricultural value, readily replaceable	C12	1.5
5	Norway Maple	405	13	6.75	7.5	5.5#	5.5		1.75	1.25	Early Mature	Average	Indifferent	Situated offsite within roadside verge Exposed root network to north of stem Average internal deadwood Contributes to screen of adjacent built form Prominent within views from adjacent road Moderate example of species	B12	4.8*
6	Cherry Plum	230 160 2*210	8.5	6	6.5	3	5		0.5	1.5	Early Mature	Below Average	Poor	Situated offsite within roadside verge Multi stemmed from ground level Stems growing through chain-link fence Tight and crossing stems Epicormic growth establishing throughout scaffold structure Above average small diameter internal deadwood Suppressed by companion shelter Unremarkable example of species	C1	4.8*
7	Sycamore	280 oi	12	3.75	4#	4.25	4.25		1.75	2	Semi Mature	Average	Indifferent	Clad and obscured by Ivy, unable to thoroughly inspect Recent limb removals from lower west canopy Contributes to screen of built form to the east Unremarkable example of species	C1	3.3

Tree Number	Common Species Name	Trunk Diameter (mm)	Height (m)	Crown Spread (m)					First Significant Branch (m)	Crown Clearance (m)	Life Stage	Physiological Condition	Structural Condition	Comments	BS5837 Category	RPA Radius (m)
				N	E	S	W	Radial								
8	Sycamore	380 oi	11	5.25	5.5#	5.75	4.5		2.75	3	Early Mature	Average	Indifferent	Clad and obscured by Ivy, unable to thoroughly inspect Recent limb removals from lower west canopy Contributes to screen of built form to the east Unremarkable example of species	C1	4.5
9	Silver Birch	250 oi	12	3.75	3#	4.75	3.25		4.5	3.5	Semi Mature	Average	Indifferent	Clad and obscured by Ivy, unable to thoroughly inspect Contributes to screen of built form to the east Unremarkable example of species	C1	3
10	Hazel	4*75 3*60 #	7					2.75	0.5	0.5	Semi Mature	Average	Poor	Situated to east of boundary fence within neighbouring third party land Multiple stems growing through chain link fence Previously reduced to c. 3m Low arboricultural value, readily replaceable at current size	C12	2.1
11	Grey Poplar	275#	8	5.5	4.5	1#	3#		3.75#	1.75	Semi Mature	Below Average	Poor	Restricted access due to dense understory and storage container Clad and obscured by Ivy, unable to thoroughly inspect Leans heavily to north east Above average internal deadwood Low arboricultural quality	C1	3.3
12	Red Oak	120#	9.5					3	5#	4#	Semi Mature	Average	Indifferent	Inaccessible, offsite within neighbouring third party land, unable to thoroughly inspect Clad and obscured by Ivy Radial crown measurement based on northern spread due to restricted access Low arboricultural value, readily replaceable at current size	C12	1.5
13	Red Oak	150#	12					4	3#	3#	Semi Mature	Average	Indifferent	Inaccessible, offsite within neighbouring third party land, unable to thoroughly inspect Clad and obscured by Ivy Radial crown measurement based on northern spread due to restricted access Low arboricultural value, readily replaceable at current size	C12	1.8
14	Ash	75 40	5					1.75	1	1	Young	Average	Poor	Self set specimen Growing through palisade fencing Low arboricultural quality	C12	0.9
15	Rowan	50	3.5					1	1.75	1.75	Young	Average	Indifferent	Establishing ornamental planting Low arboricultural value, readily replaceable at current size	C12	0.9

Tree Number	Common Species Name	Trunk Diameter (mm)	Height (m)	Crown Spread (m) N	E	S	W	Radial	First Significant Branch (m)	Crown Clearance (m)	Life Stage	Physiological Condition	Structural Condition	Comments	BS5837 Category	RPA Radius (m)
16	Elaeagnus	3*40 3*25 #	2.5					2	0.5	0.5	Semi Mature	Average	Indifferent	Establishing ornamental planting Low arboricultural value, readily replaceable at current size	C12	0.9
17	Cherry	155 oi	4	2.25	2	1.75	2.75		2.25	1.5	Semi Mature	Below Average	Indifferent	Clad and obscured by Ivy, unable to thoroughly inspect Dieback to upper canopy Establishing ornamental planting Low arboricultural value, readily replaceable at current size	C12	1.8
G1	Beech	250# av	9 av					3.75 av	0.5 av	0.5 av	Semi Mature to Early Mature	Average	Indifferent	Short cohesive linear planted group Stems inaccessible due to dense lower canopies Provides minimal screening benefits Unremarkable collection	C12	3
G2	Hazel Privet Snowberry Laurel Choisya Variegated Dogwood Purple Plum Field Maple Cherry Plum Norway Maple Rowan	75 av	1 to 5					1 av	0.5 av	0.5 av	Semi Mature	Average	Indifferent	Collection of maintained ornamental plantings Provides understorey for T2 to T7 Low arboricultural value, readily replaceable at current size	C12	0.9
G3	Beech Sycamore Norway Maple	150 av	13 av					3.75 av	1.5 to 4	1.5 to 4	Semi Mature	Average	Poor	Cohesive linear group situated to east of boundary fence within neighbouring third party land Etiolated form Provides screen of adjacent built form Unremarkable collection	C12	1.8
G4	Sycamore Field Maple	75# max	2.5 max					1 av	0.5 av	0.5 av	Young	Average	Indifferent	Small parcel of self set specimens and regrowth from previously felled stumps Low arboricultural quality	C12	0.9
G5	Cotoneaster Sycamore Grey Poplar	75# max	1 to 2					1 av	0.5 av	0.5 av	Young to Semi Mature	Below Average to Average	Indifferent	Parcel of unmaintained ornamental plantings and occasional self set specimens Clad and obscured by Ivy, unable to thoroughly inspect Low arboricultural value, readily replaceable at current size	C12	0.9
G6	Photinia	50 av	2 max					1 max	1 av	1 av	Young	Average	Indifferent	Collection of establishing ornamental car park plantings Low arboricultural value, readily replaceable at current size	C12	0.9
H1	Laurel	75# max	1.5 av					1 av	0.25 av	0.25 av	Semi Mature	Average	Indifferent	Short length of maintained ornamental planted hedgerow	C12	0.9
H2	Elaeagnus Cherry Laurel Field Maple	75# max	1.5 to 2.5					1 av	0.25 av	0.25 av	Semi Mature	Average	Indifferent	Multiple parcels of maintained car park hedgerow	C12	0.9

APPENDIX D

TREE PROTECTION BARRIER SPECIFICATIONS

Recommended Tree Protection Fencing Specification for this Development

(Source: BS 5837: 2012)

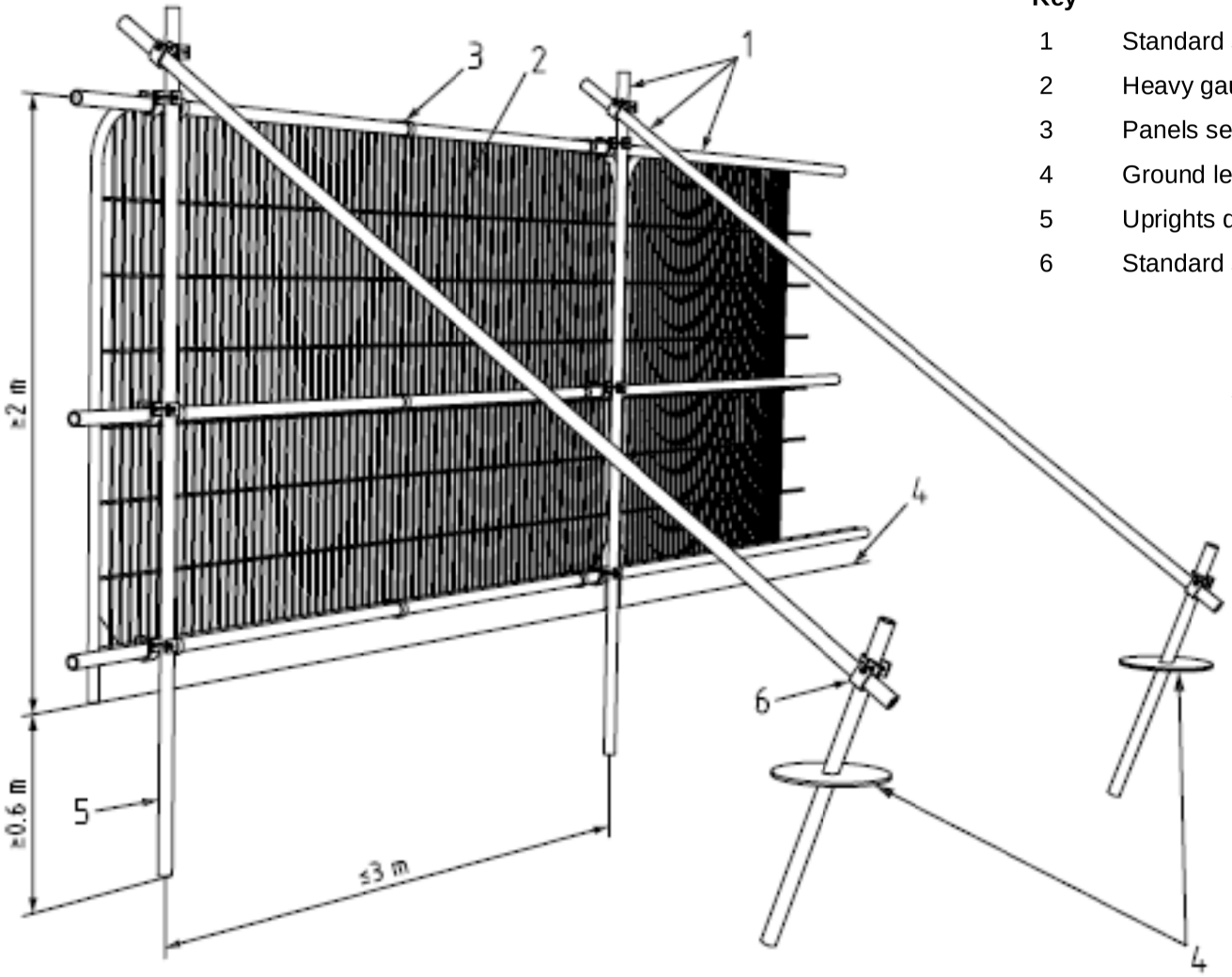

Key

1	Standard scaffold poles
2	Heavy gauge 2m tall galvanized tube and welded mesh infill panels
3	Panels secured to uprights and cross-members with wire ties
4	Ground level
5	Uprights driven into the ground until secure (minimum depth 0.6m)
6	Standard scaffold clamps

Notes:

- *Supports are to be sited tree side of the panel front face.*
- *All weather notices should be attached to every fourth panel highlighting the importance of the barrier in its correct position. An example is provided overleaf which may be duplicated for use on this development.*

aspect arboriculture

TREE PROTECTION BARRIER

- **DO NOT MOVE THIS FENCE**
- **NO SITE ACTIVITY TREE SIDE OF FENCE**
- **NO STORAGE TREE SIDE OF FENCE**

- **For assistance call Aspect Arboriculture: 01295 276066**

aspect arboriculture

landscape planning • ecology • arboriculture

aspect

Aspect Arboriculture
West Court
Hardwick Business Park
Noral Way
Banbury
Oxfordshire OX16 2AF

T: 01295 276066
F: 01295 265072
E: info@aspect-arbor.com
W: www.aspect-arbor.com