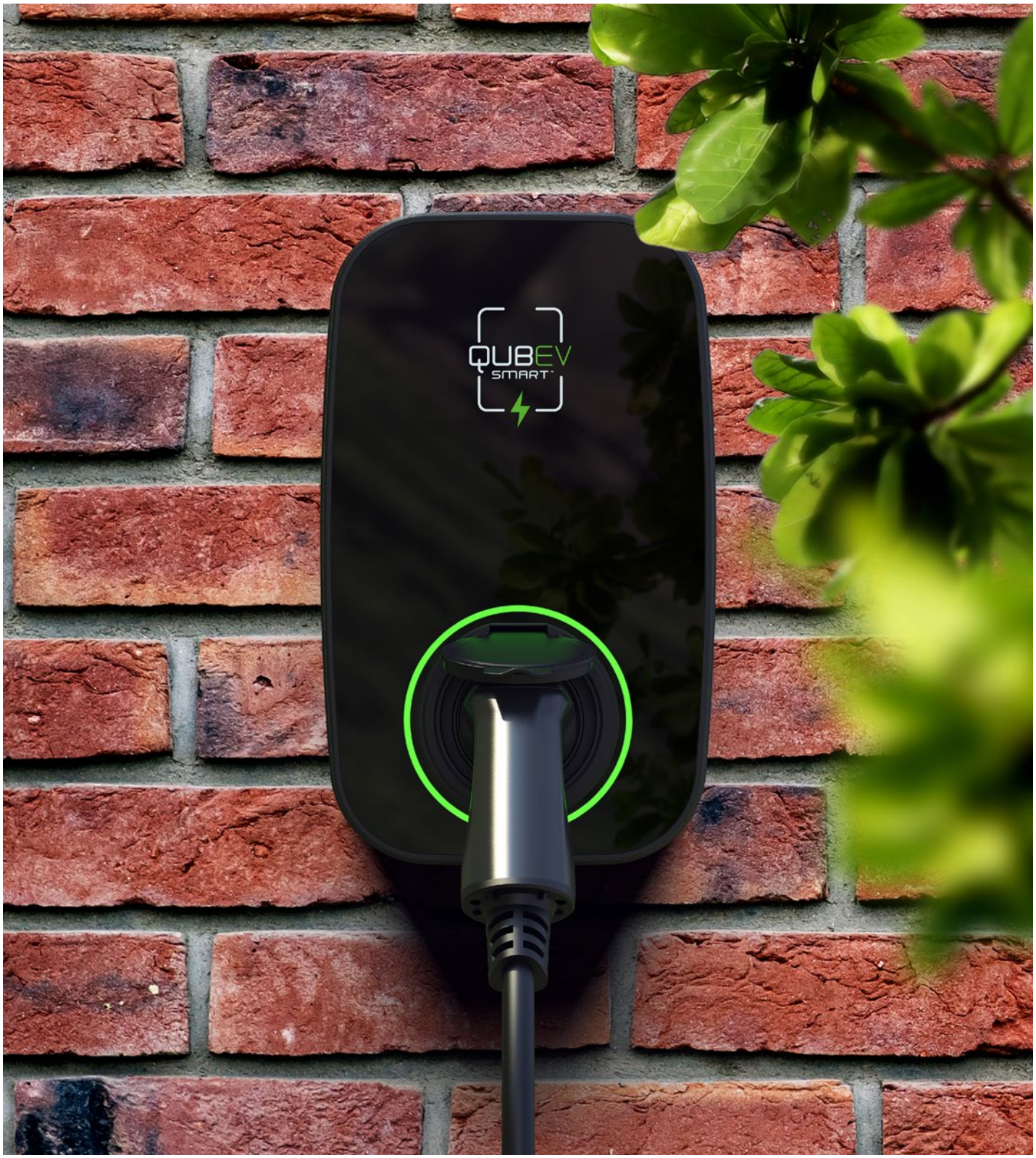

ROLECEV | QUBEV

QUBEV SMART

Intelligent EV charging unit

QUBEV SMART

The UK's most affordable intelligent EV charger

The QUBEV Smart charging range offers affordable EV charging points which are packed with the latest features, making them the ideal solution for your home.

With models providing up to 7.4kW or 22kW, these intelligent, modern yet low-cost units have been designed to provide electric vehicle drivers with an affordable charging solution, without compromising on quality. Compatible not only with all EVs and PHEVs on the market, but also with Solar power.

The QUBEV Smart app gives you full control of your charger. From scheduling your charging session for when your electricity is cheapest, adjusting the power rating, monitoring your energy usage and much more.

EV drivers can enjoy a seamless charging experience, ensuring their EV will be ready for their next electrified adventure.

The most cost-effective and reliable solution for housing developers

Product features

- Universal charging socket or Type 2 tethered lead
- Power rating – Up to 7.4kW or 22kW models
- Adjustable power rating – 10A, 13A, 16A & 32A
- Free QUBEV Smart Wi-Fi app
- Scheduled / off-peak charging
- Solar compatible (single phase models only)
- PEN fault and residual current protection (AC 30mA Type A, DC 6mA)
- Dynamic load balancing (CT clamp(s) & cable(s) included)
- OCPP 1.6 compliant
- Built-in LED charging status indicator
- UK Smart Charge Point Regulations Compliant including tamper security
- Wi-Fi / Ethernet connectivity
- IP54 & IK08 rated
- Corrosion and fire resistant
- CE and UKCA certified
- Easy to install and maintain
- Wall or post mounting options
- OZEV grant fundable

Easy-to-use Wi-Fi app

Enjoy a seamless charging experience, ensuring EV drivers will be ready for their next adventure.

No earth rod required

Equipped with built-in PEN fault detection, saving on installation time and costs.

Office for Zero Emission Vehicles

Eligible for grant funding

The QUBEV Smart range is approved for the OZEV EV Chargepoint Grant.

Wi-Fi / Ethernet enabled

Complete with secure Wi-Fi and Ethernet connectivity, ensuring chargers are always online 24/7.

EV regulations compliant

Safe, secure and fully UK Smart Charge Point Regulations compliant including tamper security

Adjustable power rating

The Power rating can be adjusted between 10A, 13A, 16A & 32A using the internal Amp selector.

The details

ADJUSTABLE POWER

Choose from 7.4kW single-phase or 22kW three-phase models which by default are set to 32A – however, if a lower power setting is required, the power rating can be adjusted between 10A, 13A, 16A & 32A using the internal Amp selector.

SLEEK & COMPLIANT

Offering a modern and discreet home electric vehicle charging solution, that's compatible with all EVs and PHEVs on the market, provided that you have the corresponding cable to plug in.

The QUBEV Smart is also tested to meet UKCA & CE standards.

SAFE AND SECURE

The QUBEV Smart range are packed with the latest safety features and fully comply with the latest UK Smart Charge Points Regulations including security logs and alerts.

STRONG & DURABLE

The IP65 weatherproof rated enclosure is made from durable ABS and Polycarbonate ensuring it can withstand the harshest of weather conditions for years to come.

3 YEAR WARRANTY

The QUBEV Smart electric vehicle charging units come with a 3 year warranty and UK support included as standard, for added peace of mind on your investment.

Specifications

Product Overview:

	Connection Type	AC Charging Output(s)	Input Supply(s)	Unit Colour	Product Code
Single Phase Units	Type 2 (IEC 62196) charging socket	Up to 7.4kW (32A)	32A Single Phase 230V AC (±10 %) 50/60Hz	Black	EVON0090
	Type 2 (IEC 62196) 5m tethered lead*	Up to 7.4kW (32A)	32A Single Phase 230V AC (±10 %) 50/60Hz	Black	EVON0095
Three Phase Units	Type 2 (IEC 62196) charging socket	Up to 22kW (32A)	32A Three Phase 400V AC (±10 %) 50/60Hz	Black	EVON0100
	Type 2 (IEC 62196) 5m tethered lead*	Up to 22kW (32A)	32A Three Phase 400V AC (±10 %) 50/60Hz	Black	EVON0105

*Tethered cables are approximately 5m total length

QUBEV Smart unit:

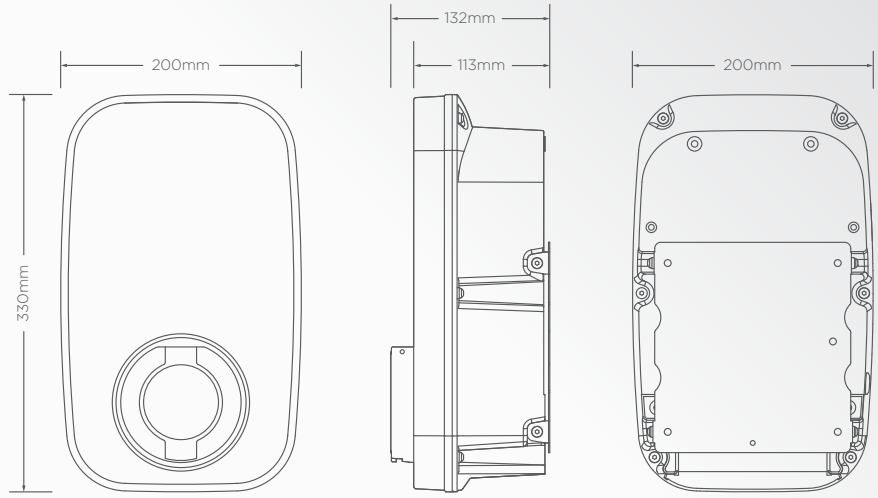

Type 2 charge plug holster:

Included with tethered units

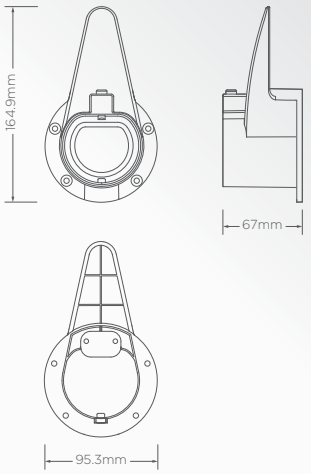

Specifications

Technical Data:

User Interface	• Mobile app • Plug & charge (manual) Scheduled ECO mode (solar) • Push button (limited functions) • RGB LED status indicator halo
Charge Protocol	Mode 3 (IEC 61851-1)
Charging Current	Variable – 10A, 13A, 16A & 32A
Protection	• Over current protection – A Type A RCBO installed at source is recommended • Residual current protection – AC 30mA Type A & DC 6mA • Over temperature protection • PEN fault detection – No earth electrode/rod required
Cable Terminals	• 3 x 10mm² terminals (1-Phase) • 5 x 10mm² terminals (3-Phase)
Communications	• Wi-Fi 802.11 b/g/n 2.4 GHz • RJ45 Ethernet connection • Bluetooth (for installer configuration purposes) • OCPP 1.6J
Standby Power Consumption	< 10W
Enclosure Dimensions	200mm x 330mm x 109mm (W x H x D)
Weight	< 2.8kg (Socket) < 6kg (Tethered)
Environmental	• Ingress protection – Enclosure IP65, plug & socket IP54 • Impact protection – IK08 • Security – Tamper and breach protection boundaries with notifications • Operating temperature – -25°C to +50°C • Operating humidity – 3% to 95% • Altitude – < 2000m
Materials	• Unit – PC/ABS Alloy, flammability rating UL94-V0 • Mounting back plate – 1.5mm Steel with black powder coated finish
Unit Colour	● Black
Certifications & Compliances	• EV Charging Compliance – EN IEC 61851-1:2019, BS EN IEC 61851-1:2019 • Smart Regulations – SI 2021:1467 inc Schedule 1. • EMC Compliance – 2014/30/EU, SI 2016:1091. ETSI EN 301 489-1 V2.2.3 (2019-11) ETSI EN 301 489-3 V2.1.1 (2019-03), ETSI EN 301 489-17 V3.2.4 (2020-09). IEC 61851-21-1:2019. EN IEC 61851-21-2:2021, EN IEC 62311:2020 • Radio Emissions – 2014/53/EU, SI 2021:1467.ETSI EN 300 328 V2.2.2, ETSI EN 300 330 V2.1.1. ETSI EN 301 489-1 V2.2.3, ETSI EN 301 489-3 V2.1.1. ETSI EN 301 489-17 V3.2.4, EN IEC 61851-21-2:2021. EN IEC 61851-1:2019, EN IEC 62311:2020. BS EN IEC 61851-21-2:2021, BS EN IEC 62311:2020. EN IEC 61851-1:2019, EN IEC 62311:2020, BS EN IEC 61851-21-2:2021, BS EN IEC 62311:2020 • Safety Compliance – EN 60950-1:2006+A2:2013, EN 60950-22:2017. IEC 62955:2018. • Low Voltage Directive (LVD) – 2014/35/EU, SI 2016:1101. • Certification Markings – CE, UKCA & WEEE
Warranty	3 years

QUBEV Smart App

The QUBEV Smart app gives you full control of your charger, from scheduling your charging session for when electricity is cheapest, adjusting the power rating, monitoring your energy usage and much more.

Enjoy a seamless charging experience, ensuring your EV will be ready for your next electrified adventure.

- **Choose from charging modes:** Plug & charge, ECO (solar), scheduled
- **View charging state**
- **Solar compatible**
- **Schedule charging**
- **Multi user access**
- **Monitor usage**
- **Full charging history**
- **Fault notifications**
- **Security log & alerts**

DOWNLOAD THE FREE QUBEV SMART APP

GET IT ON Google Play

Download on the App Store

Options & accessories

Product Code	Item Description
EVFP0030	Zura/WallPod/QUBEV Smart mounting post | Fits up to 2 Chargers
EVFP0050	QUBEV Smart plate for mounting post
ACSR0380	120A up to 35mm² CT clamp with 5m cable
EVPP0100	5m 32A Type 2 to Type 2 charging cable
EVPP0107	10m 32A Type 2 to Type 2 charging cable
EVPP0105	5m 32A 3 phase Type 2 to Type 2 superfast charging cable
EVPP0108	10m 32A 3 phase Type 2 to Type 2 Superfast charging cable
	(Other cables are available, including Type 1 options)
EVPP0320	Carrying bag for EV charging cables
EVRS0040	QUBEV Smart remote wall mount for Type 2 plug holster

EVPP0100

EVRS0040

ACSR0380

BIM & CAD PACKAGE DOWNLOADS

- BIM – Revit families/IFC
- 3D models – STEP/IGES
- CAD drawings DWG/PDF

Assets are available to add to development plans and see how these units look in context. To download the assets, please visit: **www.qubev.co.uk/assets**

EVPP0320

THIS DOCUMENT CONTAINS INFORMATION THAT IS SUBJECT TO CHANGE WITHOUT NOTICE.

The latest version of this publication can be downloaded at https://www.rolecserv.com/downloads-ev-charging

Illustrations of the product and user interface are for marketing purposes only.

Brand names, logos and trademarks used herein remain the property of their respective owners.
This listing of any firm or their logos is not intended to imply any endorsement or direct affiliation
with Rolec Services Ltd. and is purely to demonstrate branding opportunities.

© 2023 by Rolec Services. All rights reserved.

EVQSD-V01-R1 QUBEV Smart Data Sheet

ROLECEV

t: 01205 724754
e: enquiries@rolecserv.co.uk

www.rolecserv.com