CI/SfB (47)
Aug 2008

Prestige Aluminium Building Products

Fascias and Soffits

- Fascia Profiles
- Bullnose & Specialist Profiles
- Planked Soffits
- Panel Soffits
- Plexus Support System
- Monocoque Support System
- Full Design Service

This literature has been supplied in PDF format.
To arrange delivery of a full set of literature for your library, for consultation with Dales Technical Department or to arrange a meeting with your local advisor please telephone Dales on: 0115 930 1521.

DALES

www.dales-eaves.co.uk

Introduction

Through a combination of experience and specialist technical expertise, Dales Fabrications Ltd have been manufacturing a comprehensive range of low maintenance eaves products for over 25 years. Extensive engineering experience combined with a passion for quality and a desire for technical innovation has meant that Dales remain a high quality and reliable source of low maintenance eaves products. This literature has been designed with the intention of helping you to specify Dales' products without complication.

If you would like any assistance with a specific project, or have any comments about how this brochure can be revised to further enhance the service offered by Dales, please e-mail: sales@dales-eaves.co.uk

CONTENTS

Introduction 2
Design Service 3

Design Considerations
Gutter Configuration 4
Fascia Profiles 5
Planked Soffits 6
Panel Soffits 7
Support Methods 8
Plexus Carcassing System 9
Ventilation 10
Secret Fix Jointing 10
Fixings 10
Coating/Finishes 11
Thermal movement & Loadings 11

Case Studies
Examples of past applications ..... 12 - 21

NBS Guidance 22
Dales Customer Support Ethic 23

Integrated, Bespoke Systems

The eaves, for most buildings, require a combination of rainwater, fascia and soffit components. Through consultation and liaison with individual specifiers on a project by project basis, Dales Fabrications design and manufacture engineered eaves systems. This combines fascia, soffit and rainwater elements providing bespoke, integrated solutions for a broad variety of building types.

Flexible Response

The total eaves concept works best through liaison at an early stage. Dales provide a National Field Sales Network who are available to visit specifiers. On submission of drawings or proposals, Dales will advise on the most efficient method of support and the practical options available. Extensive experience and technical understanding of different materials and their interaction with one another means that attractive and practicable systems can be designed.

Project Management System

From the earliest stage, a project is assigned a Project Manager, who is accountable until the completion of the job. He will liaise with you throughout and is responsible for design, pricing, manufacturing instructions, despatch, installation instructions and all other aspects of the project.

Accountable Solutions

Dales believe in total quality: quality of design, manufacture, advice and service. This commitment, combined with our ability to create total solutions uniquely suited to individual projects, puts the responsibility for system integrity and functionality on us rather than you, the specifier.

BS EN ISO 9001: Design & Manufacture

Dales Fabrications have been working within the constraints of BS EN ISO 9001 accreditation since 1993. Dales Quality Policy Statement "It is the policy of this management to allocate resources for the continuous improvement of its business activities. This will enable the company to compete successfully and also ensure that we meet the rising expectations of our customers".

Professional Indemnity Insurance

Dales Fabrications hold full Design/Professional Indemnity Insurance with a first class security in the London market. This allows architects and specifiers to use our products with confidence.

Specifying via the Dales Website

Our website gives the designer a unique opportunity to view and specify products to suit their individual project requirements.
You can access Dales Website at www.dales-eaves.co.uk.
Every product has a link to a NBS Specification, which can be copied and pasted directly into your documents.

The Environment and Dales

Dales Fabrications operate an environmental policy and seek to reduce the impact of our products and processes on the environment to a minimum. Dales Fabrications ensure that all aluminium and steel waste occurring as a result of our manufacturing processes is sent for recycling. Continuous investment in the latest CAD/CAM technology ensures that material usage is optimised, reducing waste to minimum levels. Our policy is to obtain wholly recycled aluminium sheet and extrusions where available. Our factory utilises energy efficient machinery and lighting and waste paper is saved for re-cycling by a local firm. Whilst protection of our materials during transit is paramount, regular assessments are carried out to keep packaging materials to a minimum.

Design Considerations : Gutter Configuration

Gutter Configuration : Hidden or Exposed

Gutters have traditionally been exposed and Dales offer a wide range of decorative and functional profiles, which can be used to compliment an exposed gutter configuration. Alternatively a more contemporary appearance can be achieved by utilising a concealed eaves gutter.

Exposed Gutter Configuration

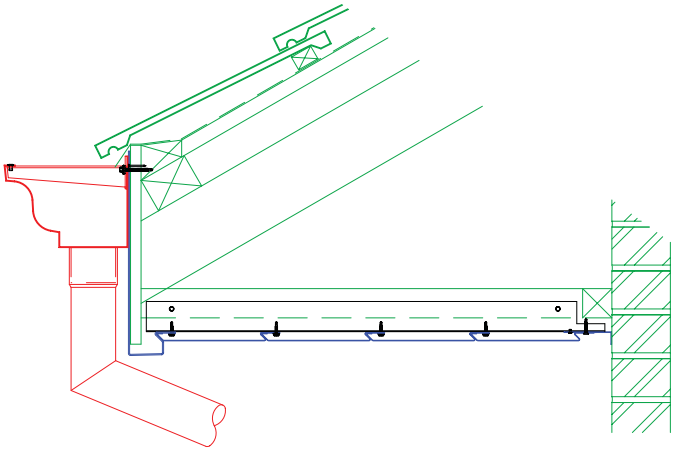

Hidden Gutter Configuration

Hidden gutter configurations provide a more contemporary appearance to the eaves and allow more imaginative fascia profiles to be used from simple vertical fascias to trapezoidal, aerofoil and elliptical designs.

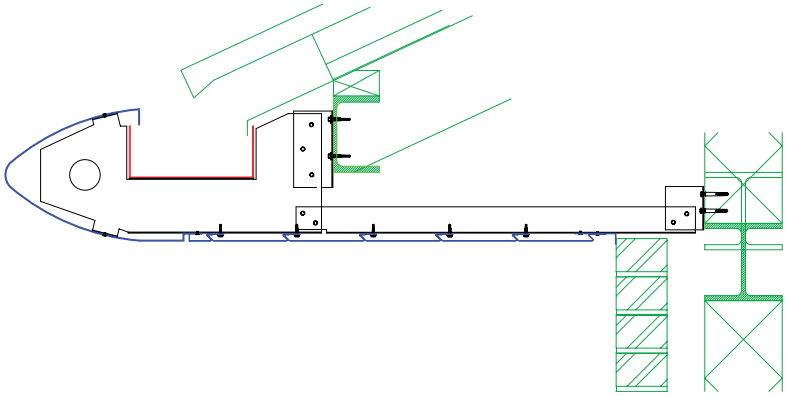

Design Considerations : Fascia Profiles

Dales are able to design and manufacture fascia profiles to almost any shape, size or proportion including curved and elliptical designs. As part of our specification service detailed drawings will be prepared which can be inserted directly into your own drawings. All systems are covered by our 25 year guarantee.

Example drawings can be downloaded from www.dales-eaves.co.uk

Whilst all profiles are designed specifically for individual projects a number of typical profiles are indicated below.

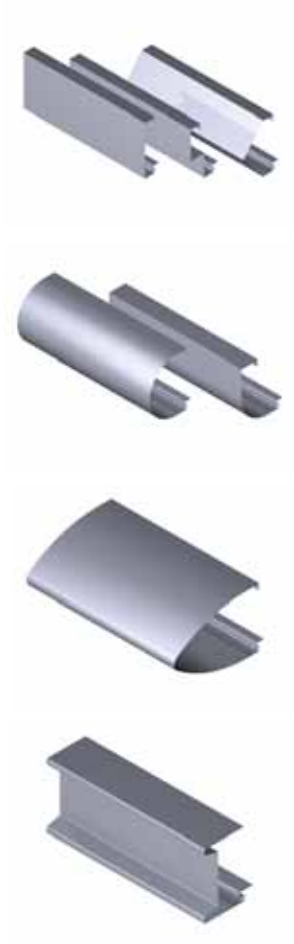

Whilst relatively simple in design, square and rectangular profiles provide a very pleasing if more traditional appearance to the eaves

Bullnoses and quadrant fascia profiles offer a more contemporary appearance and are now a very popular selection.

Elliptical fascias provide a modern and sleek eaves profile whilst keeping the leading edge of the system to a minimum. This can be very useful if you wish to minimise the appearance of a deep roof construction.

Dales Sigma Fineline is a recent addition to the fascia range. Fascias are individually pressed from sheet aluminium to create the appearance of a structural steel member.

Soffit Systems

All fascia profiles are available to suit our standard soffit range, details of which are explained overleaf. The detail into which the soffit interlocks is indicated below.

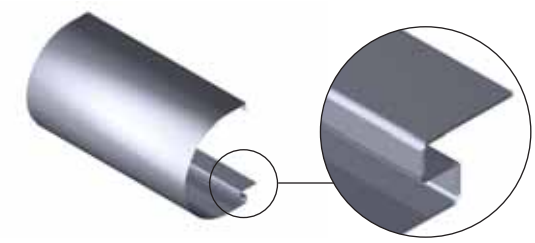

Fascia toe detail to suit secret fix panel soffit systems

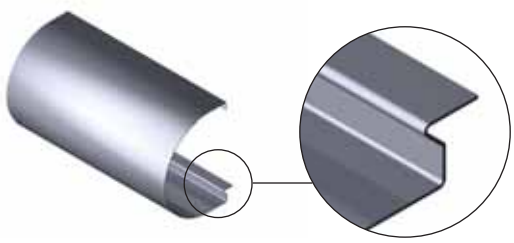

Fascia toe detail to suit Kwikfix soffit plank systems

Design Considerations : Planked Soffits

Kwikfix Soffit Planks

Free from both the limitations and relative high cost of similar extrusion based plank systems, Kwikfix Soffit planks are a versatile but attractive secret fix soffit planking system formed from flat sheet aluminium.

Kwikfix Planks

The Kwikfix System gives the appearance of a traditional "shiplap" timber soffit and is a truly secret fix solution. Planks are formed in 3m lengths as standard and are modulated to suit the soffit width.

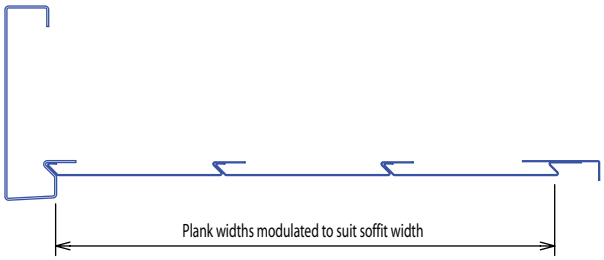

Perpendicular Kwikfix Planks

Dales Kwikfix Planks can be orientated perpendicular to the building, providing an aesthetically pleasing alternative to the system indicated above. Planks are supplied pre-cut to suit soffit widths with fascia and closure profiles manufactured to take up normal building tolerances.

Tapered planks can also be utilised to form soffits to curved areas.

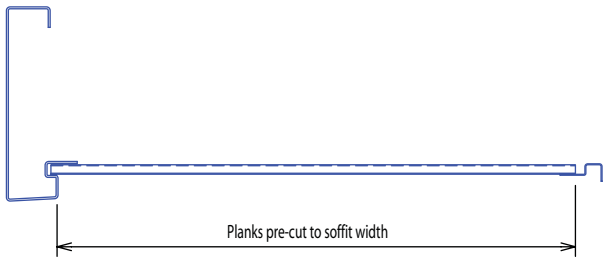

A popular option is to utilise parallel planks to the eaves and perpendicular planks to the verge.

Design Considerations : Panel Soffits

Soffit Panels

If a more uninterrupted appearance to the soffit is desirable Dales offer two soffit panel options, both systems are available to suit any width of soffit. In addition both systems can be manufactured to suit curved, stepped or sloping soffits as required.

Standard Panels

In many cases, particularly where soffits are at more than 2 storeys, the need to eliminate fixings is reduced. Dales standard panel system is an attractive yet practical solution offering a lower cost panel soffit detail where colour matched fixings are obscured from view within the recessed joint. Longitudinal joints in panels are free of visible fixings.

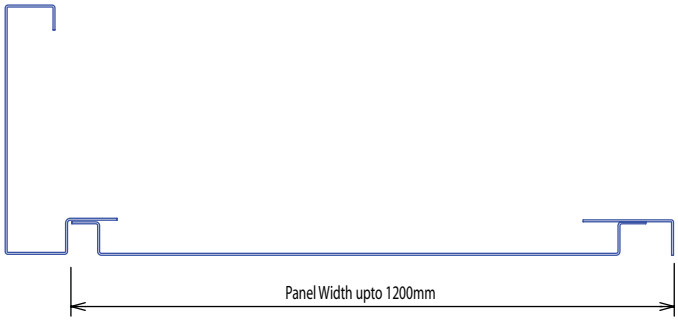

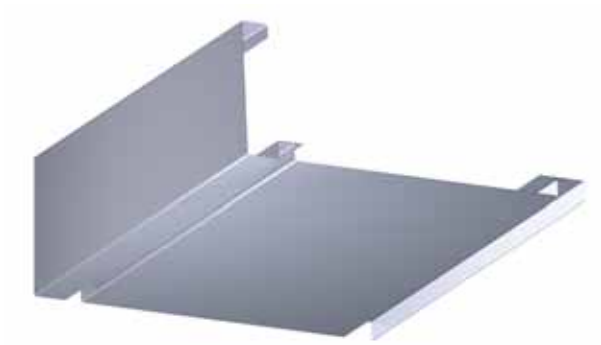

Interlocking Panels

Dales Interlocking Panels offer a secret fix alternative. Visible fixings are eliminated and panels are secretly jointed and stiffened offering a truly uninterrupted soffit line. Soffits up to 1.5m wide can be accommodated in a single panel with the recessed shadow gap adjacent to the wall accommodating normal building tolerances. Panels are generally supplied in 3m lengths but can be modulated to co-ordinate with gridlines or fenestration, if required.

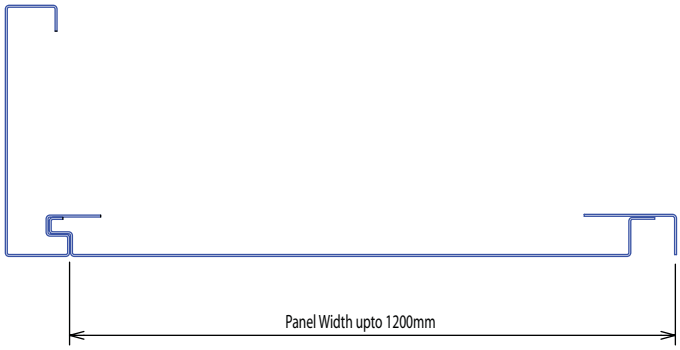

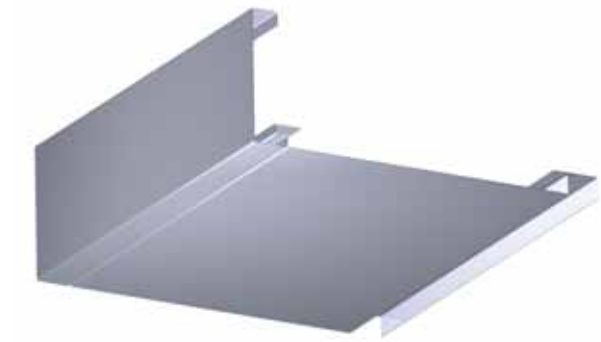

Stepped Interlocking Panels with bullnose fascia and internal gutter system.

Design Considerations : Support Methods

Careful consideration should be given to the method of support. Options range from simple timber sub-structure, supplied by others, to Dales Plexus Carcassing System. The selection of the support method will depend upon many factors. Dales Technical department offer advice on the selection of the support system and can be contacted on 0115 930 1521, alternatively you may wish to meet with a technical advisor to discuss your specific requirements in detail. As part of the design service Dales will prepare details and calculations to ensure that the method of support is optimised for the application in question. Numerous example drawings are available to download in both DWG & DXF format from www.dales-eaves.co.uk

Timber or steel supports

Fascia soffit systems can be fixed directly to timber or steel primary structure, however great care is required to ensure that the line of the structure is to an acceptable level as the fascia and soffit will follow this line.

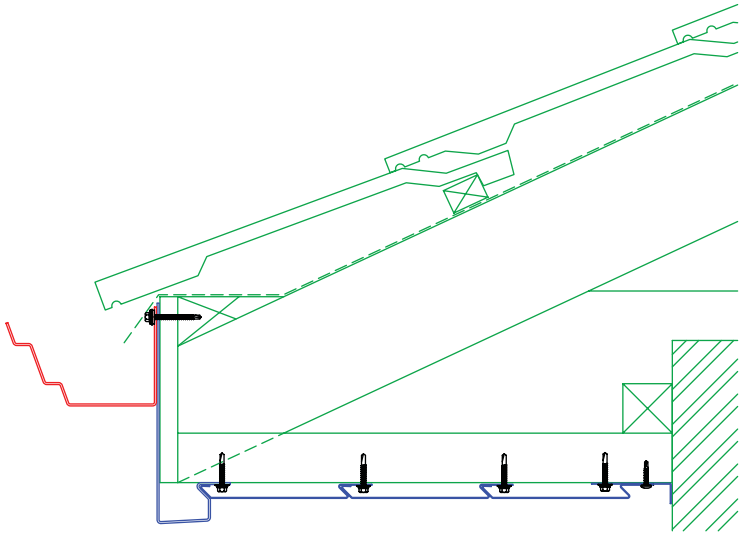

Even with the greatest of care given during the installation of the primary structure there are difficulties in ensuring a lined and levelled finish as bowing and twisting can occur as the roof is loaded out, ultimately providing an uneven surface onto which the fascia and soffit will be installed. The introduction of a secondary support system can eliminate this ensuring a precise line to the eaves regardless of the accuracy of the primary structure.

Plexus Carcassing System

In its simplest form a secondary support system may consist of only one or two pieces of galvanised steel angle, designed to incorporate appropriate tolerances and positioned to provide a straight and level substructure onto which the eaves system can be installed.

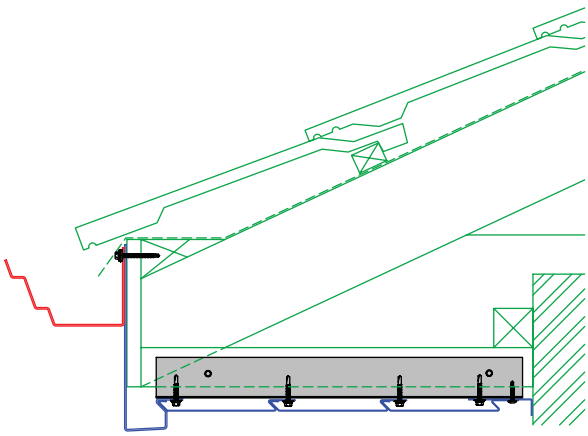

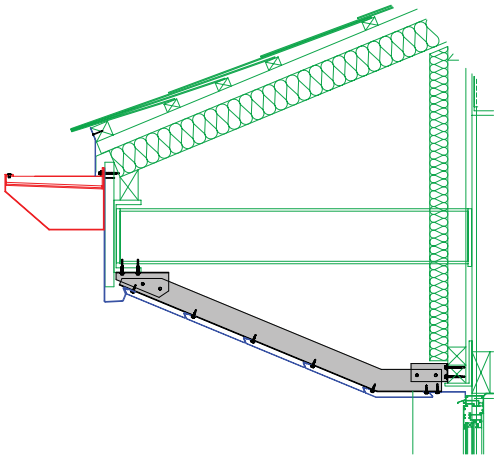

Design Considerations : Support Methods

Plexus Carcassing - Monocoque Bracket

The Monocoque system reduces the number of individual components making up the support structure, reducing fixing time whilst ensuring an accurately lined and level fascia and soffit installation. Designed specifically for each application the Monocoque system can be used in conjunction with timber, steel or concrete primary structure.

Dales Plexus carcassing system can be as simple as a single bracket, designed to support the gutter system and provide fixing locations for fascia and soffit elements whilst accommodating normal building tolerances.

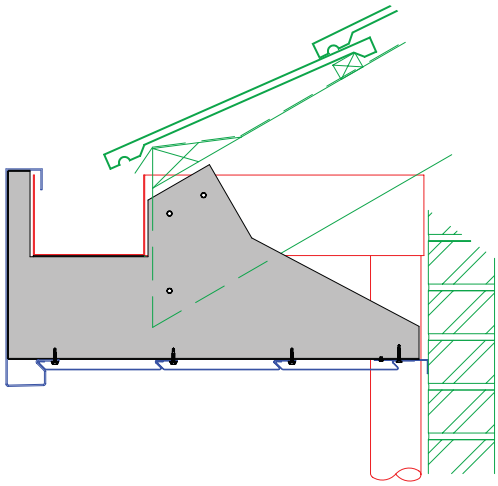

Alternatively the Plexus carcassing system can consist of several brackets and angles carefully designed to fix together to allow speed of installation whilst ensuring that the eaves system will be straight and level regardless of the line of the primary structure.

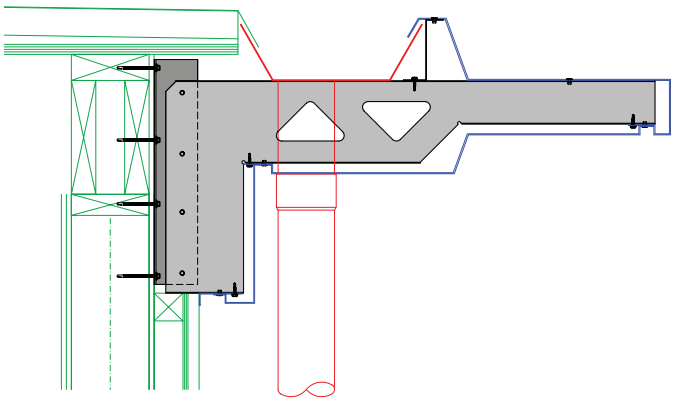

Additional Design Considerations

Ventilation

Ventilation equivalent to a continuous 10 or 25mm gap can be incorporated into Dales eaves systems. Comprising either a single row of 31 x 2mm slots for 10mm or two rows of 31 x 2.5mm slots for 25mm ventilation, the slots are sized to prevent the ingress of nesting insects and therefore do not require additional mesh. Ventilation can be incorporated into fascias or planked and panelled soffits and can also be in a hidden location if necessary

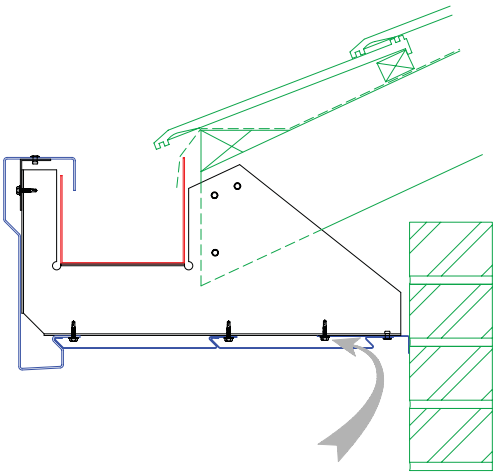

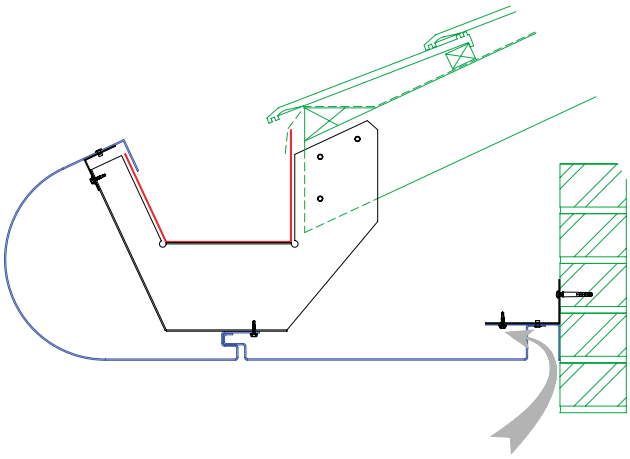

Secret Fix Joints

Whilst fixings at joint locations are positioned to be as unobtrusive as possible, a secret fix joint option is also available. Factory applied jointing strips serve to both stiffen panel and fascia profiles and provide a joint completely free of visible fixings. In addition joints can be modulated with fenestration or grid centres if required.

Fixings

Fixings always present a potential weak link in any system, as such Dales take the process of fixing selection as seriously as the design of the system itself. All fixings have been selected after careful consultation with manufacturers and rigorous testing for both ultimate strengths and potential incompatibility issues. All necessary fixings are supplied as part of the complete package from Dales.

Additional Design Considerations

Finishes

There are three main architectural finishes that can be applied to aluminium. These are polyester powder coating, PVF2 and anodising.

Polyester powder coating (Dales Standard Finish)

Easily the most popular choice for aluminium coating. It offers significant low maintenance life and a wide colour range, including attractive metallic finishes. Dales only use coaters approved by polyester powder manufacturers and only those that are ISO 9002 quality assured. All coating is to BS 6496. For a current colour swatch, please contact Dales Project Management Team on tel: 0115 930 1521.

PVF2

Less widely used in the UK than polyester powder coating but is still the preference of some clients and specifiers. PVF2 is a two or three part wet spray coating which is applied after components are manufactured. It does give significant low maintenance life but is generally more expensive than polyester powder coating and can increase lead times.

Anodised

A chemical process requiring a higher priced grade of aluminium than those used for paint finishes. Whilst anodising gives significant low maintenance life, only a comparatively limited colour range is available.

Mill Finish

Whilst hidden items are generally supplied in mill finished aluminium, Dales do not recommend it as a suitable finish for visible surfaces.

	PPC	PVF2	Anodising
Impact Resistance	Excellent	Good	Excellent
Scratch Resistance	Good	Poor	Excellent
Repair Characteristics	Excellent	Good	None
Available Colour Range	Excellent	Good	Poor
Metallic Finishes	Good	Very Good	Excellent
Guarantee	25 Years	25 Years	25 years
Cost	Effective	High	High

Durability

Dales systems are designed to give a low maintenance life of 40 years in rural and suburban conditions, 25 years in industrial conditions. For marine environments, the project requirements should be discussed to assess the best material and coating protection.

Loadings

Both gutter and fascia soffit systems are designed to accommodate loadings in excess of those induced when the gutters are operating at full capacity. Snow guards are recommended where sliding snow may cause impact loading in excess of normal design criteria (see BS6399 Part 3).

Thermal movement

Dales design all systems to accommodate the extremes of temperature typical in the UK.

Aluminium Eaves Systems - Case Study 1

Kwikfix Fascia & Soffit with External Gutter on timber supports

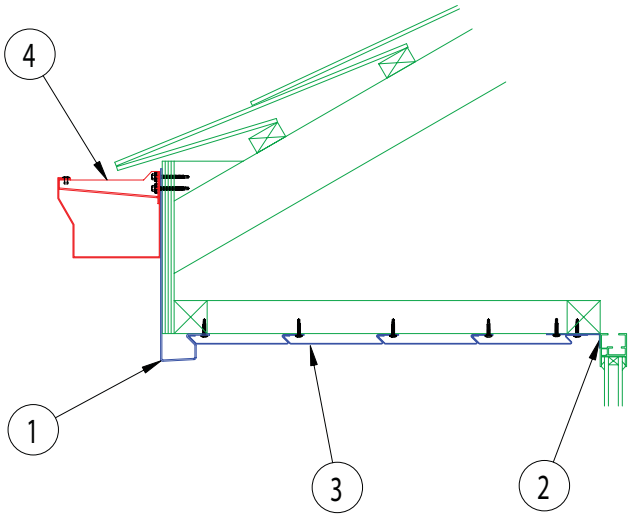

LEGEND

1. Dales fascia in 14g aluminium
2. Dales closure angle in 18g aluminium
3. Dales Kwikfix soffit planks in 18g aluminium
4. Dales Classic gutter in aluminium

Aluminium Eaves Systems - Case Study 2

Kwikfix Fascia & Soffit with Internal Gutter & Monocoque Support

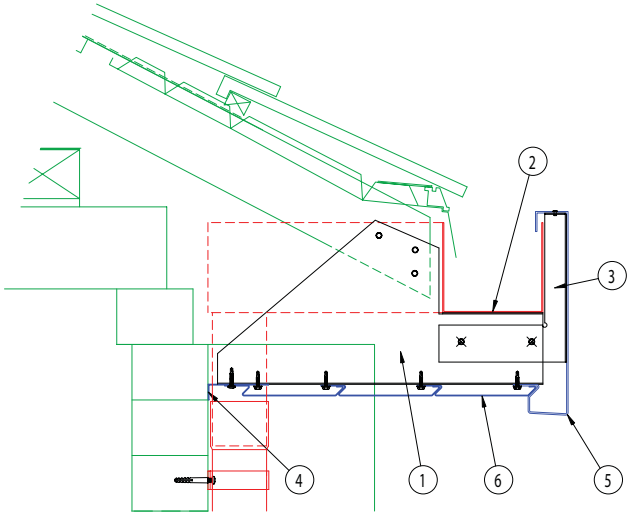

LEGEND

1. Dales diaphragm bracket in 16g galv @ 600mm ctrs
2. Dales purpose made gutter / backbox outlet in 16g mill finished aluminium
3. Dales fascia support in 16g galv @ 600mm ctrs
4. Dales closure angle in 18g aluminium
5. Dales fascia in 14g aluminium
6. Dales Kwikfix planks in 18g aluminium

Aluminium Eaves Systems - Case Study 3

Traditional Fascia with Hidden Gutter & Interlocking Panel Soffit

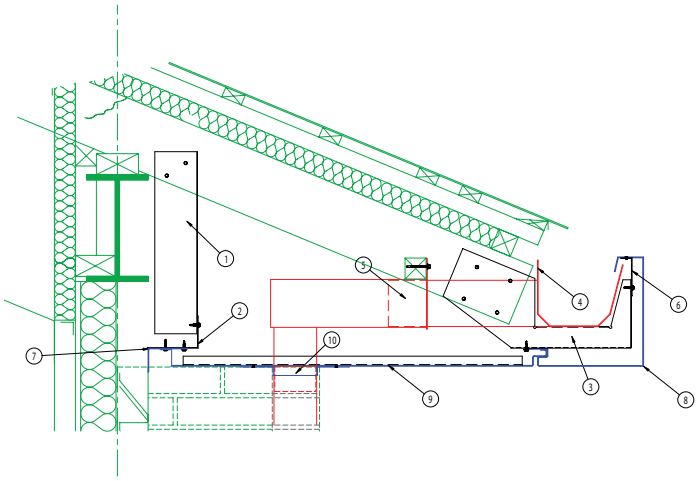

LEGEND

1. Dales support cleat, 16g galv steel @ 600mm
2. Dales soffit trimmer, 16g galv steel
3. Dales gutter support bracket, 16g galv steel @ 600mm
4. Dales epdm lined gutter
5. Dales back box outlet, mill finished aluminium
6. Dales fascia trimmer, 16g galv steel
7. Dales closure angle, 16g aluminium
8. Dales secret fix fascia, 14g aluminium
9. Dales secret fix soffit inc. Stiffeners, 14g aluminium
10. Dales 101.6sq pipe collar, 14g aluminium
11. Dales 3m 101.6sq secret fix rwp, 14g aluminium

Aluminium Eaves Systems - Case Study 4

Traditional Fascia with Panel Soffit & Hidden Gutter

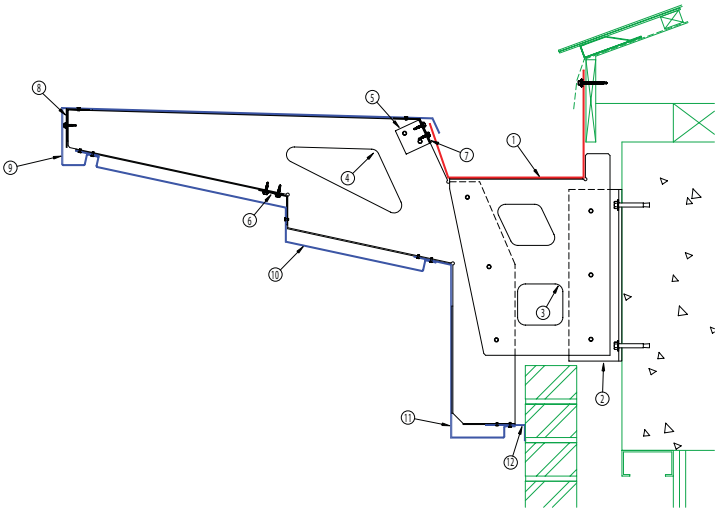

LEGEND

1. Dales purpose-made gutter in 14g. aluminium
2. Dales primary support cleat in 6mm steel G.A.M.
3. Dales gutter support diaphragm in 10g. galvanised steel.
4. Dales fascia & soffit support diaphragm in 16g. galv. Steel.
5. Dales fixing cleat in 16g. galvanised steel.
6. Dales continuous trimmer in 16g. galvanised steel
7. As item 6.
8. As item 6.
9. Dales upper fascia in 14g. aluminium P.P.C.
10. Dales soffit panel in 14g. aluminium P.P.C.
11. Dales lower fascia in 14g. aluminium P.P.C.
12. Dales soffit closure angle in 16g. aluminium P.P.C.

Aluminium Eaves Systems - Case Study 5

Bullnose Fascia with Hidden Gutter & Interlocking Panel Soffit

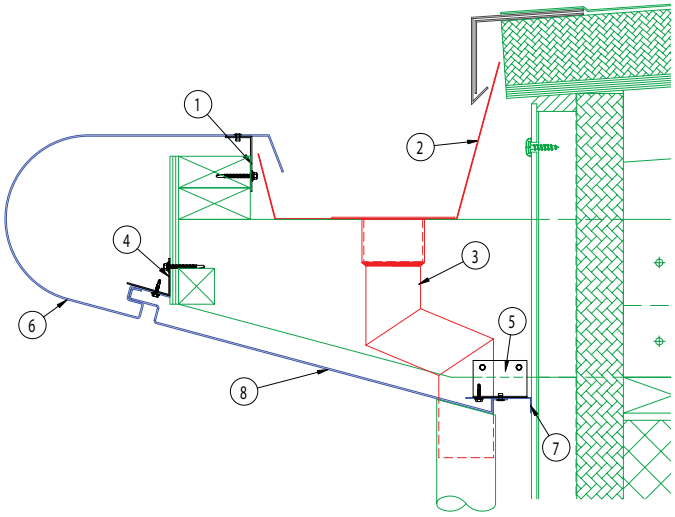

LEGEND

1. Dales fascia trimmer, 16g galv steel
2. Dales single skin membrane gutter
3. 76.2dia 102mm 112.5º rwp offset
4. Dales soffit trimmer, 16g galv steel
5. Dales soffit cleat, 16g galv steel @ 600mm c/c
6. Dales bullnose fascia, 14g aluminium
7. Dales closure angle, 18g aluminium
8. Dales soffit panel, 14g aluminium

Aluminium Eaves Systems - Case Study 6

Bullnose Fascia with Hidden Gutter & Interlocking Curved Panel Soffit

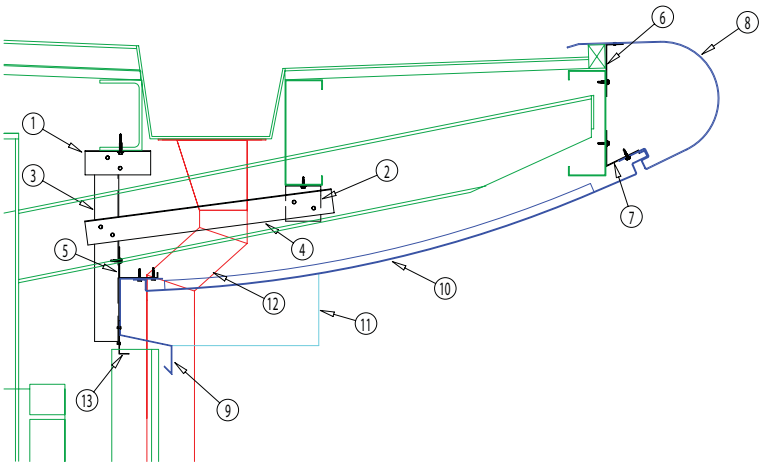

LEGEND

1. Dales fixing cleat in 16g. Galvanised steel @ 0.75m centres
2. As item 1.
3. Dales fixing strut in 16g. Galvanised steel @ 0.75m centres
4. As item 3.
5. Dales support trimmer in 16g. Galvanised steel.
6. As item 5.
7. As item 5.
8. Dales bullnose fascia in 14g. Aluminium
9. Dales soffit closure trim in 16g. Aluminium
10. Dales curved soffit panel in 14g. Aluminium
11. Dales semi-circular pipe collar in 14g. Aluminium
12. Dales tapered outlet with welded compound offset in 14g. Aluminium (mill finish)
13. Dales weather flashing in 18g. Aluminium (mill finish).

Aluminium Eaves Systems - Case Study 7

Sigma Fascia with Hidden Gutter & Kwikfix Plank Soffit

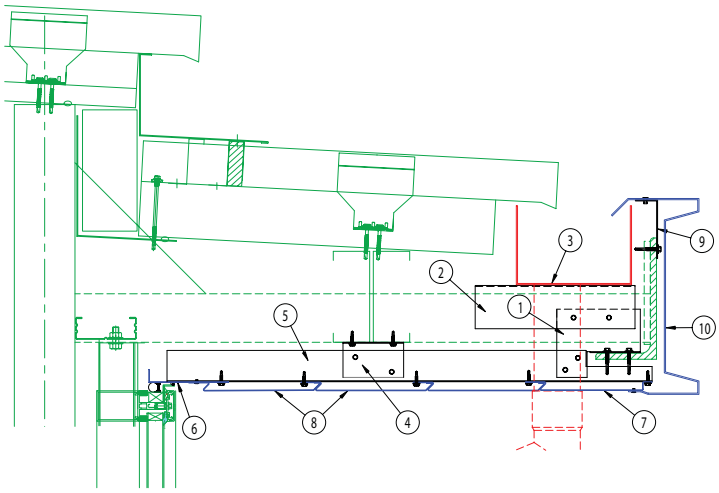

LEGEND

1. Dales fixing cleat in 14g. galvanised steel
2. Dales fixing cleat in 14g. galvanised steel
3. Dales purpose made gutter in 16g. aluminium
4. Dales fixing cleat in 16g. galvanised steel
5. Dales soffit trimmer in 16g. galvanised steel
6. Dales closure angle in 18g. aluminium P.P.C.
7. Dales starter plank in 18g. aluminium P.P.C.
8. Dales Kwikfix planks in 18g. aluminium P.P.C.
9. Dales fascia support angle in 16g. galvanised steel
10. Dales Sigma fascia in 14g. aluminium P.P.C.

Aluminium Eaves Systems - Case Study 8

Stepped Fascia with Hidden Gutter & Standard Panel Soffit

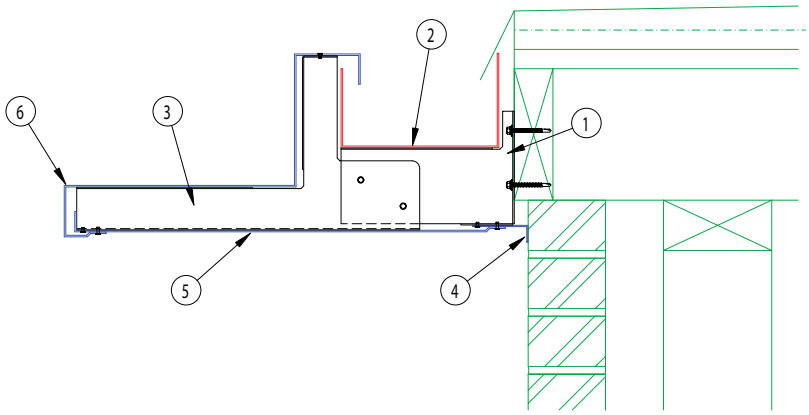

LEGEND

1. Dales support bracket in 1.6mm galv. Steel, fixed @ 400mm c/c.
2. Dales hidden gutter in 2.0mm mill finish aluminium.
3. Dales support bracket in 1.6mm galv. Steel, fixed at 400mm c/c.
4. Dales soffit closer angle in 1.6mm aluminium P.P.C.
5. Dales soffit plank in 2.0mm aluminium P.P.C.
6. Dales fascia in 2.0mm aluminium P.P.C

Aluminium Eaves Systems - Case Study 9

Quadrant Fascia & Standard Panel Soffit

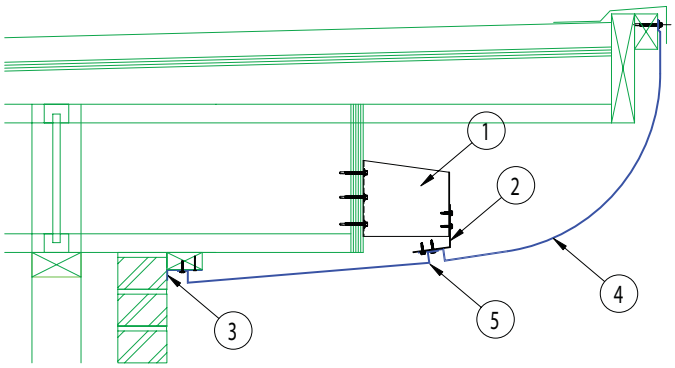

LEGEND

1. Dales diaphragm bracket @ 600mm C.C, 16g galv steel
2. Dales soffit trimmer, 16g galv steel
3. Dales closure angle, 14g aluminium P.P.C
4. Dales elliptical fascia, 14g aluminium P.P.C
5. Dales soffit panel, 14g aluminium P.P.C

Aluminium Eaves Systems - Case Study 10

Bullnose Fascia with Standard Panel Soffit

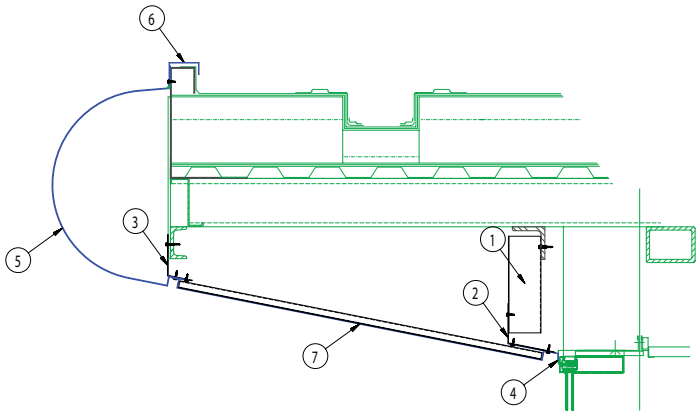

LEGEND

1. Dales fixing cleat, 16g galv steel @ 600mm c/c
2. Dales soffit trimmer, 16g galv steel
3. Dales soffit trimmer, 16g galv steel
4. Dales closure angle, 16g aluminium pvf2
5. Dales bullnose fascia, 12g aluminium pvf2
6. Dales capping, 16g aluminium pvf2
7. Dales soffit panel, 14g aluminium pvf2

NBS Guidance

The NBS specification clauses within Dales product literature have been compiled in collaboration with NBS Services Ltd using NBS Plus project specifications based on the National Building Specification. The clauses are intended to enable the contractor to clearly identify the product required and the work involved in installation. (The contractor is required to comply with Dales' sitework instructions by NBS Preliminaries clause A33 / 130).

Individual Project Specifications

Any member of Dales Project Management team will be pleased to review any completed NBS clause to ensure compliance with this guidance. Alternatively, we are happy to provide complete NBS specification clauses tailored to suit your individual project requirements. For more information please contact Dales Project Management team on Tel: 0115 930 1521.

NBS Specification Services

NBS Plus subscribers go to www.nbsplus.co.uk and search for Dales Fabrications under 'The Content' in the 'Manufacturers' drop down menus.

Relevant Sections Within NBS

Dales Eaves Systems should be specified within one of the following two clauses:

For eaves systems combining one of Dales' range of gutters.

R10 : 321 Combined fascia, soffit and gutter

For eaves systems excluding a gutter system.

G20 : 950 Proprietary fascias/barges/soffits

The following draft specification can be inserted under either heading and includes specification information for both planked systems and panel soffit systems which should be deleted as appropriate.

Clauses specifically relating to Planks are shown in blue whilst clauses relating to panels are shown in red.

- **Manufacturer:**
  Dales Fabrications Ltd, Crompton Road Industrial Estate, Ilkeston, Derbyshire DE7 4BG
  Tel: 0115 930 1521 Fax: 0115 930 7625.
  email: sales@dales-eaves.co.uk website: www.dales-eaves.co.uk
- **Product reference**
  Kwikfix Fascia & Soffit System
  Panel Fascia & Soffit System
- **Material/Grade:**
  Fascia & soffit, Aluminium Sheet to EN 485/515/573 : Designation NS3, Condition H14, supplied by BS EN ISO 9002 registered stockist to ensure traceability.
  Plexus Carcassing to EN10143/Z2: 1993
- **Profile:**
  Please specify fascia profile (See page 5 for guidance)
- **Size:**
  Fascia depth, ... mm
  Soffit width, ... mm
- **Gauge:**
  Fascia 2mm (14 gauge) Soffit 1.2 mm (18 gauge)
  Fascia 2mm (14 gauge) Soffit 2mm (14 gauge)
- **Finish:**
  Fascia soffit, polyester powder coated to outside faces only, colour from Syntha Pulvin Plus range coated by only Syntha Pulvin approved and BS EN ISO 9002 registered applicators. Plexus Carcassing System, self finish.
- **Colour:**
  Fascia: RAL.....
  Soffit: RAL.....
- **Fixings:**
  All fixings to be completely concealed wherever possible, any exposed fixings to be colour matched. All fixings to be provided by Dales Fabrications Limited.
- **Supports:**
  Dales Plexus Carcassing System in pre-galvanised steel at centres recommended by Dales Fabrications Limited
- **Ventilation:** (Delete as appropriate)
  Preformed ventilation slots equal to a continuous strip ..... mm wide, slots sized to stop the ingress of nesting, winged insects without the need for backing mesh.
- **Accessories:**
  Factory fabricated stopends, internal & external corners, gable box ends, apex pieces, soffit end closures, mitre cover strips etc. as required.
- **Installation:**
  To be fixed in strict accordance with Dales Fabrications fixing instructions. List of recommended installers available on request.
- **Method of Jointing:**
  Fascia: Butt jointed with 3mm expansion gap, secured with 3mm pop rivet through pre-punched slot into profiled butt strap.
  (Standard Fascia Joint - delete as appropriate)

  Fascia: Butt jointed with 3mm expansion gap, secured with Dales secret fix profiled buttstrap and clips. (Secret Fascia Joint - delete as appropriate)

  Soffit: Planks to be butt jointed with 1mm gap. Joints must occur on supports. All joints to be staggered.

  Soffit: Panels to be butt jointed with 3mm expansion gap, secured with Dales secret fix profiled buttstrap and clips.

Dales Customer Support Ethic

Dales design and manufacture bespoke aluminium eaves systems and the examples shown herein represent only a fraction of the hundreds of schemes in which Dales have been involved over the years. Almost any eaves configuration and profile is achievable and with consultation and design input by Dales at the earliest opportunity, a system to suit your requirements is assured.

Dales are happy to prepare designs for architects and builders alike, regardless of the design stage at which the development has reached. However experience has shown that consulting Dales early in the design process can eliminate both costly yet unnecessary structural elements and inappropriate systems being specified. In addition early consultation allows profiles to be optimised to keep wastage to a minimum, providing the most cost effective solution possible.

As part of the specification service Dales will carry out design and drainage calculations as required and prepare detailed drawings which can be supplied electronically for inclusion into your own working drawings. In addition Dales are happy to prepare detailed specification clauses for the agreed system.

Dales technical department will respond to e-mailed, faxed and posted requests for assistance with design, however, consultation with a local technical advisor is invariably beneficial. Contact details of your local advisor should be attached to this document, if this is not the case, or if you wish to discuss your project with the in-house Project Management and design team please telephone 0115 930 1521.

If you would prefer to specify Dales products without consultation, Dales offer a unique specification tool via their website. Numerous examples of past details are available for download in editable dwg and dxf format along with their associated specification clauses. The examples available for download are added to on a regular basis ensuring that the latest information is available at any time. Dales continue to offer this information for download without the need for passwords or login procedures.

To take advantage of this facility visit www.dales-eaves.co.uk and follow the link to “fascia examples”

Other products available from Dales

Rainwater Systems

Dales design and manufacture a wide range of rainwater goods that include both standard and bespoke systems. These systems can be integrated into our fascia soffit systems to provide a complete, low maintenance eaves system.

Details of Dales standard rainwater systems can be found in our 'Architectural Aluminium Rainwater Systems' literature.

Solar Shading and Louvre Systems

Dales design and manufacture solar shading systems on an individual project basis. Further information is contained in our 'Solar Shading and Louvre Products' literature.

Nordal Rainwater System

The Nordal half round rainwater system is the first low maintenance aluminium system that is comparable to plastic in price. It is particularly suited to social housing projects, as it offers exceptional value for money.

Further information and prices are contained in the 'Nordal - Aluminium Rainwater System' literature.

Meridian Coping Systems

Dales Fabrications design and manufacture a range of wall capping systems in aluminium which provide an attractive and low maintenance alternative to more traditional stone copings.

Further information is available in our "Meridian Coping Systems" literature.

Dales Fabrications Ltd
Crompton Road, Industrial Estate,
Ilkeston, Derbyshire
DE7 4BG

Tel: 0115 930 1521
Fax: 0115 930 7625
website: www.dales-eaves.co.uk
email: sales@dales-eaves.co.uk