Residential Lead Free Flat Concealed Pendent Model: RC-RES, (SIN/RD206), K-Factor 4.9

General Description

The Model RC-RES Residential Flat Concealed Sprinklers are automatic sprinklers of the compressed fusible solder type. These are decorative and fast response. The Cover Plate Assembly hides the Deflector, Heat Responsive Element etc., which is in turn concealed above the ceiling. The cover plate has a flat profile, and its diameter is extremely small (2-5/8 inch, 68mm). The push-on and/or thread-on, thread-off design of the concealed cover plate assembly allows easy installation of the cover plate. Therefore, the Model RC-RES should be your first choice when aesthetics is the major consideration for ultimate appeal and unbeatable performance is desired. The Model RC-RES is designed for the residential occupancies and it is perfect for use in homes, hotels and other living quarters.

The Model RC-RES is to be used in wet pipe residential sprinkler systems for One- and Two- Family Dwellings and Manufactured Homes per NFPA 13D; wet pipe residential sprinkler systems for Residential Occupancies up to and Including Four Stories in Height per NFPA 13R; or, wet pipe sprinkler systems for the residential portions of any occupancies per NFPA 13.

The Model RC-RES has a 4.9 (70.6 LPM/bar1/2) K-factor that meets the required residential flow rates with minimal residual pressure, which allows for smaller pipe sizes and water supply requirements. For extended installation flexibility, the Model RC-RES provides 1/2 inch (12.8mm) vertical adjustment. This adjustment in installation decreases the need for precise cutting of the pipe that drops to the sprinkler and allows for a perfect fit with a range of pipe lengths. The heat sensitivity and water distribution design of Model RC-RES allows for an increased chance of residents' escape or evacuation in case of fire. However, residential fire sprinkler systems are not a substitute for fire safety awareness or fire safety construction required by building codes.

"Lead Free" is defined in the Reduction of Lead in Drinking Water Act (S.3874) endorsed by AWWA's Water Utility Council, and California Assembly Bill #1953 as having less than or equal to a weighted average of 0.25% lead in wetted surface of pipes, plumbing fittings and fixtures.

Warnings

The Model RC-RES must be installed and maintained in accordance with the rules stated herein as well as in compliance with the applicable standards of the National Fire Protection Association regulations and the standards of any other authorities having jurisdiction.

In the event of this condition, consult the authorities having jurisdiction for guidance and approval. Failure to do so may impair the integrity of these devices. It is the responsibility of the installing contractor to provide a copy of this document to the owner or his representative, and in turn, it is the obligation of the owner to provide a copy of this document to a succeeding owner. The owner is responsible for maintaining their fire protection system and devices in proper operating condition. The installing contractor or sprinkler manufacturer should be contacted with any related questions.

Continued Overleaf

© 2009 Rapidrop
Rapidrop® is a registered trade mark.
Rapidrop Global Limited
Registered in England No. 5503278

Rapidrop Global
Rutland Business Park, Newark Road, Peterborough, PE1 5WA, United Kingdom
Tel: +44 (0) 1733 847 510 Fax: +44 (0) 1733 553 958
e-mail: rapidrop@rapidrop.com web: www.rapidrop.com

UL LISTED

Residential Lead Free Flat Concealed Pendent
Model: RC-RES, (SIN/RD206), K-Factor 4.9

Technical Data

Approvals: cULus Listed,
Sprinkler Identification Number (SIN): RD206
Maximum Working Pressure: 175psi (12.1bar)
Discharge Coefficient (Nominal K-Factor):
K=4.9 GPM/psi1/2 (70.6 LPM/bar1/2)

Temperature Rating:
162°F (72℃) Sprinkler with 140°F (60℃) Cover Plate
175°F (79℃) Sprinkler with 162°F (72℃) Cover Plate

Colour Code (Sprinkler)
162°F (72℃): Uncoloured
175°F (79℃): White

Colour Code (Cover Plate)
140°F (60℃): No Mark
162°F (72℃): White - Colour Mark

Vertical Adjustment: 1/2 inch (12.8 mm)

Cover Plate Finishes:
White Painted, Ivory Painted, Nickel Plated or
Any Colour (Choose a colour of acceptable colours)
Physical Characteristics: Ref. Figure 1

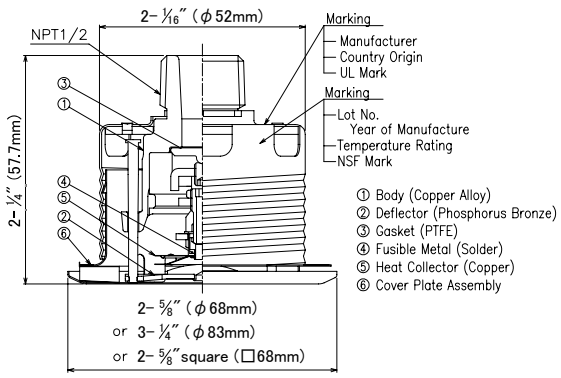

FIGURE 1. Model RC-RES K=4.9

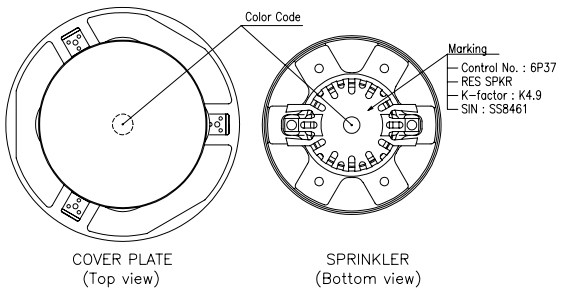

FIGURE 1-1. Marking (Colour Code)

Operation

In case of fire, the solder component that holds together the Cover Plate and the Retainer melts. Then, the Cover Plate is released at once. As a result, the Deflector drops down to the intended position. Two Heat Collectors are exposed to fire, and when sufficient heat from the fire is recorded, internal components of the sprinkler to fall apart. This leads to allow the water flow to be distributed on the affected by fire area. (Ref. Figure 2)

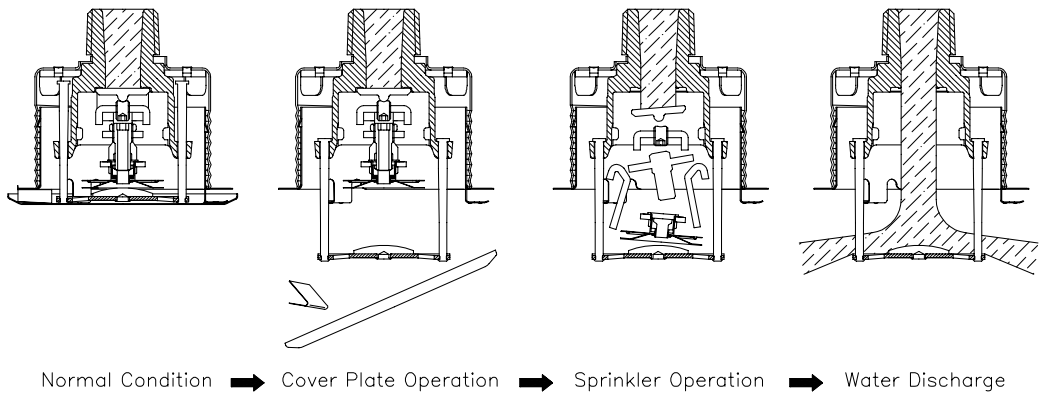

FIGURE 2. OPERATION PROCESS (The figure is for illustrative purpose only)

Continued Overleaf

© 2009 Rapidrop
Rapidrop® is a registered trade mark.
Rapidrop Global Limited
Registered in England No. 5503278

Rapidrop Global
Rutland Business Park, Newark Road, Peterborough, PE1 5WA, United Kingdom
Tel: +44 (0) 1733 847 510 Fax: +44 (0) 1733 553 958
e-mail: rapidrop@rapidrop.com web: www.rapidrop.com

LISTED

Residential Lead Free Flat Concealed Pendent Model: RC-RES, (SIN/RD206), K-Factor 4.9

Design Criteria

The herein stated rules for use and installation of Model RC-RES are provided by the manufacturer and must be strictly implemented for safe and full results.

NOTES

Residential Fire Sprinkler Systems should only be designed and installed by individuals who are completely familiar with automatic sprinkler system design, installation procedures, and techniques. Several criteria may apply to the installation and usage of each sprinkler. Consequently, it is recommended that the sprinkler system designer review and develop a working understanding of the complete list of criteria prior to initiating the design of the sprinkler system.
Questions concerning sprinkler installation and usage criteria, which are not coverage by the following instructions, should be submitted to Contact Company. Include sketches and technical details as appropriate. In some instances, the requirements of this document may concern specifications which are more stringent and which take precedence over those specified in NFPA 13, 13D, 13R, or by the authority having jurisdiction.

The Model RC-RES must not be used in applications where the air pressure above the ceiling is greater than that below.

The spray from the sprinkler is distributed radically outward and downward from the sprinkler deflector. Consequently, the sprinklers must be located such that there will be no blind spaces shielded from spray by partitions, room dividers, overhangs or other parts of the dwelling structure.
The number of sprinklers within each compartment (as defined by NFPA 13, 13D, or 13R) must be kept as small as possible. Do NOT use more sprinklers than necessary to cover a particular space.
Use only the Cover Plate provided with the Model RC-RES. The sprinkler must be secured in place by firmly fastening the sprinkler system piping to the structure. If the sprinkler is not properly secured in position, reaction forces resulting from sprinkler operation could alter its orientation and its water distribution pattern.

Obstruction to Water Distribution
Locations of sprinklers must follow the obstruction rules of NFPA 13 for Residential Sprinklers.

General Service Conditions
The Model RC-RES must only be utilized in WET PIPE sprinkler systems.

Heat Source Criteria
Refer to NFPA 13D or 13R for the requirements relating to the prevention of possible activation of the Heat Responsive Element of Model RC-RES, due to exposure to a heat sources other than an actual fire.

Precautionary Warnings for Corrosive Environments
The Model RC-RES should not be installed where they may be subjected to a corrosive environment including the following:
(1) Chlorine ion and Chloride environment.
Stress corrosion cracking may be caused by exposure to environments with Chlorine ion and Chloride. Exposure to this environment may result in sprinklers operating under Non-Fire conditions or Not Operating when exposed to an actual fire.
(2) Sprinkler system piping with Copper.
Sprinkler systems should be constructed in compliance with the applicable standards and the requirements for the copper piping when copper piping is used in the sprinkler system. (Reference standards NFPA 13, ASTM B813, B828, and CDA (Copper Development Association) – Solder Joint)
All residual flux must be removed from the interior and exterior of copper piping by thoroughly flushing before installation of the Sprinkler Heads. Otherwise, residues of flux may cause corrosion and leakage in the sprinkler system.

Hydraulic Design Criteria
The minimum required sprinkler flow rates for system designed to NFPA 13D or 13R are given in Table A & Table B as a function of temperature rating and the maximum allowable coverage areas. The sprinkler flow rate is the minimum required discharge from the most hydraulically demanding sprinkler from each of the total number of “design sprinklers” as specified in NFPA 13D or 13R.
For systems designed to NFPA 13, the number of designed sprinklers is to be the four most hydraulically demanding sprinklers. The minimum required discharge from each of the four sprinklers is to be the greater of the followings;

- The flow rates given in Table A for NFPA 13D and 13R as a function of temperature rating and maximum allowable coverage area.
- A minimum discharge 0.1GPM/sq.ft. [4.07(L/min)/ sq.m] over the “design area” comprised of the four most hydraulically demanding sprinklers for the actual coverage areas being protected by the four sprinklers.

Continued Overleaf

© 2009 Rapidrop
Rapidrop® is a registered trade mark.
Rapidrop Global Limited
Registered in England No. 5503278

Rapidrop Global
Rutland Business Park, Newark Road, Peterborough, PE1 5WA, United Kingdom
Tel: +44 (0) 1733 847 510 Fax: +44 (0) 1733 553 958
e-mail: rapidrop@rapidrop.com web: www.rapidrop.com

LISTED

Residential Lead Free Flat Concealed Pendent
Model: RC-RES, (SIN/RD206), K-Factor 4.9

TABLE A. NFPA13D & 13R WET PIPE HYDRAULIC DESIGN CRITERIA

Maximum Coverage Area[a] ft. × ft. (m × m)	Temperature Rating: 162°F (72°C) Sprinkler with 140°F (60°C) Cover Plate					
	Spacing (Between the Sprinklers)		Minimum Flow[b] and Residual Pressure for Horizontal Ceiling (Max. 2 inch Rise for 12 inch Run)		Minimum Flow[b] and Residual Pressure for Sloped Ceiling (Max. 8 inch Rise for 12 inch Run)	
	MAXIMUM	MINIMUM	FLOW	PRESSURE	FLOW	PRESSURE
12 × 12 (3.7 × 3.7)	12 ft. (3.7 m)	9 ft. (2.7m)	13GPM (49.2LPM)	7.0psi (0.050MPa)	13GPM (49.2LPM)	7.0psi (0.050MPa)
14 × 14 (4.3 × 4.3)	14 ft. (4.3 m)		13GPM (49.2LPM)	7.0psi (0.050MPa)	13GPM (49.2LPM)	7.0psi (0.050MPa)
16 × 16 (4.9 × 4.9)	16 ft. (4.9 m)		13GPM (49.2LPM)	7.0psi (0.050MPa)	13GPM (49.2LPM)	7.0psi (0.050MPa)
18 × 18 (5.5 × 5.5)	18 ft. (5.5 m)		18GPM (68.1LPM)	13.5psi (0.093MPa)	[See (c) & (d)]	[See (c) & (d)]
20 × 20 (6.1 × 6.1)	20 ft. (6.1 m)		21GPM (79.5LPM)	18.4psi (0.127MPa)	[See (c) & (d)]	[See (c) & (d)]

TABLE B. NFPA13D & 13R WET PIPE HYDRAULIC DESIGN CRITERIA

Maximum Coverage Area[a] ft. × ft. (m × m)	Temperature Rating: 175°F (79°C) Sprinkler with 162°F (72°C) Cover Plate			
	Spacing (Between the Sprinklers)		Minimum Flow[b] and Residual Pressure for Horizontal Ceiling (Max. 2 inch Rise for 12 inch Run)	
	MAXIMUM	MINIMUM	FLOW	PRESSURE
12 × 12 (3.7 × 3.7)	12 ft. (3.7 m)	9 ft. (2.7m)	13GPM (49.2LPM)	7.0psi (0.050MPa)
14 × 14 (4.3 × 4.3)	14 ft. (4.3 m)		14GPM (53.0LPM)	8.2psi (0.057MPa)
16 × 16 (4.9 × 4.9)	16 ft. (4.9 m)		14GPM (53.0LPM)	8.2psi (0.057MPa)

(a) For coverage area dimensions less than the above mentioned, it needs to use the minimum required flow for the Next Higher Coverage Area listed.

(b) Requirement is based on minimum flow in GPM/LPM from each sprinkler. The associated residual pressures are calculated using the nominal K-Factor. Refer to Hydraulic Design Criteria Section for details.

(c) A Tentative Interim Amendment (TIA No.1028R) to the 2010 edition of NFPA 13D allows Horizontal Ceiling criteria to be used for certain Sloped Ceiling configurations up to 8/12 pitch.

(d) For NFPA 13R applications, Horizontal Ceiling criteria may be used for sloped ceiling configurations up to 8/12 pitch when acceptable to the Local Authority Having Jurisdiction.

Continued Overleaf

© 2009 Rapidrop
Rapidrop® is a registered trade mark.
Rapidrop Global Limited
Registered in England No. 5503278

Rapidrop Global
Rutland Business Park, Newark Road, Peterborough, PE1 5WA, United Kingdom
Tel: +44 (0) 1733 847 510 Fax: +44 (0) 1733 553 958
e-mail: rapidrop@rapidrop.com web: www.rapidrop.com

UL LISTED

Residential Lead Free Flat Concealed Pendent
Model: RC-RES, (SIN/RD206), K-Factor 4.9

Sprinkler Spacing Criteria

The minimum spacing between sprinklers is 9 feet (2.7m). The maximum spacing between sprinklers cannot go beyond the coverage area calculated by using the specific hydraulic factors. (Ref. Table A,B)

Installation

The Model RC-RES must be installed in accordance with the following instructions.
NOTES
Do not use any sprinklers which have been subjected to potential mechanical damage. Do not use any sprinklers which show deformation or cracking in either the Sprinkler or the Protective Cap.
Prior to installation, sprinklers should be maintained in the original cartons and packaging until used to minimize the potential for damage to sprinklers that would cause improper operation or non-operation.
The Protective Cap must remain on the sprinkler during installation and until the ceiling installation is completed. The Protective Cap must be removed to place the sprinkler in service.
Use a torque of 7 to 14 ft.lbs (9.5 to 19.0Nm) to achieve a 1/2 inch NPT sprinkler joint. A maximum of 21 ft.lbs. (28.5 Nm) of torque is to be used to install sprinklers. If you exceed the recommended maximum torque, this could result in damage to the sprinkler inlet, which may lead to leakage from the sprinkler.
In case of insufficient adjustment in Cover Plate installation, do not try to overly tighten, screw the sprinkler too loosely or make any modification to the cover plate assembly. Readjust the sprinkler fitting for a better fit.
Installing Procedure
Step 1
The installation requirements for the sprinkler are as follows: to be installed only in the pendent position with the waterway perpendicular to the ceiling. Install the sprinkler fitting so that the distance from the face of the fitting to the mounting surface will be nominally 2 inch (50.8mm) as shown in Figure 3.
Step 2
With pipe thread sealant applied to the threads, hand tighten the sprinkler into the sprinkler fitting. Then tighten it with the Sprinkler Socket or Wrench & Socket Combination (Ref. Figure 4). The grooves of the Socket must fit perfectly with the grooves on the Sprinkler for proper installation (Ref. Figure 4).
Step 3
If desired the Protective Cap may also be used to locate the center of the clearance hole by gently pushing the ceiling material against the center point of the Protective Cap. Before the installation of the ceiling, the sprinkler installation can be started with the 2-3/8 inch (60mm) diameter clearance hole (Ref. Figure 3). Use the "Tolerance Limit of Ceiling Level" indicator on the Protective Cap to check for proper installation height (Ref. Figure 3).

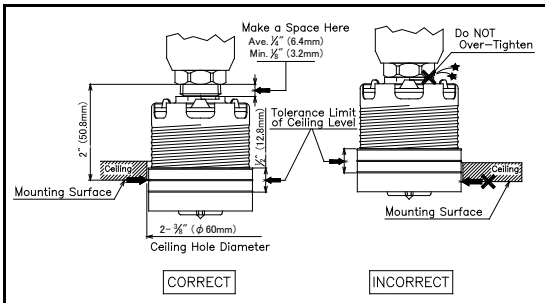

FIGURE 3. INSTALLATION

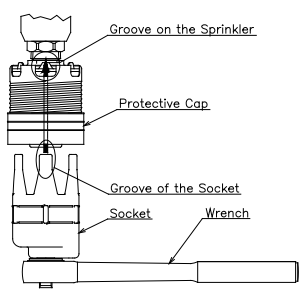

FIGURE 4

Step 4
Use the Cap Remover RC to remove the Protective Cap (Ref. Figure 5), and then push or screw a Cover Plate Assembly on the Cup of the Sprinkler by hand until its flange just comes in contact with the ceiling (Ref. Figure 6 and Figure 7). Stop tightening the Cover Plate Assembly once the flange has come in contact with the ceiling. If the ceiling has been lifted from its normal position in the process of tightening of the Cover Plate Assembly, readjust the cover plate assembly as necessary. If the flange of the Cover Plate Assembly cannot come in contact with the ceiling sufficiently, readjust the sprinkler fitting as necessary. When properly installed, there is a nominal 1/16 inch (1.6mm) air gap between the lip of the Cover Plate and the ceiling, as shown in Figure 6.

Care and Maintanance

The following instructions must be implemented for the maintenance and service of the Model RC-RES.
NOTES
Wet pipe sprinkler systems must be maintained at a minimum temperature of 40ºF/4ºC to prevent freezing and bursting of the pipe and/or sprinklers.
Automatic sprinklers are not to be tested with a heat source. Operation of the heat responsive element can result.
Absence of a Cover Plate Assembly may delay the response time of the sprinkler in case of fire.
Install the cover plate assembly properly, as shown in Figure 6. Improper installation of the cover plate assembly may cause improper operation or non-operation.

Continued Overleaf

© 2009 Rapidrop
Rapidrop® is a registered trade mark.
Rapidrop Global Limited
Registered in England No. 5503278

Rapidrop Global
Rutland Business Park, Newark Road, Peterborough, PE1 5WA, United Kingdom
Tel: +44 (0) 1733 847 510 Fax: +44 (0) 1733 553 958
e-mail: rapidrop@rapidrop.com web: www.rapidrop.com

LISTED

Residential Lead Free Flat Concealed Pendent
Model: RC-RES, (SIN/RD206), K-Factor 4.9

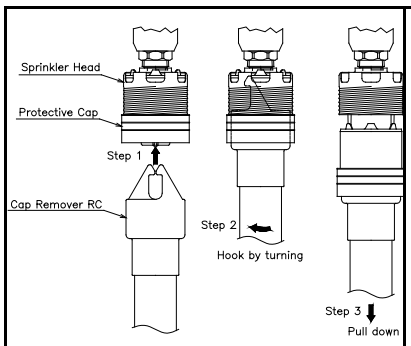

FIGURE 5. PROTECTIVE CAP REMOVAL

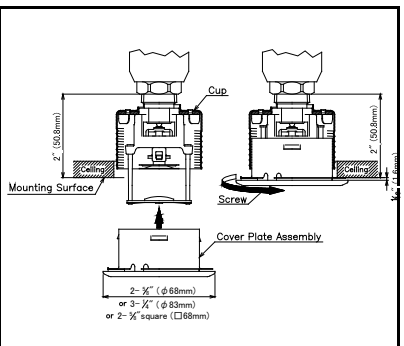

FIGURE 6

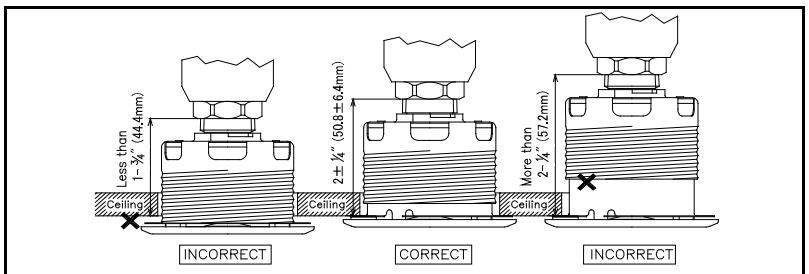

FIGURE 7. INSTALLATION (CORRECT OR INCORRECT)

If the ceiling is to be repainted after the installation of the Sprinkler, care must be exercised to ensure that the new paint does not seal off any of the air gap. Factory painted Cover Plates must not be repainted. They should be replaced, if necessary, by factory painted cover plates. Non-factory applied paint may adversely delay or prevent sprinkler operation in case of a fire.
Do not pull the Cover Plate. Separation may result.
In preparation for maintenance of the fire protection system, permission to close the main control valve must be obtained from the proper authorities and all affected by this action parties must be informed before the maintenance session can commence.
Do NOT enclose any sprinklers within drapes, curtains, or valances.
Do NOT hang anything from the sprinklers.
Do NOT clean the sprinklers with soap and water, detergents, ammonia, cleaning fluids, or other chemicals. Remove dust, lint, cobwebs, cocoons, insects, and larvae by gently brushing with a feather duster or gently vacuuming with a soft bristle (i.e., dusting) brush attachment.
Exercise suitable safety precautions in the use and storage of highly flammable materials. The rapid rate of fire development and spread of these materials can reduce the ability of the sprinkler systems to aid in the control of a fire involving such hazards.

Leaking or corroded sprinklers must be replaced.
Automatic Sprinklers must never be shipped or stored where the temperature exceeds 100ºF/38ºC
Automatic sprinkler must never be physically altered, such as painted, plated, or coated, once shipped from the factory. If the sprinklers have been in any way modified, they must be replaced.
Great caution must be applied to prevent damage to the sprinklers at all stages - before, during, and after installation. Damaged units, as a result of dropping, hitting, over-tightening, or wrench slippage, must be replaced.
The Model RC-RES must only be replaced with pendent sprinklers which are listed for residential fire protection service and which have the same nominal K-Factor, the same coverage area, and the same or lower flow ratings (as indicated under Table A "Hydraulic Design Criteria").
When remodeling, such as by adding false beams or light fixtures or changing the location of compartment walls, first verity that the new construction will not violate the installation requirements of the applicable standards of NFPA. Alter the new construction and/or the sprinkler system to suit the requirements of this document and the applicable NFPA regulations.
The owner is responsible for the maintenance of the sprinkler system, including inspection and testing, its compliance with this documents, as well as the standards of the National Fire Protection Association (e.g., NFPA 25), and the regulations of any other authorities having jurisdiction. The owner should direct any questions regarding the above rules and regulations to the installing contractors or the sprinkler manufacturer. It is recommended that automatic sprinkler systems be inspected, tested, and maintained by a qualified Inspection Service in accordance with NFPA 25.

Order Procedure

When placing an order, please contact a local distributor with the following information (Model Name, Specify, Temp. and Finish).
Sprinkler:
Model: RC-RES
(RD206, Residential Flat Concealed Sprinkler, Pendent, K4.9, Temperature: 162⊠ (72⊠) or 175⊠ (79⊠))
Cover Plate Assembly:
2-5/8 inch (φ68mm) or 3-1/4 inch (φ83mm) or 2-5/8 inch square (□68mm), Order Separately from Sprinkler

Finish	White Painted	Ivory Painted	Nickel Plated	Any Colour Painted*1
140°F (60°C) Cover Plate for RC-RES 162°F or 162°F (72°C) Cover Plate for RC-RES 175°F	○	○	○	○

*1: Choose one colour of our acceptable colour list. Regarding the colour list information, please contact a local distributor.
Tools for Installation of Model: RC-RES
- Socket for Model RC-RES
- Wrench & Socket for Model RC-RES
- Cap Remover RC

Continued Overleaf

© 2009 Rapidrop
Rapidrop® is a registered trade mark.
Rapidrop Global Limited
Registered in England No. 5503278

Rapidrop Global
Rutland Business Park, Newark Road, Peterborough, PE1 5WA, United Kingdom
Tel: +44 (0) 1733 847 510 Fax: +44 (0) 1733 553 958
e-mail: rapidrop@rapidrop.com web: www.rapidrop.com

LISTED