cycle-works.com

Cycle-Works

Solent Shelter Range

20 bike Solent compound

Two 10 bike Solent shelters

open / gated / compound / higher

Hot-dipped galvanized steel	✓
Powder coated	✓
5mm PETG UV2 roof panels	✓
5mm PETG UV2 end panels	✓
Rear panel cloaking	✓
Rounded A cycle racks	✓
Delivery	✓
Installation	✓
5 year limited warranty	✓

The modern and stylish Solent shelter has proved very popular with schools, councils and employers as it combines a sleek rounded design with affordable prices. The bikes are protected from the elements on three sides, and gates and covered walkways can be added to form this shelter into a lockable shelter or compound.

We have taken our time and used our 17 years experience to select the best components for the Solent range, we offer many standard features that are simply not available form other suppliers. As standard all of our solent shelters and compounds come fully galvanised and powder coated in any standard RAL colour.

Also Included is thick 5mm PETG UV roof and end panels, PETG is a far superior material to the normal PET that is used on most shelters. PETG UV keeps it's impact strength for at least 10 years. PET loses approximately 80% of it's strength after the first 12 months.

before

after

Court Lane Primary School, Portsmouth

Cycle-Works worked with Court Lane Primary to come up with the best salutation for a Solent compound enclosure that also integrated with some of the building.

Cycle-Works Ltd
The Cycle Storage Specialists
cycle-works.com • 023 9281 5555

cycle-works.com

Solent Shelter Range

A modern versatile shelter that suites any location and any number of bikes.

We also include rear cloaking panels as standard. Cloaking improves the overall finish of the shelter and increases the durability. The cloaking panels are colour matched to the framework and seal the panels providing greater weather protection.

In addition, we have replaced the common Sheffield stand with our popular Rounded A racks, as these offer better security than standard racks thanks to the addition of a security bar. The rounded design is more elegant and takes up less space when not in use.

To finish off the package we have included delivery and installation so there are no nasty surprises to get added on at the end of the purchase. Finally we include a 5 year limited warranty on all our shelters.

40 bike Solent compound with electronic access

28 bike Higher Solent shelter with Josta 2-tier racks

20 bike Solent shelter with swing gates

10 bike Solent shelter with sliding gates

Two 10 bike Solent open access shelters

Cycle-Works Ltd
The Cycle Storage Specialists
cycle-works.com • 023 9281 5555

Solent Shelter Range

Materials & finishes

Hot-dipped galvanised (HDG) Steel & powder coated

HDG is the process of dipping fabricated steel into a vat containing molten zinc. While the steel is in the vat, the iron in the steel metallurgically reacts with the molten zinc to form a tightly-bonded alloy coating that provides superior corrosion protection to steel.

HDG can contribute positively to sustainable development initiatives because of its maintenance-free longevity, 100% recyclable, minimal environmental impact, and economic savings for future generations.

The finished powder coating protects both the steel part and the galvanised layer, and provides an attractive exterior finish to the part and add to the life of the metal.

Rear Panel Cloaking

Panel clocking is where a strip of HDG Steel, that is powder coated to match the rest of the shelter, is placed over the small gap between the rear roof panels. This strip means the rear exposed panel joins will be protected and this seal will offer greater weather protection.

Also, because the join is protected from the elements this adds to the over all durability of the sheet edge and the fixing points. The clocking panel also adds to the overall look of the shelter, giving it a smart and aesthetically pleasing finish to the sheet edge/join

5mm PETG UV2 roof and end panels

At Cycle-Works we only use PETG UV2 as it's been proven to be the best product on the market for shelter panelling. It offers excellent impact resistance and has an extremely long product life thanks to its 2-sided co-extrusion layer with UV-protection.

PETG UV2 has been rigorously tested in the harsh conditions of the Arizona desert. It showed very little loss of strength over the 24 month testing period compared to standard PET which lost almost all of its strength. In the same testing period there were no visible signs of yellowing to the PETG UV2 as well.

Why we use PETG UV over Polycarbonate

- PETG UV has the same fire rating as Polycarbonate
- PETG UV can be repaired when light scratches and scuffs occur, Polycarbonate will not repair
- PETG UV is still cheaper than Polycarbonate
- PETG UV has 2 external UV layers giving total UV protection against degradation and yellowing.

Why we use PETG UV over PET?

- PETG UV has a higher impact strength than PET
- PETG UV can be repaired when light scratches and scuffs occur, PET will not repair
- PETG UV keeps it's impact strength for at least 10 yrs. PET loses approx. 80% of it's strength after the first 12 months.

Cycle-Works Ltd
The Cycle Storage Specialists
cycle-works.com • 023 9281 5555

cycle-works.com

Solent Shelter Range

4m long Solent open access shelter in 5 hoop toast rack

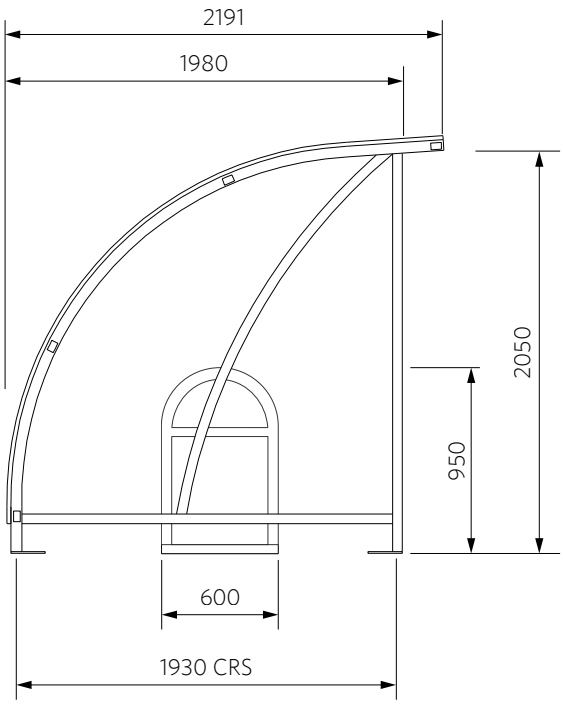

SIDE ELEVATION

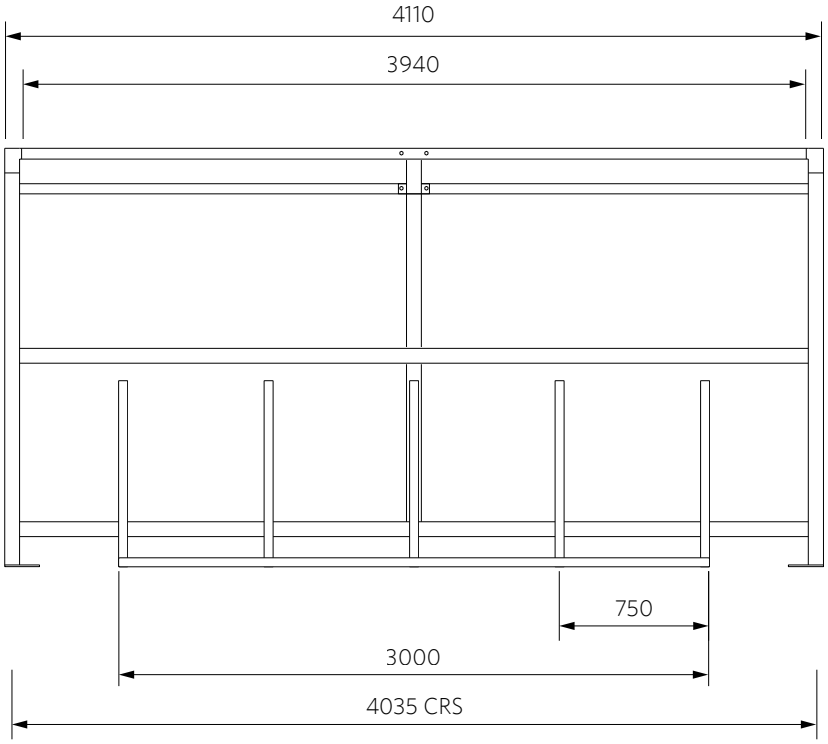

FRONT ELEVATION

Dimensions & capacity

Each 10-bike module has the following dimensions:

Height: 2050mm

Width: 2200mm

Length: 4100mm for every 5 racks (10 bike spaces)

5000m shelters & customised dimensions are also available.

The smallest shelter parks 10 bicycles.

Foundations for full concrete base 10 bike Solent Shelter

Dimensions: 4.5m x 2.5m

Depth: 100mm C35 concrete, with 100mm sub-base & mesh reinforcement on top of the sub-base.

Dimensions for concrete pads

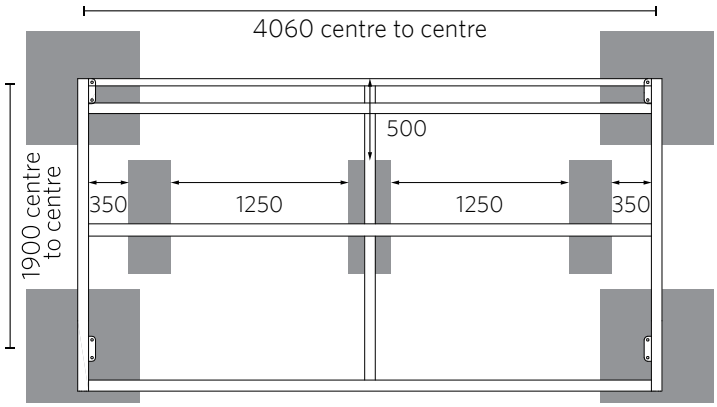

Shelter front

Large blocks for shelters: 800mm x 800mm, 300mm deep

Smaller blocks for racks: 800mm x 300mm, 150mm deep

Cycle-Works Ltd
The Cycle Storage Specialists
cycle-works.com • 023 9281 5555

Solent Shelter Range

Electronic access

At Cycle-Works, we believe that the future for many sites is electronic access, as it overcomes many of the issues with traditional cycle parking. We offer a wide range of electronic assess options and most of our lockable shelters and compounds can be fitted with access control systems.

Shelters and compounds can be with either stand-alone IT systems or linked into an existing access system, e.g. Universitys or hospital access system. Shelters and compounds can also be linked to various existing payment and identification mechanisms.

BREEAM

As with all our lockers, shelters, compounds and racks they can be used to help demonstrate compliance with BREEAM and achieve a high BREEAM rating when used in an appropriate situation.

more info

Code for Sustainable Homes

As with all our lockers, shelters, compounds and racks they can be used to help contribute towards gaining your 2 ENE8 Cycle Storage Credits when used in an appropriate situation, under the Code for Sustainable Homes.

more info

Cycle-Works Ltd
The Cycle Storage Specialists
cycle-works.com • 023 9281 5555