8 Centre of gravity

8 - 1 Centre of Gravity

REMQ14,16P8

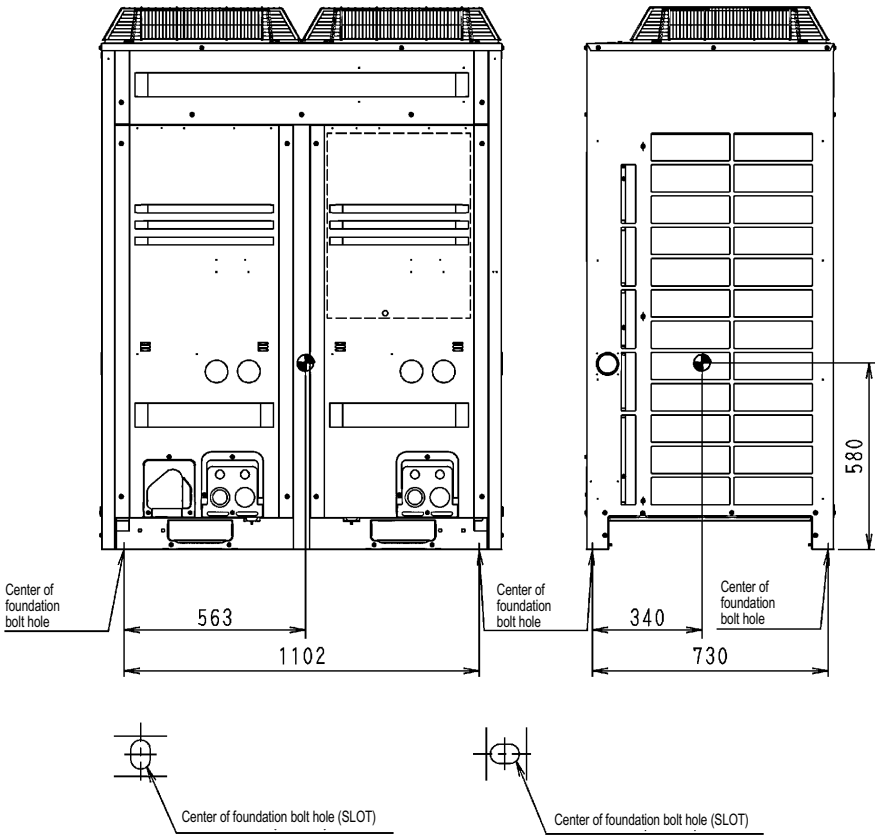

4D057578C

REYQ8,12P9
REYQ10P8

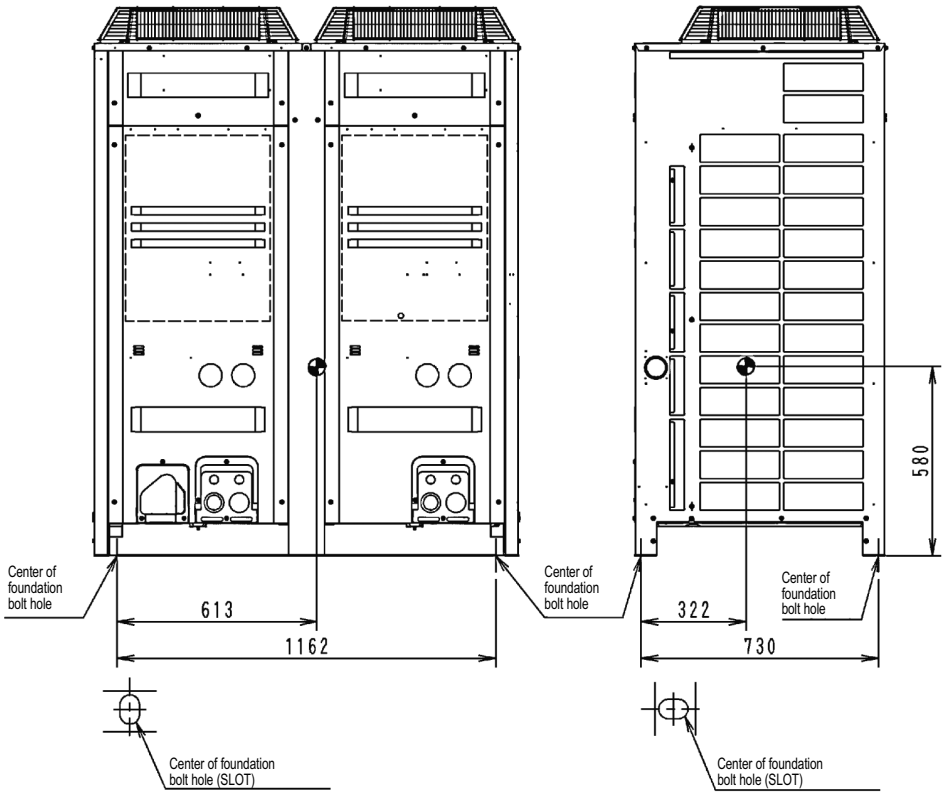

4D058152A

8 Centre of gravity

8 - 1 Centre of Gravity

REYQ14,16P8

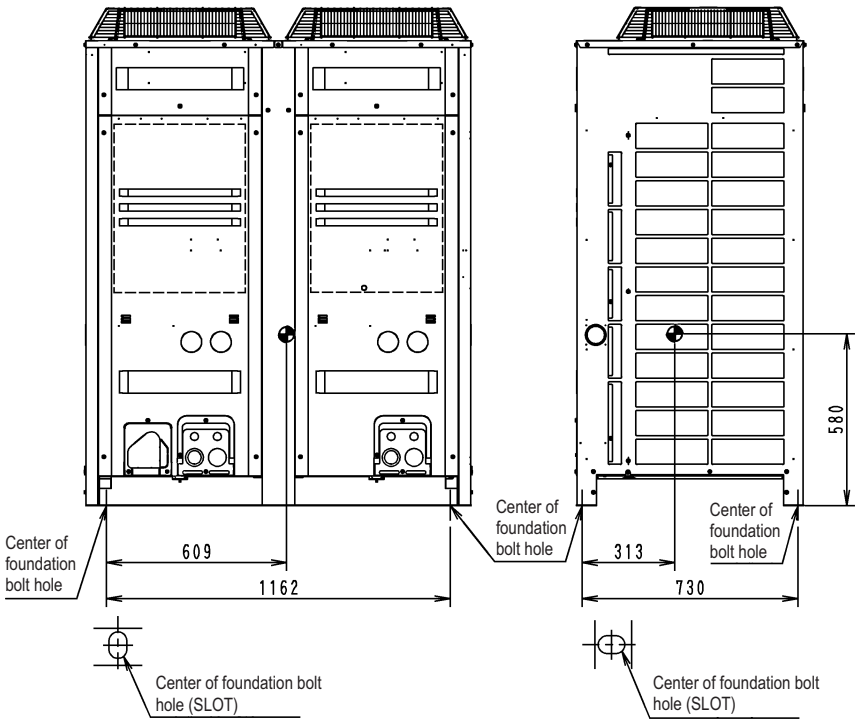

4D057739B

9 Piping diagrams

9 - 1 Piping Diagrams

REMQ8P9

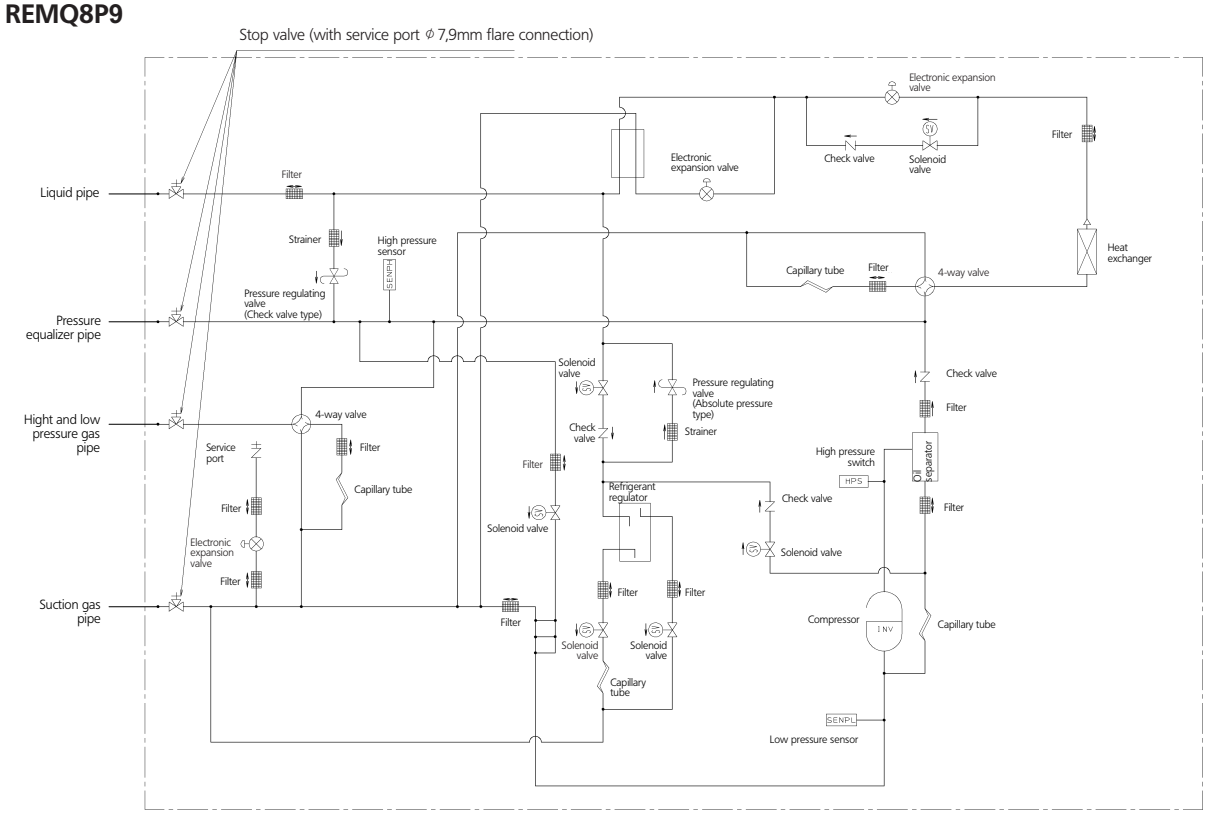

3D057743

REMQ10,12P8

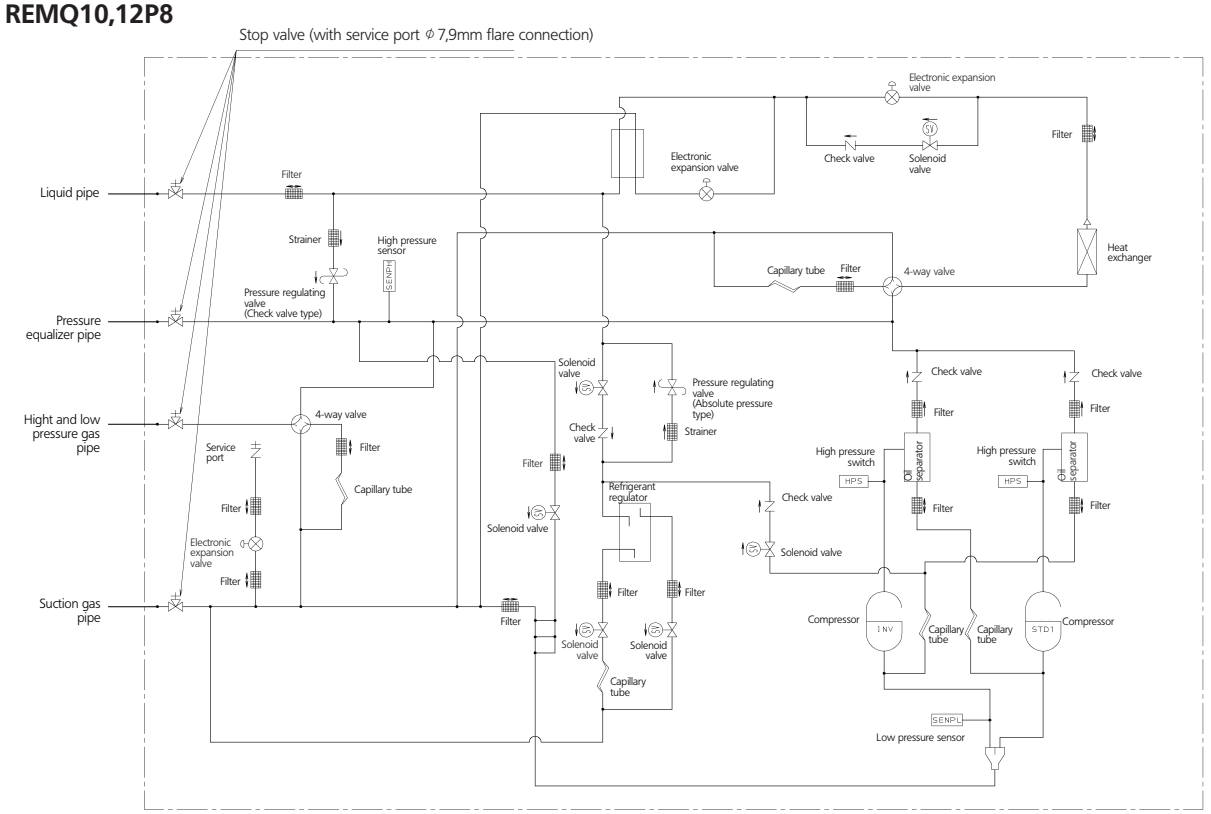

3D057742

9 Piping diagrams

9 - 1 Piping Diagrams

REMQ14,16P8

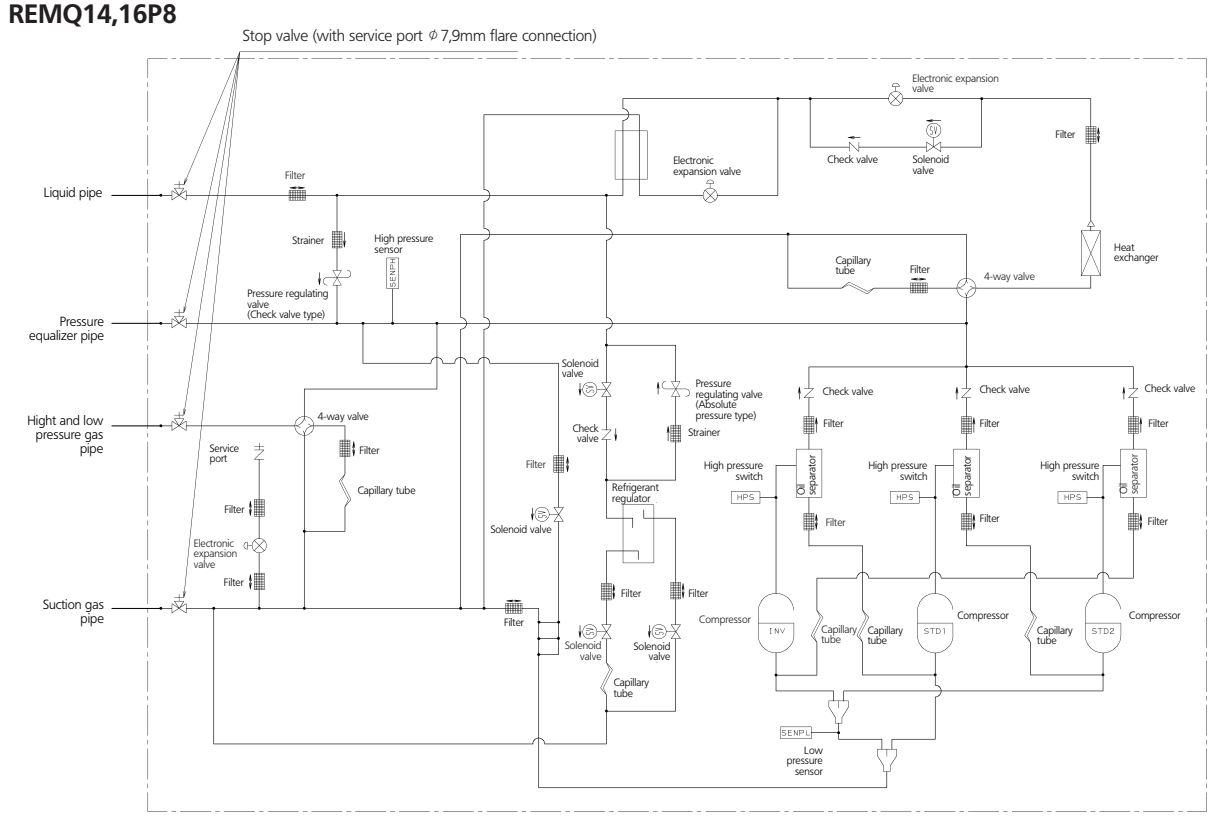

3D057741

REYQ8,12P9
REYQ10P8

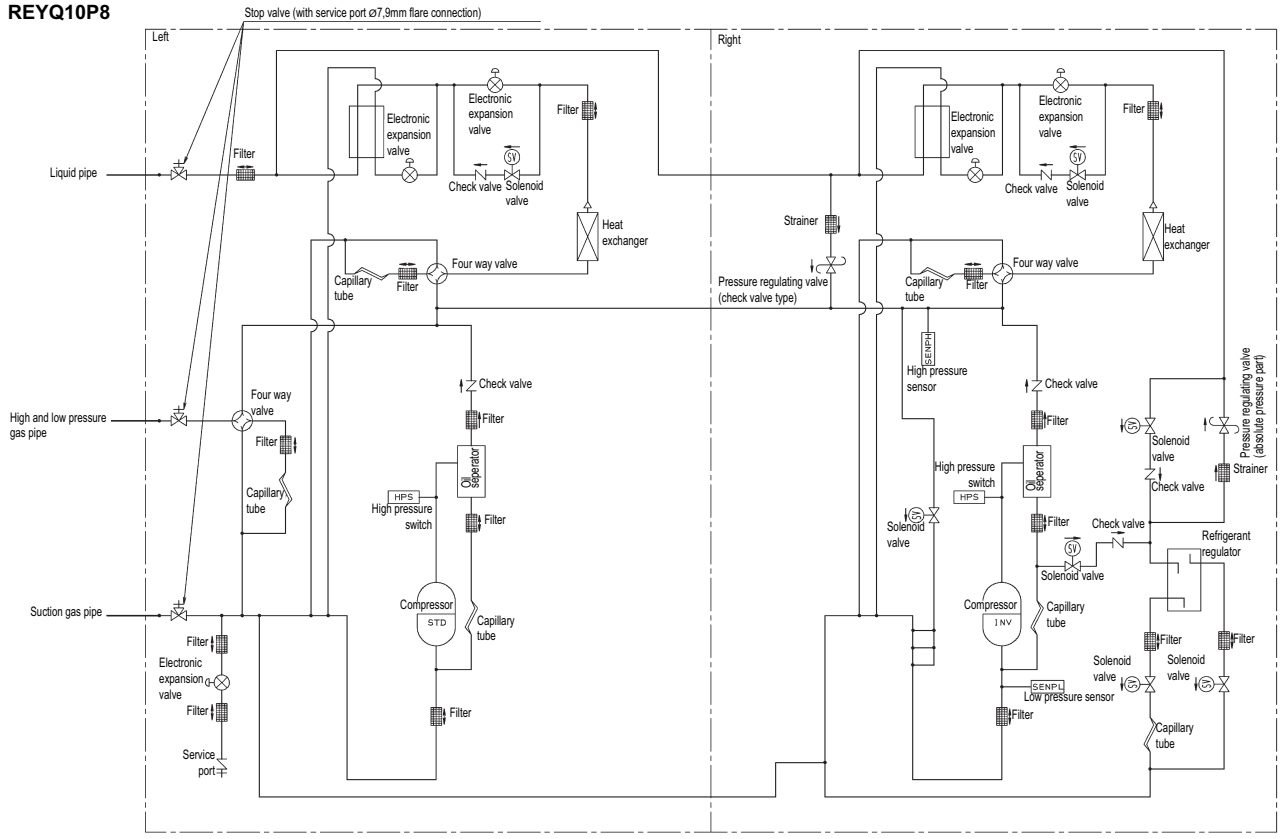

3D058154B

9 Piping diagrams

9 - 1 Piping Diagrams

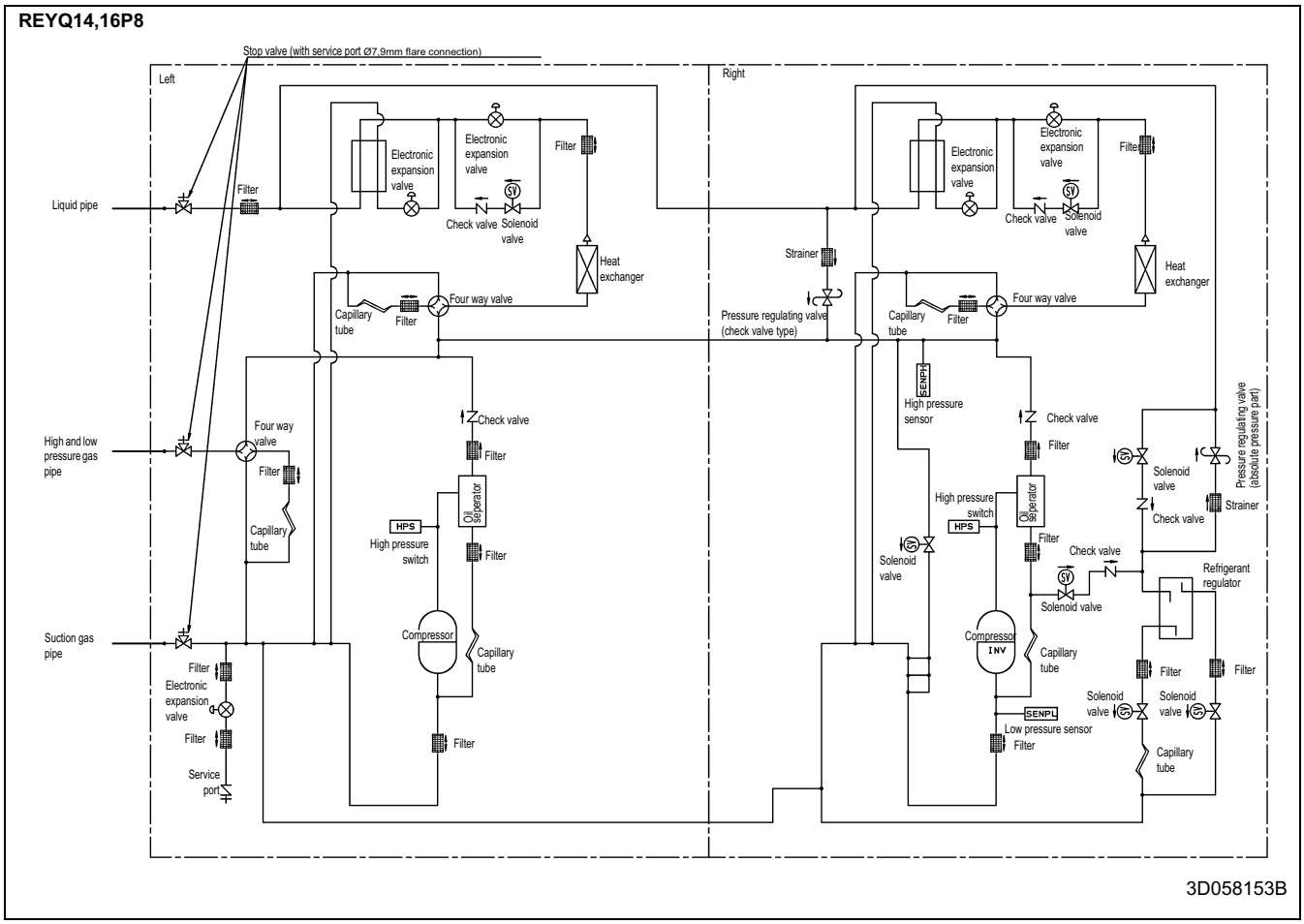

10 Wiring diagrams

10 - 1 Wiring Diagrams - Single Phase

REMQ8P9

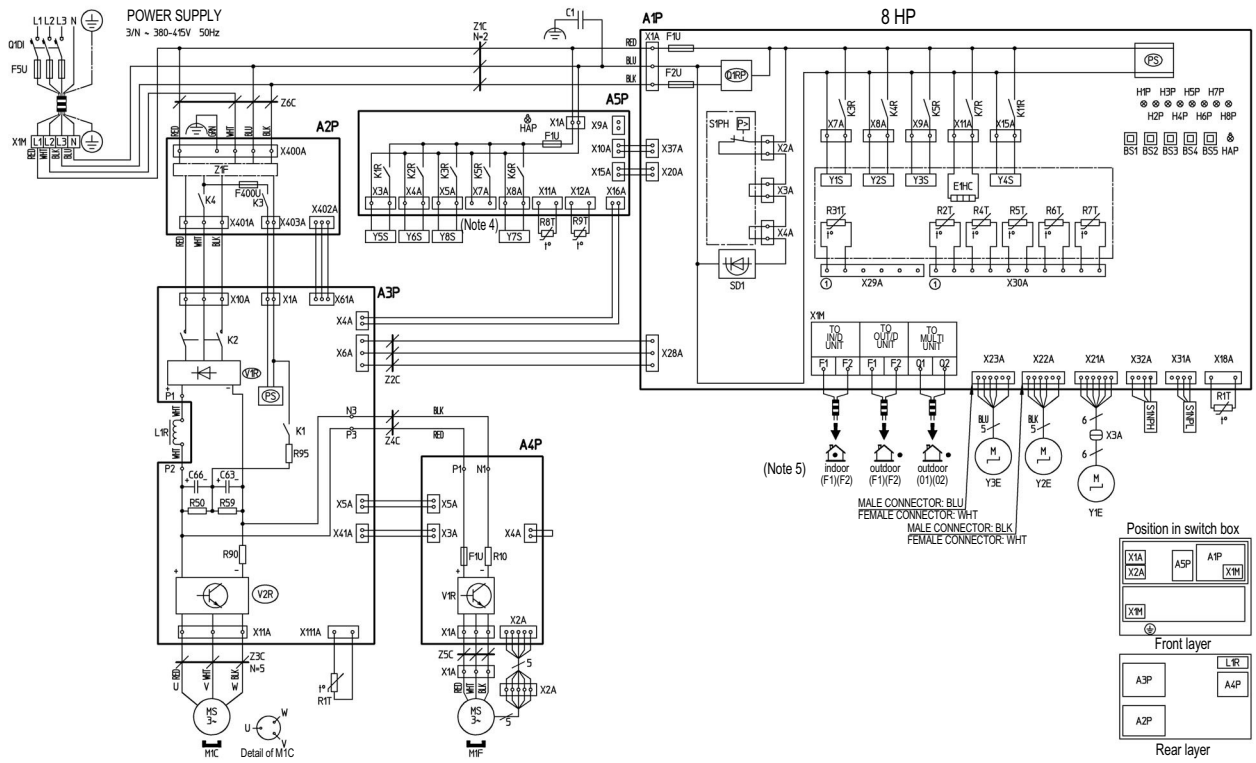

Indoor unit	Printed circuit board			Magnetic relay		S1NPH	Pressure sensor (High)	
A1P~A8P	A1P: Main	A4P,A8P: Fan	K1R~K11R	K1R: Y5S (A1P)	K2R: Y6S (A5P)	S1NPL	Pressure sensor (Low)	
	A2P: Noise filter	A5P: Sub		K3R: Y1S (A1P)	K3R: Y1S (A5P)	S1PH	Pressure switch (High)	
	A3P: Inverter			K4R: Y2S (A1P)	K5R: Y3S (A1P)	SD1	Safety devices input	
BS1~BS5	Push button switch (Mode, Set, Return, Test, Reset)			K5R: (For option) (A5P)	K6R: Y7S (A5P)	V1R	Diode bridge (A3P)	Power module (A4P)
				K7R: E1HC (A1P)	K11R: Y4S (A1P)	V2R	Power module (A3P)	
C1, C63, C66	Capacitor		L1R	Reactor		X1A~X4A	Connector (M1F)	
E1HC	Crankcase heater		M1C	Motor (Compressor)		X3A	Connector (Y1E)	
F1U, F2U	Fuse (T, 3.15A, 250V) (A1P)		M1F	Motor (Fan)		X1M	Terminal strip (Power supply)	
F1U	Fuse (T, 3.15A, 250V) (A5P)		PS	Switching power supply (A1P, A3P)		X1M	Terminal strip (Control) (A1P)	
F1U	Fuse (8A, DC650V) (A4P)		Q1DI	Earth leakage breaker		Y1E	Electronic expansion valve (Main)	
F5U	Field fuse		Q1RP	Reverse phase detection circuit		Y2E	Electronic expansion valve (Charge)	
F400U	Fuse (T, 63A, 250V) (A2P)		R10	Resistor (current sensor) (A4P)		Y3E	Electronic expansion valve (Subcool)	
H1P~H8P	Pilotlamp (service monitor -orange) [H2P] Prepare, Test - - - - - - - - - Flickering Malfunction detection - - - - - - Light up		R50, R59	Resistor		Y1S~Y3S	Solenoid valve	
			R90	Resistor (current sensor)			Y1S: RMTG	Y2S: 4 way valve (pipe)
			R95	Resistor (current limiting)			Y3S: 4 way valve (H/E Gas)	
HAP	Pilotlamp (service monitor - green) (A1P)(A5P)		R1T~R9T R31T~R33T	Thermistor			Y4S: RMTL	Y5S: Hot gas
K1~K4	K1: Magnetic relay	K2: Magnetic contactor (M1C)		R1T: Air (A1P)	R6T: Sub cool H/E liq		Y6S: EV bypass	Y7S: RMTO
	K3: Magnetic relay	K4: Magnetic contactor (M1C)		R1T: Fin (A3P)	R7T: H/E Liquid		Y8S: RMTT	
Connector for optional parts				R2T: H/E Gas	R8T: Suction	Z1C~Z6C	Noise filter (ferrite core)	
X7A	Operation output (A5P)			R4T: H/E Deicer	R9T: Liquid	Z1F	Noise filter (with surge absorber)	
X9A	Power supply (ADAPTER) (A5P)			R5T: Sub cool H/E gas	R31T: M1C Discharge			

	: Terminal strip	Colors:	BLK:	Black	PNK:	Pink	ORG:	Orange
	: Field wiring		RED:	Red	BRN:	Brown	BLU:	Blue
	: Connector		YLW:	Yellow	GRY:	Grey		
	: Terminal		WHT:	White	GRN:	Green		
	: Protective earth (screw)							

2TW29116-1A

NOTES

1 When using the option adaptor, refer to the installation manual

2 Refer to the installation manual, for connection wiring to indoor-outdoor transmission F1 - F2, outdoor transmission F1 - F2, outdoor-multi transmission Q1 - Q2 and on how to use BS1~BS5 and DS1, DS2 switch.

3 Do not operate the unit by short-circuiting protection device S1PH~S3PH

10 Wiring diagrams

10 - 1 Wiring Diagrams - Single Phase

REMQ10,12P8

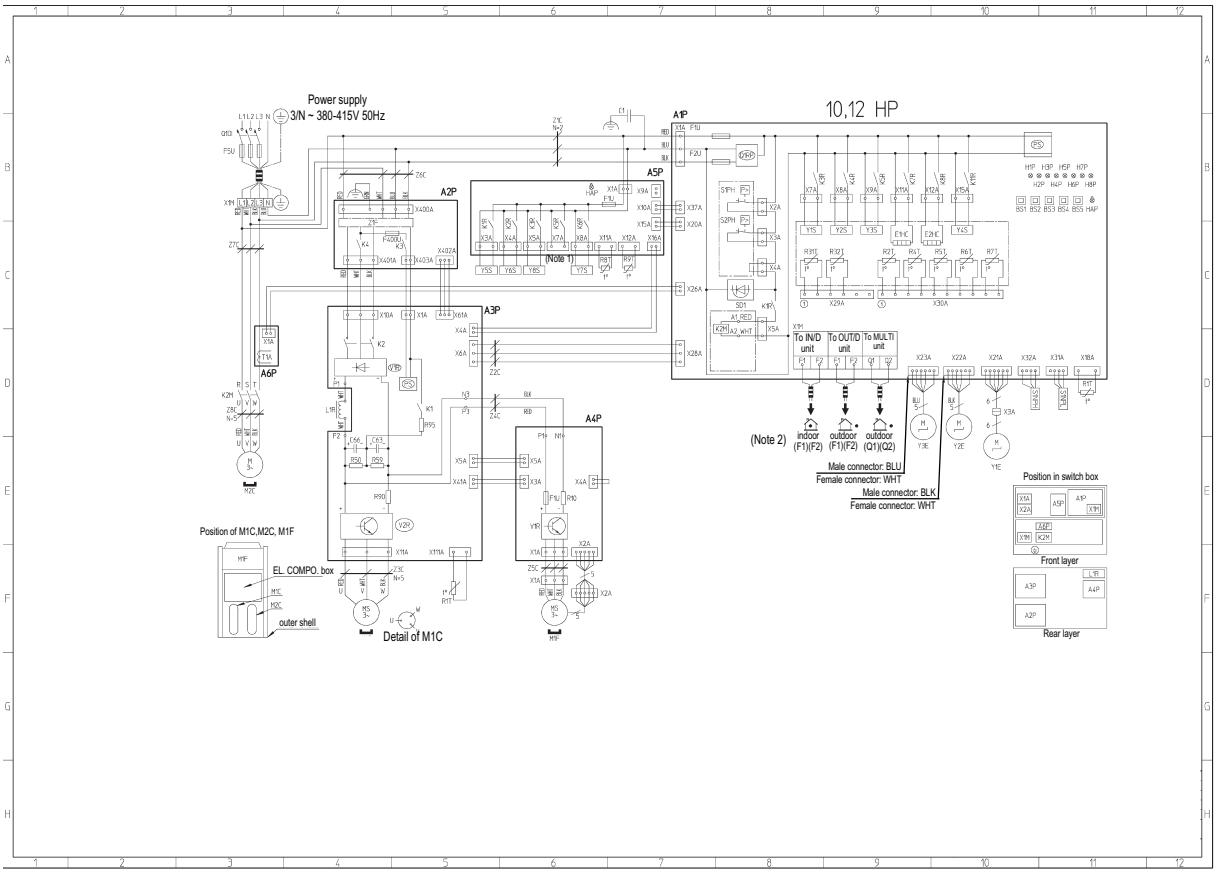

A1P~A8P	Printed circuit board		L1R	Reactor		X1M	Terminal strip (control) (A1P)
	A1P: main	A4P: fan	M1C, M2C	Motor (compressor)		Y1E	Electronic expansion valve (main)
	A2P: noise filter	A5P: sub	M1F	Motor (fan)		Y2E	Electronic expansion valve (charge)
	A3P: inverter	A6P: current sensor	PS	Switching power supply (A1P, A3P)		Y3E	Electronic expansion valve (subcool)
BS1~BS5	Push button switch		Q1DI	Earth leakage breaker		Y1S~Y3S	Solenoid valve
	(Mode, set, return, test, reset)		Q1RP	Reverse phase detection circuit			Y1S: RMTG / Y2S: 4 way vvalve (pipe)
C1, C63, C66	Capacitor		R10	Resistor (current sensor) (A4P)			Y3S: 4 way valve (H/E gas)
E1HC, E2HC	Crankcase Heater		R50, R59	Resistor			Y4S: RMTL / Y5S: hot gas
F1U, F2U	Fuse (T, 3.15A, 250V) (A1P)		R90	Resistor (current sensor)			Y6S: EV bypass / Y7S: RMTO
F1U	Fuse (T, 3.15A, 250V) (A5P)		R95	Resistor (current limiting)			Y8S: RMTT
F5U	Field fuse		R1T~R9T R31T~R33T	Thermistor		Z1C~Z8C	Noise filter (ferrite core)
F400U	Fuse (T, 6.3A, 250V) (A2P)			R1T: air (A1P)	R4T: H/E deicer	Z1F	Noise filter (with surge absorber)
H1P~H8P	Pilotlamp (service monitor - orange)			R1T: fin (A3P)	R5T: sub cool H/E gas		
	[H2P] Prepare, test - - - - - - - - flickering			R2T: H/E gas	R8T: sub cool H/E liq	Connector for optional parts	
	Malfunction detection - - light up			R31T: M1C discharge	R8T: suction	X7A	Operation output (A5P)
HAP	Pilotlamp (service monitor - green (A1P)(A5P)				R9T: liquid	X9A	Power supply (adapter) (A5P)
K1~K4	K1: magnetic relay	K2:magnetic contactor (M1C)	S1NPH	Pressure sensor (high)			
	K3: magnetic relay	K4:magnetic contactor (M1C)	S1NPL	Pressure sensor (low)			
K1R~K11R	Magnetic relay		S1PH, S2PH	Pressure swith (high)			
	K1R: K2M (A1P)	K2R: Y5S (A5P)	T1A	Current sensor			
	K2R: Y6S (A5P)	K3R: Y1S (A1P)	V1R	Diode bridge (A3P)	Power module (A4P)		
	K3R: Y1S (A1P)	K4R: Y2S (A1P)	V2R	Power module (A3P)			
	K5R: Y3S (A1P)	K5R: (for option) (A5P)	X1A, X2A	Connector (M1F)			
	K6R: Y7S (A5P)	K7R: E1HC (A1P)	X3A	Connector (Y1E)			
	K8R: E2HC (A1P)	K11R: Y4S (A1P)	X1M	Terminal strip (power supply)			

	: Field wiring	Colors:	BLK:	Black	PNK:	Pink
	: Terminal Strip		BLU:	Blue	RED:	Red
	: Connector		BRN:	Brown	WHT:	White
	: Terminal		ORG:	Orange	YLW:	Yellow
	: Protective earth (screw)		GRY:	Grey	GRN:	Green

2TW29126-1A

NOTES

1 When using the option adapter, refer to the installation manual.

2 Refer to the installation manual, for connection wiring to indoor-outdoor transmission F1 - F2, outdoor-outdoor transmission F1 - F2, outdoor-multi transmission Q1 - Q2 and on how to use BS1~BS5 and DS1, DS2 switch.

3 Do not operate the unit by short-circuiting protection device S1PH, S2PH.

10 Wiring diagrams

10 - 1 Wiring Diagrams - Single Phase

REMQ14-16P8

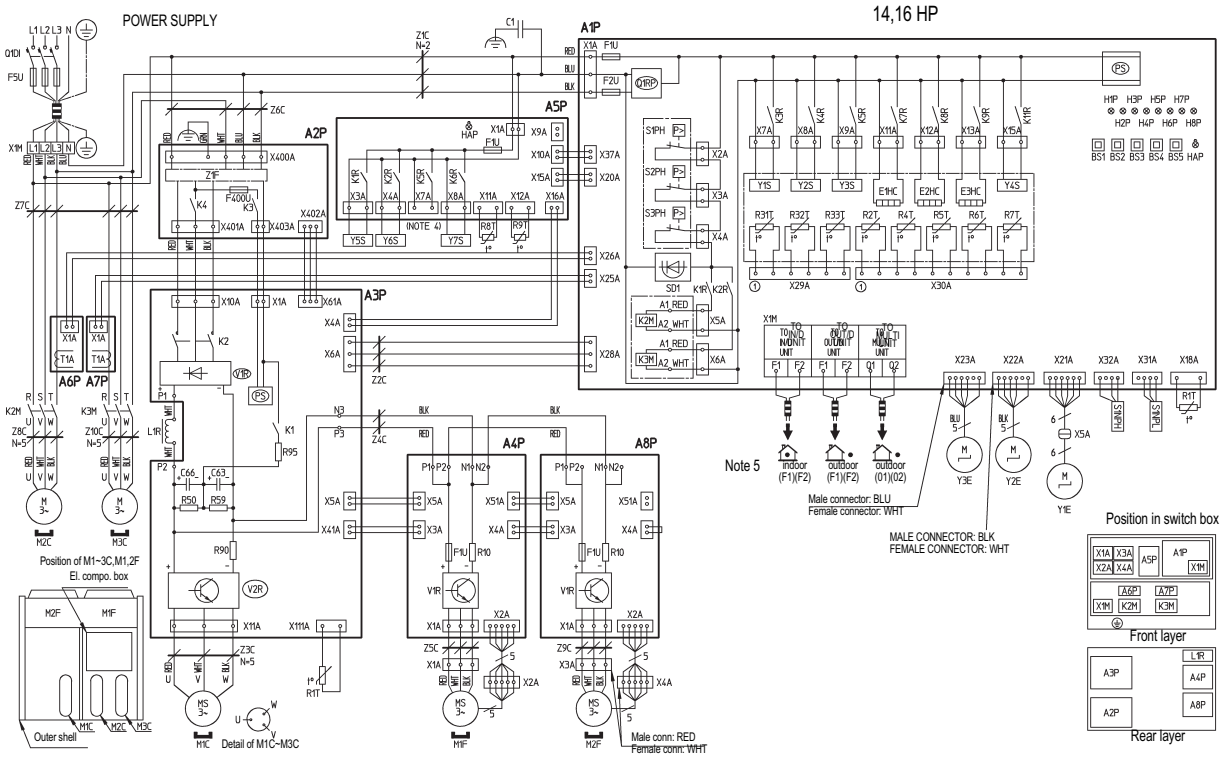

A1P~A8P	Printed circuit board		K1R~K11R	Magnetic relay		S1NPL	Pressure sensor (Low)	
	A1P: Main	A4P,A8P: Fan		K1R: K2M (A1P)	K1R: Y5S (A5P)	S1PH~S3PH	Pressure switch (High)	
	A2P: Noise filter	A5P: Sub		K2R: K3M (A1P)	K2R: Y6S (A5P)	T1A	Current sensor (A6P, A7P)	
	A3P: Inverter	A6P,A7P: Current sensor		K3R: Y1S (A1P)	K4R: Y2S (A1P)	V1R	Diode bridge (A3P)	Power module (A4P,A8P)
BS1~BS5	Push button switch (Mode, Set, Return, Test, Reset)			K5R: Y3S (A1P)	K5R: (for option) (A5P)	V2R	Power module (A3P)	
				K6R: Y7S (A5P)	K7R: E1HC (A1P)	X1A~X4A	Connector (M1F, M2F)	
C1, C63, C66	Capacitor			K8R: E2HC (A1P)	K9R: E3HC (A1P)	X5A	Connector (Y1E)	
E1HC~E3HC	Crankcase heater			K11R: Y4S (A1P)		X1M	Terminal strip (Power supply)	
F1U, F2U	Fuse (T, 3.15A, 250V) (A1P)		PS	Switching power supply (A1P, A3P)		X1M	Terminal strip (Control) (A1P)	
F1U	Fuse (T, 3.15A, 250V) (A5P)		Q1DI	Earth leakage breaker		Y1E	Electronic expansion valve (Main)	
F1U	Fuse (8A, DC650V) (A4P,A8P)		Q1RP	Reverse phase detection circuit		Y2E	Electronic expansion valve (Charge)	
F5U	Field fuse		R10	Resistor (current sensor) (A4P,A8P)		Y3E	Electronic expansion valve (Subcool)	
F400U	Fuse (T, 63A, 250V) (A2P)		R50, R59	Resistor			Solenoid valve	
H1P~H8P	Pilotlamp (service monitor - orange) [H2P] Prepare, Test - - - - - - - - - Flickering Malfunction detection - - - - - - Light up		R90	Resistor (current sensor)		Y1S~Y3S	Y1S: RMTG	Y2S: 4 way valve (pipe)
			R95	Resistor (current limiting)			Y3S: 4 way valve (H/E Gas)	
				Thermistor			Y4S: RMTL	Y5S: Hot gas
HAP	Pilotlamp (service monitor - green) (A1P) (A5P)		R1T~R9T R31T~R33T	R1T: Air (A1P)	R4T: H/E Deicer		Y6S: EV bypass	Y7S: RMTO
K1~K4	K1: Magnetic relay	K2: Magnetic contactor (M1C)		R1T: Fin (A3P)	R5T: Sub cool H/E gas	Z1C~Z10C	Noise filter (ferrite core)	
	K3: Magnetic relay	K4: Magnetic contactor (M1C)		R2T: H/E Gas	R6T: Sub cool H/E liq	Z1F	Noise filter (with surge absorber)	
K2M, K3M	Magnetic contactor (M2C, M3C)			R31T: M1C Discharge	R7T: H/E Liquid			
L1R	Reactor			R32T: M2C Discharge	R8T: Suction	Connector for optional parts		
M1C~M3C	Motor (Compressor)			R33T: M3C Discharge	R9T: Liquid	X7A	Operation output (A5P)	
M1F, M2F	Motor (Fan)		S1NPH	Pressure sensor (High)		X9A	Power supply (ADAPTER) (A5P)	

	: Terminal strip	Colors:	BLK:	Black	PNK:	Pink	ORG:	Orange
	: Field wiring		RED:	Red	BRN:	Brown	BLU:	Blue
	: Connector		YLW:	Yellow	GRY:	Grey		
	: Terminal		WHT:	White	GRN:	Green		
	: Protective eart (screw)							

2TW29146-1A

NOTES

1 When using the option adaptor, refer to the installation manual

2 Refer to the installation manual, for connection wiring to indoor-outdoor transmission F1 - F2, outdoor transmission F1 - F2, outdoor-multi transmission Q1 - Q2 and on how to use BS1~BS5 and DS1, DS2 switch.

3 Do not operate the unit by short-circuiting protection device S1PH~S3PH

10 Wiring diagrams

10 - 1 Wiring Diagrams - Single Phase

REYQ8,12P9
REYQ10P8

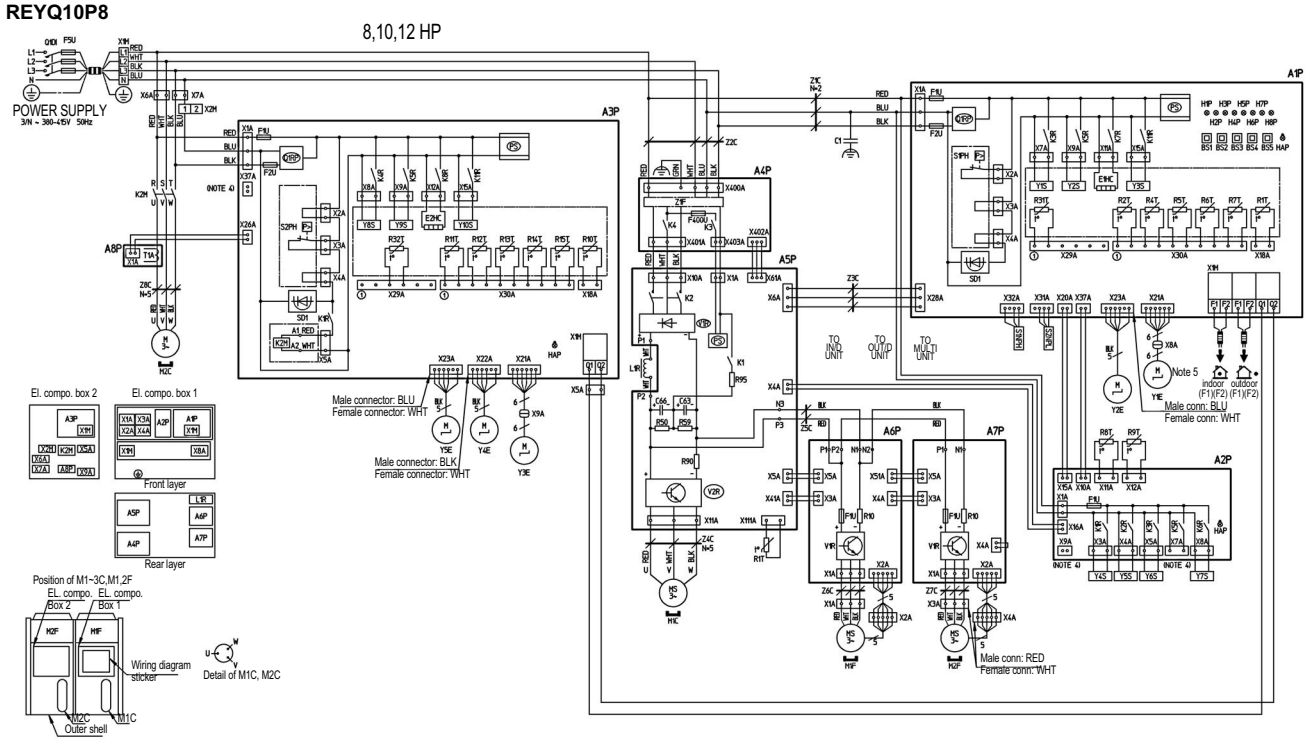

A1P~A8P	Printed circuit board		K1R~K8R, K11R	Magnetic relay		S1PH, S2PH	Pressure switch (High)
	A1P: Main	A4P,A8P: Fan		K1R: Y4S (A2P)	K5R: For option (A2P)	T1A	Current sensor
	A2P: Noise filter	A5P: Sub		K1R: K2M (A3P)	K5R: Y9S (A3P)	V1R	Diode bridge (A3P) / Power module (A4P,A8P)
	A3P: Inverter	A6P,A7P: Current sensor		K2R: Y5S	K6R: Y7S	V2R	Power module (A3P)
	A4P: Noise filter			K3R: Y1S (A1P)	K7R: E1HC (A1P)	X1A~X9A	Connector
BS1~BS5	Push button switch (Mode, Set, Return, Test, Reset)			K3R: Y6S (A2P)	K8R: E2HC (A3P)	X1M	Terminal strip (power supply)
				K4R: Y8S	K11R: Y3S (A1P)	X1M	Terminal strip (control) (A1P, A3P)
C1, C63, C66	Capacitor			K5R: Y2S (A1P)	K11R: Y10S (A3P)	X2M	Terminal strip (relay)
E1HC, E2HC	Crankcase heater (A1P, A3P)		Q1DI	Earth leakage breaker		Y1E	Electronic expansion valve (main 1)
F1U, F2U	Fuse (T, 3.15A, 250V) (A1P, A3P)		Q1RP	Reverse phase detection circuit (A1P, A3P)		Y2E	Electronic expansion valve (subcool 1)
F1U	Fuse (T, 3.15A, 250V) (A2P)		R10	Resistor (current sensor) (A6P, A7P)		Y3E	Electronic expansion valve (main 2)
F1U	Fuse (8A, DC650V) (A6P, A7P)		R50, R59	Resistor		Y4E	Electronic expansion valve (charge)
F5U	Field fuse		R90	Resistor (current sensor)		Y5E	Electronic expansion valve (subcool 2)
F400U	Fuse (T, 63A, 250V)		R95	Resistor (current limiting)		Y1S~Y10S	Solenoid valve
H1P~H8P	Pilotlamp (service monitor - orange) [H2P] Prepare, Test - - - - - - - - Flickering Malfunction detection - - - - - Light up		R1T~R15T R31T~R32T	Thermistor			Y1S: RMTG / Y6S: RMTT
				R1T: Air (A1P)	R8T: Suction 1		Y2S: 4 way valve (H/E 1) / Y7S: RMTO
				R1T: Fin (A5P)	R9T:		Y3S: RMTL / Y8S: 4 way valve (pipe)
HAP	Pilotlamp (service monitor - Green)(A1P, A2P, A3P)			R2T: H/E Gas 1			Y4S: Hot gas / Y9S: 4 way valve (H/E 2)
K1~K4	K1: Magnetic relay			R31T: M1C Discharge			Y5S: EV bypass 1 / Y10S: EV bypass 2
	K3: Magnetic relay			R32T: M2C Discharge		Z1C~Z8C	Noise filter (ferrite core)
	K2: Magnetic contactor (M1C)			R4T: H/E deicer 1		Z1F	Noise filter (wit surge absorber)
	K4: Magnetic contactor (M1C)			R5T: Sub cool H/E gas1			
L1R	Reactor			R6T: Sub cool H/E liq		Connector for optional parts	
M1C, M2C	Motor (compressor)			R7T: H/E liquid 1		X7A	Operation output (A2P)
M1F, M2F	Motor (fan)		S1NPH	Pressure sensor (High)		X9A	Power supply (adapter) (A2P)
PS	Switching power supply (A1P, A3P, A5P)		S1NPL	Pressure sensor (Low)		X37A	Power supply (adapter) (A3P)f

	: Terminal	Colors:	BLK: Black	PNK: Pink	ORG: Orange
	: Field wiring		RED: Red	BRN: Brown	BLU: Blue
	: Connector		YLW: Yellow	GRY: Grey	
	: Terminal		WHT: White	GRN: Green	
	: Protective eart (screw)				

1TW30336-1

NOTES

1 When using the option adaptor, refer to the installation manual
2 Refer to the installation manual, for connection wiring to indoor-outdoor transmission F1 - F2, outdoor transmission F1 - F2, outdoor-multi transmission Q1 - Q2 and on how to use BS1~BS5 and DS1, DS2 switch.
3 Do not operate the unit by short-circuiting protection device S1PH~S3PH

10 Wiring diagrams

10 - 1 Wiring Diagrams - Single Phase

REYQ14,16P8

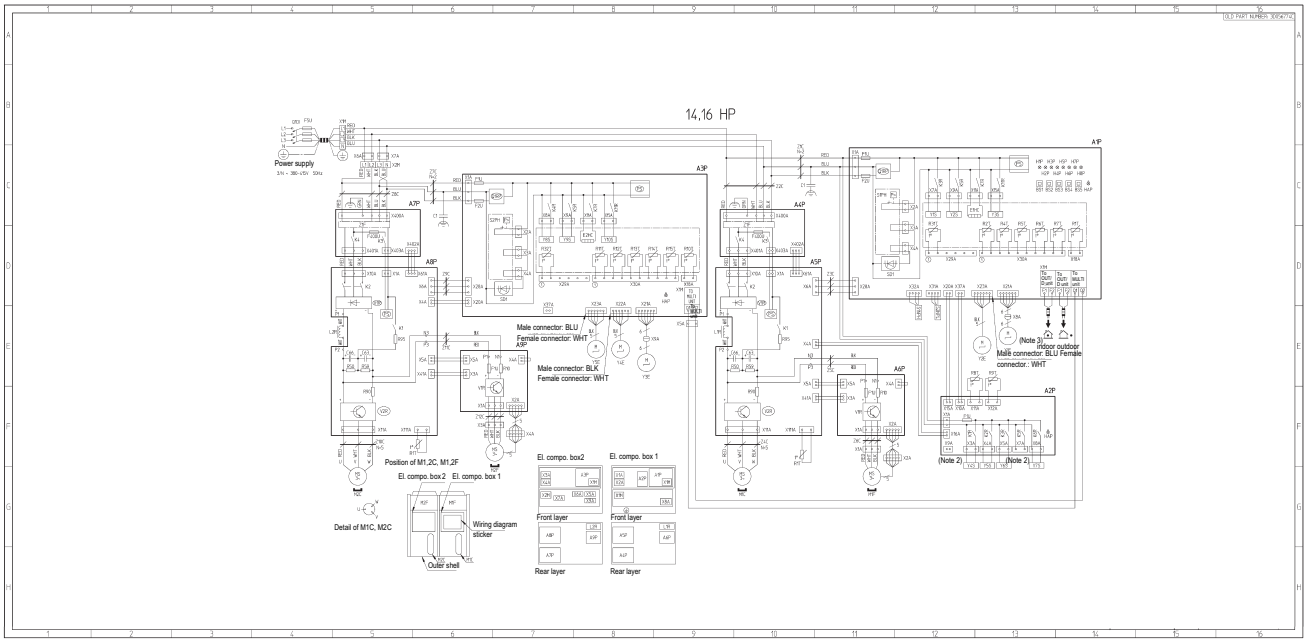

A1P~A8P	Printed circuit board		L1R,L2R	Reactor		V2R	Power module (A5P, A8P)
	A1P: Main	A4P,A7P: Noise filter	M1C, M2C	Motor (compressor)		X1A~X9A	Connector
	A2P: Sub 1	A5P, A8P: Inverter	M1F, M2F	Motor (Fan)		X1M	Terminal strip (power supply)
	A3P: Sub 2	A6P, A9P: Fan	PS	Switching power supply (A1P, A3P, A5P, A8P)		X1M	Terminal strip (control) (A1P, A3P)
BS1~BS5	Push button switch (Mode, set, return, test, reset)		Q1DI	Earth leakage breaker		X2M	Terminal strip (relay)
C1, C63, C66	Capacitor		Q1RP	Reverse phase detection circuit (A1P, A3P)		Y1E	Electronic expansion valve (main 1)
E1HC, E2HC	Crankcase heater (A1P, A3P)		R10	Resistor (current sensor) (A6P, A9P)		Y2E	Electronic expansion valve (subcool 1)
F1U, F2U	Fuse (T, 3.15A, 250V) (A1P, A3P)		R50,59	Resistor (A5P, A8P)		Y3E	Electronic expansion valve (main 2)
F1U	Fuse (T, 3.15A, 250V) (A2P)		R90	Resistor (current sensor) (A5P, A8P)		Y4E	Electronic expansion valve (charge)
F1U	Fuse (8A, DC650V) (A6P,A9P)		R95	Resistor (current limiting) (A5P, A8P)		Y5E	Electronic expansion valve (subcool 2)
F5U	Field fuse		R1T~R15T R31T, R32T	Thermistor		Y1S~Y10S	Solenoid valve
F400U	Fuse (T, 63A, 250V)			R1T: Air (A1P)	R8T: Suction 1		Y1S: RMTG / Y6S: RMTT
H1P~H8P	Pilotlamp (service monitor - orange) [H2P] Prepare, test ----------flickering Malfunction detection - - light up			R1T: Fin (A5P), (A8P)	R9T: Liquid 1		Y2S: 4way valve (H/E 1) / Y7S: RMTO
HAP	Pilot lamp (service monitor - green) (A1P, A2P, A3P)			R2T: H/E Gas 1	R10T: Suction 2		Y3S: RMTL / Y8S: 4 way valve (pipe)
K1~K4	K1: Magnetic relay (A5P, A8P)			R31T: M1C Discharge	R11T: H/E Gas 2		Y4S: Hot gas / Y9S: 4 way valve (H/E 2)
	K3: Magnetic relay (A4P, A7P)			R32T: M2C Discharge	R12T: H/E Deicer 2		Y5S: EV Bypass 1 / Y10S: EV Bypass 2
	K2: Magnetic contactor (M1C-A5P,M2C-A8P)			R4T: H/E Deicer 1	R13T: Sub cool H/E Gas 2	Z1C~Z12C	Noise filter (ferrite core)
	K4: Magnetic contactor (M1C-A4P, M2C-A7P)			R5T: Sub cool H/E Gas 1	R14T: Liquid 2	Z1F	Noise filter (with surge absorber) (A4P, A7P)
K1R~K8R; K11R	Magnetic relay			R6T:Sub cool H/E Liq	R15T: H/E Liquid 2		Connector for optional parts
	K1R: Y4S	K5R: for option (A2P)		R7T:H/E Liquid 1		X7A	Operation output (A2P)
	K2R: Y5S	K5R: Y9S (A3P)	S1NPH	Pressure sensor (high)		X9A	Power supply (adapter) (A2P)
	K3R: Y1S (A1P)	K6R: Y7S (A2P)	S2NPL	Pressure sensor (low)		X37A	Power supply (adapter) (A3P)
	K3R: Y6S (A2P)	K7R: E1HC (A1P)	S1PH, S2PH	Pressure switch (high)			
	K4R: Y8S	K7R: E2HC (A3P)	SD1	Safety devices input (A1P, A3P)			
	K5R: Y2S (A1P)	K11R: Y10S (A3P)	V1R	Diode bridge (A5P, A8P)	Power module (A6P, A9P		

	: Terminal strip	Colours:	BLK: Black	PNK: Pink	
	: Connector		BLU: Blue	RED: Red	
	: Protective earth		BRN: Brown	WHT: White	
	: Terminal		ORG: Orange	YLW: Yellow	
	: Field wiring		GRY: Grey	GRN: Green	

1TW30356-1

NOTES

1 This wiring diagram only applies to the outdoor unit
2 When using the option adapter, refer to the installation manual.
3 Refer to the installation manual, for connection wiring to indoor-outdoor tranmission F1-F2, outdoor-outdoor tranmission F1-F2, and on how to use BS1~BS5.
4 Do not operate the unit by short cicuiting protection device S1PH, S2PH.

11 External connection diagrams

11 - 1 External Connection Diagrams

REYQ8,12P9

REYQ10,14,16P8

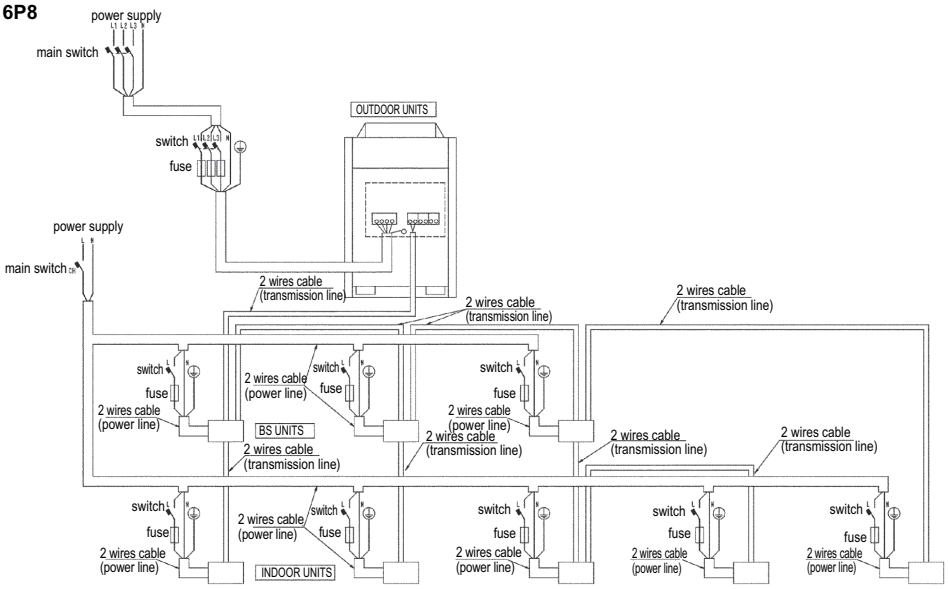

NOTES

1 All wiring, components and materials to be procured on the site must comply with the applicable local and national codes
2 Use copper conducters only.
3 As for details, see wiring diagram.
4 Install circuit breaker for safety.
5 All field wiring and components must be provided by licensed electrician.
6 Unit shall be grounded in compliance with the applicable local and national codes
7 Wiring shown are general points-of-connection guides only and are not intended for or to include all details for a specific installation.
8 Be sure to install the switch and the fuse to the power line of each equipment.
9 Install the main switch that can interrupt all the power sources in an integrated manner because this system consists of the equipment utilizing the multiple power sources.
10 If there exists the possibility of reversed phase, lose phase, momentary blackout or the power goes on and off while the product is operating, attach a reversed phase protection circuit locally. Running the product in reversed phase may break the compressor and other parts.

3D057764A

REYQ18,20P9 **REYQ22-32P8**

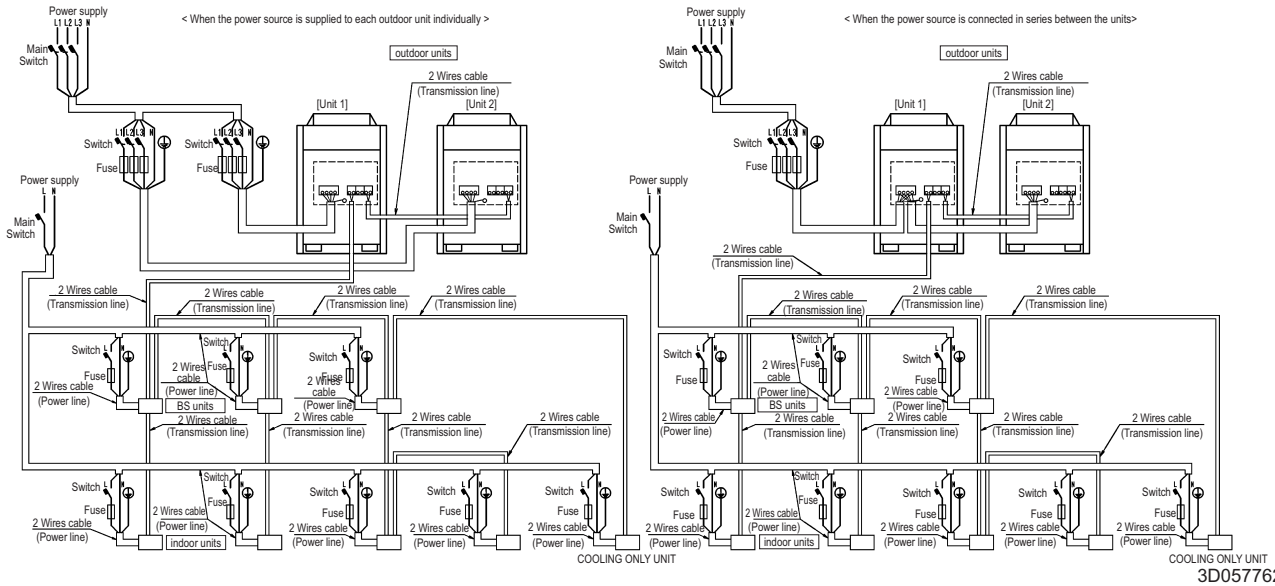

3D057762A

NOTES

1. All wiring, components and materials to be procured on the site must comply with the applicable local and national codes.
2. Use copper conductors only.
3. As for details, see wiring diagram.
4. Install circuit breaker for safety.
5. All field wiring and components must be provided by licensed electrician.
6. Unit shall be grounded in compliance with the applicable local and national codes.
7. Wiring shown are general points-of-connection guides only and are not intended for or to include all details for a specific installation.
8. Be sure to install the switch and the fuse to the power line of each equipement.
9. Install the main switch that can interrupt all the power sources in an integrated manner because this system consists of the equipment utilizing the multiple power sources.
10. The capacity of UNIT1 must be larger than UNIT2 when the power source is connected in series between the units.
11. If there exists the possibility of reversed phase, lose phase, momentary blackout or the power goes on and off while the product is operating, attach a reversed phase protection circuit locally. Running the product in reversed phase may break the compressor and other parts.
12. Must install earth leakage circuit breaker.

11 External connection diagrams

11 - 1 External Connection Diagrams

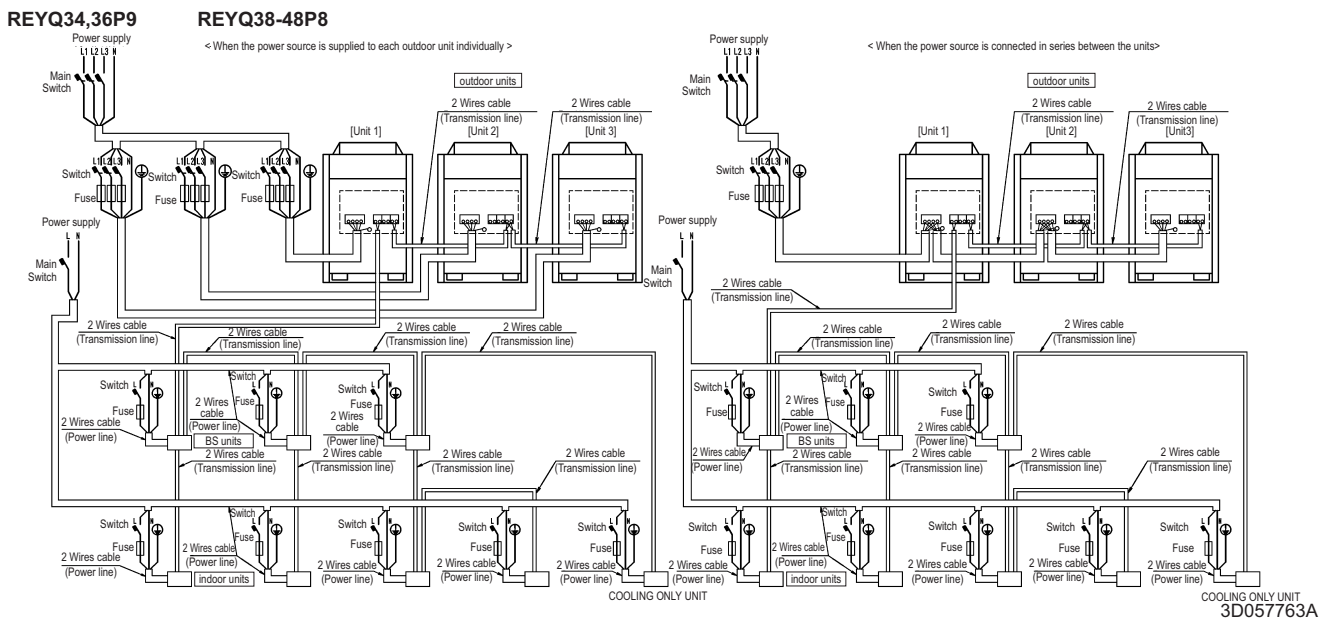

NOTES

1. All wiring, components and materials to be procured on the site must comply with the applicable local and national codes.
2. Use copper conductors only.
3. As for details, see wiring diagram.
4. Install circuit breaker for safety.
5. All field wiring and components must be provided by licensed electrician.
6. Unit shall be grounded in compliance with the applicable local and national codes.
7. Wiring shown are general points-of-connection guides only and are not intended for or to include all details for a specific installation.
8. Be sure to install the switch and the fuse to the power line of each equipement.
9. Install the main switch that can interrupt all the power sources in an integrated manner because this system consists of the equipment utilizing the multiple power sources.
10. The capacity of UNIT1 must be larger than UNIT2 when the power source is connected in series between the units.
11. If there exists the possibility of reversed phase, lose phase, momentary blackout or the power goes on and off while the product is operating, attach a reversed phase protection circuit locally. Running the product in reversed phase may break the compressor and other parts.
12. Must install earth leakage circuit breaker.

12 Sound data

12 - 1 Sound Level Data

REYQ18,20,34,36P9 - REYQ22~32,38~48P8

Sound power and pressure (Cooling)

Unit	Sound Power [dBA]	Sound Pressure [dBA]
REYQ18P9	81	61
REYQ20P9	83	62
REYQ22P8	83	63
REYQ24P8	83	63
REYQ26P8	83	63
REYQ28P8	83	63
REYQ30P8	83	63
REYQ32P8	83	63
REYQ34P9	84	64
REYQ36P9	85	64
REYQ38P8	85	65
REYQ40P8	85	65
REYQ42P8	85	65
REYQ44P8	85	65
REYQ46P8	85	65
REYQ48P8	85	65

4TW29127-2A

NOTES

1 Sound power level is an absolute value that a sound source generates.

2 Sound pressure level is a relative value, depending on the distance and acoustic environment. For more details, please refer to the sound level drawings.

3 Mentioned values are theoretical values based on sound results of individual installed units. Possible deviatons for sound values due to variety of installation patterns are not taken into account.

12 Sound data

12 - 2 Sound Power Spectrum

REMQ10P8 3TW29127-1

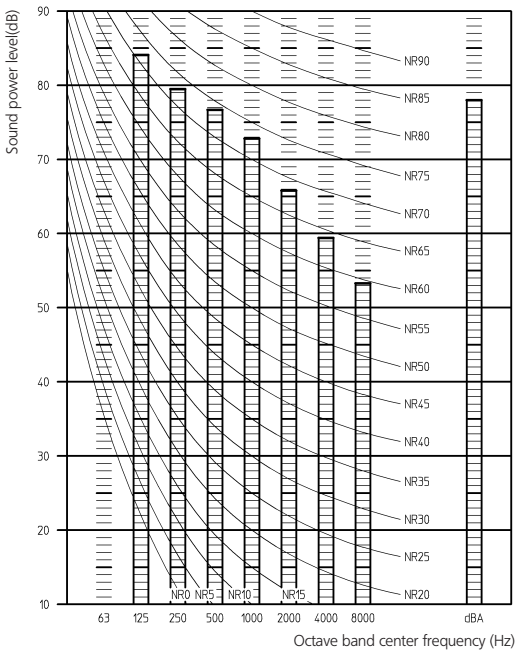

NOTES

1 dBA = A-weighted sound power level (A-scale according to IEC)
2 Reference acoustic intensity 0dB = 10E-6μW/m^2.
3 Measured according to ISO 3744

REMQ12P8 3TW29137-1

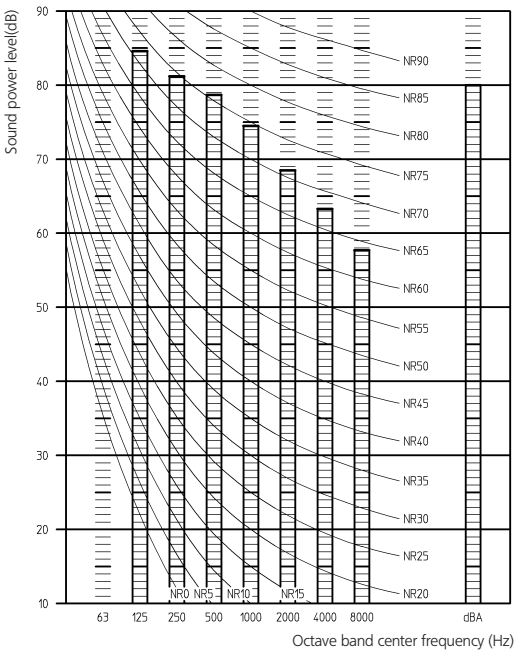

NOTES

1 dBA = A-weighted sound power level (A-scale according to IEC)
2 Reference acoustic intensity 0dB = 10E-6μW/m^2.
3 Measured according to ISO 3744

REMQ14,16P8 3TW29147-1

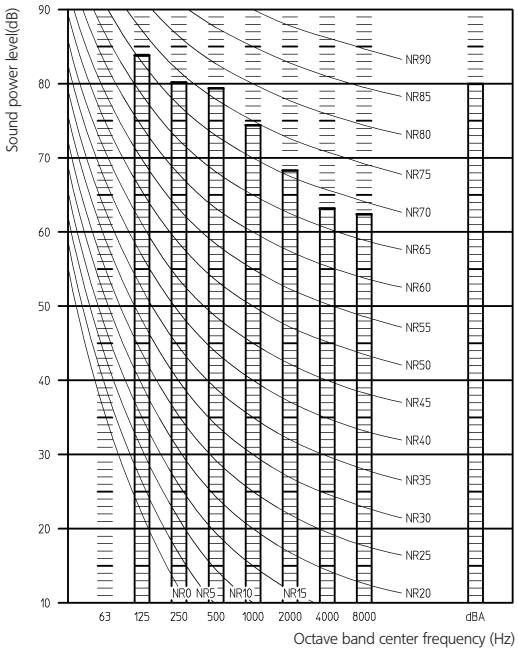

NOTES

1 dBA = A-weighted sound power level (A-scale according to IEC)
2 Reference acoustic intensity 0dB = 10E-6μW/m^2.
3 Measured according to ISO 3744

REMQ8P9 3TW29117-1

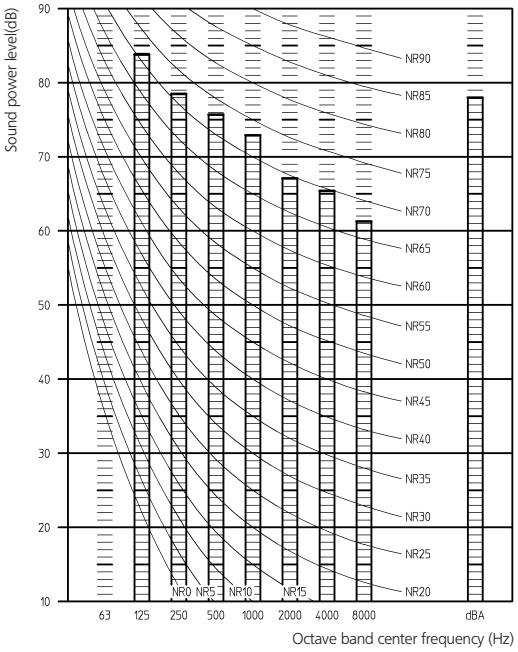

NOTES

1 dBA = A-weighted sound power level (A-scale according to IEC)
2 Reference acoustic intensity 0dB = 10E-6μW/m^2.
3 Measured according to ISO 3744

12 Sound data

12 - 2 Sound Power Spectrum

REYQ8P9

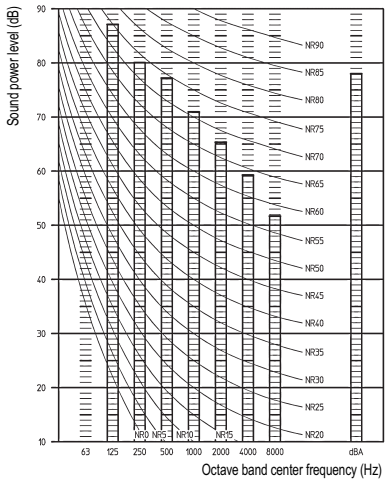

3TW30327-1

NOTE

1 dBA = A-weighted sound power level. (A-scale according to IEC).
2 Reference acoustic intesity 0dB = 10E-6μW/m^2.
3 Measured according to ISO 3744

REYQ10P8

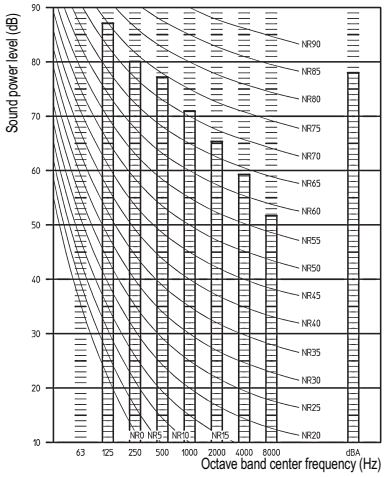

3TW30337-1

NOTE

1 dBA = A-weighted sound power level. (A-scale according to IEC).
2 Reference acoustic intesity 0dB = 10E-6μW/m^2.
3 Measured according to ISO 3744

REYQ12P9

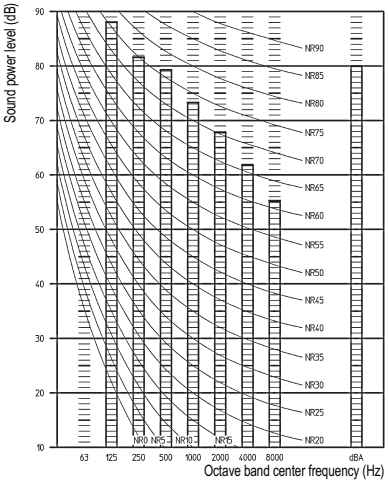

3TW30347-1

NOTE

1 dBA = A-weighted sound power level. (A-scale according to IEC).
2 Reference acoustic intesity 0dB = 10E-6μW/m^2.
3 Measured according to ISO 3744

REYQ14P8

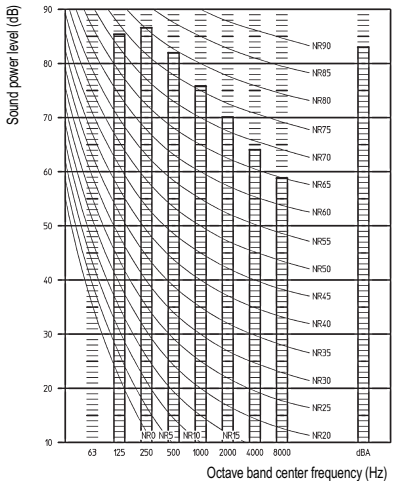

3TW30357-1

NOTE

1 dBA = A-weighted sound power level. (A-scale according to IEC).
2 Reference acoustic intesity 0dB = 10E-6μW/m^2.
3 Measured according to ISO 3744

12 Sound data

12 - 2 Sound Power Spectrum

REYQ16P8

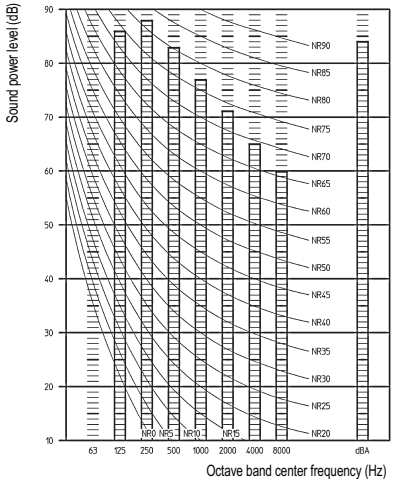

3TW30367-1

NOTE

1 dBA = A-weighted sound power level. (A-scale according to IEC).
2 Reference acoustic intesity 0dB = 10E-6μW/m^2.
3 Measured according to ISO 3744

12 Sound data

12 - 3 Sound Pressure Spectrum

REMQ10P8 4D057844

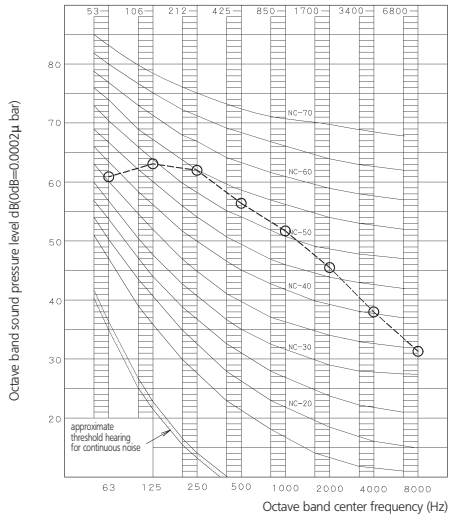

NOTES

1 Over all (dB)
(B,G,N is already rectified)

Scale	50Hz
A	58
C	67

2 Operating conditions:
- Power source: Y1: 380-415V 50Hz
- JIS standard

Measuring place: Anechoic chamber (conversion value)

3 The operating sound is measured in anechoic chamber, if it is measured under the actual installation conditions, it is normally over the set value due to enviromental noise and sound reflection.

4 Location of microphone

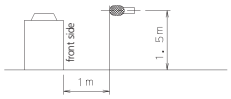

REMQ12P8 4D057894

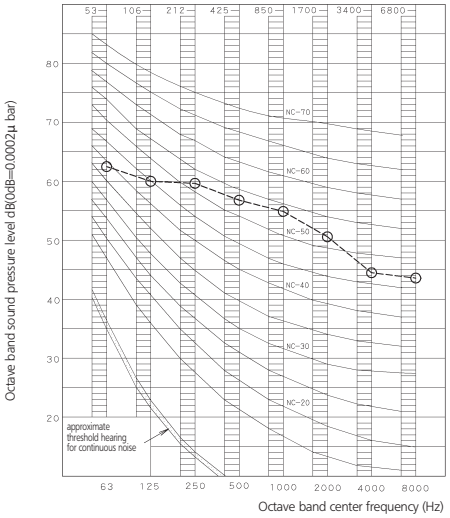

NOTES

1 Over all (dB)
(B,G,N is already rectified)

Scale	50Hz
A	60
C	66

2 Operating conditions:
- Power source: Y1: 380-415V 50Hz
- JIS standard

Measuring place: Anechoic chamber (conversion value)

3 The operating sound is measured in anechoic chamber, if it is measured under the actual installation conditions, it is normally over the set value due to enviromental noise and sound reflection.

4 Location of microphone

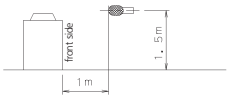

REMQ14,16P9 4D057845

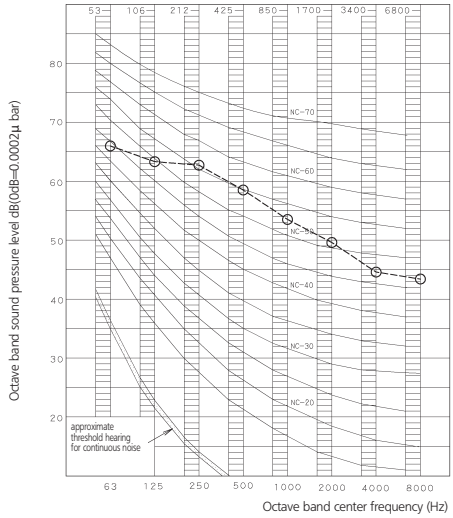

NOTES

1 Over all (dB)
(B,G,N is already rectified)

Scale	50Hz
A	60
C	69

2 Operating conditions:
- Power source: Y1: 380-415V 50Hz
- JIS standard

Measuring place: Anechoic chamber (conversion value)

3 The operating sound is measured in anechoic chamber, if it is measured under the actual installation conditions, it is normally over the set value due to enviromental noise and sound reflection.

4 Location of microphone

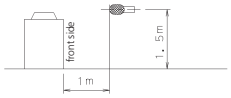

REMQ8P9 4D057843

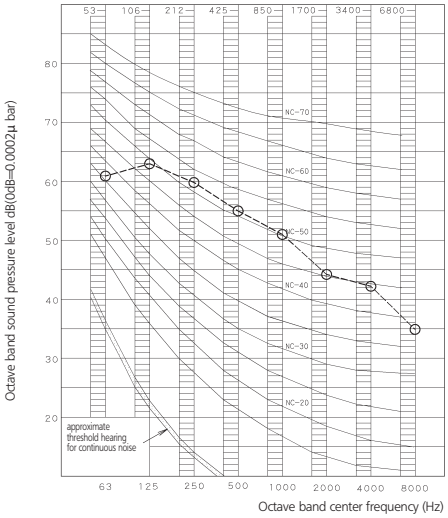

NOTES

1 Over all (dB)
(B,G,N is already rectified)

Scale	50Hz
A	57
C	66

2 Operating conditions:
- Power source: Y1: 380-415V 50Hz
- JIS standard

Measuring place: Anechoic chamber (conversion value)

3 The operating sound is measured in anechoic chamber, if it is measured under the actual installation conditions, it is normally over the set value due to enviromental noise and sound reflection.

4 Location of microphone

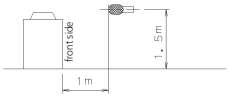

12 Sound data

12 - 3 Sound Pressure Spectrum

REYQ8P9

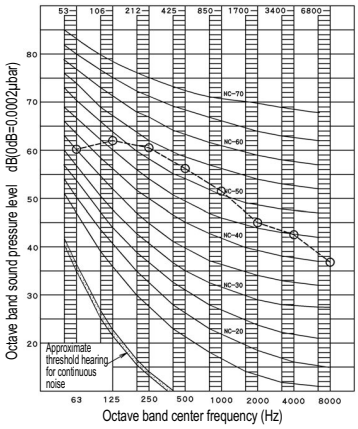

4D058294A

NOTE

1 Over All (dB):
(B, G, N is already rectified)

Scale	50Hz
A	58
C	66

2 Operating conditons:
- Power source: Y1: 380-415V 50Hz
- JIS Standard

3 Measuring place: Anechoic chamber (Conversion value)

4 Location of microphone

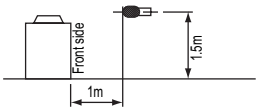

5 The operating sound is measured in anechoic chamber.
If it is measured under the actual istallation conditions, it is normally over the set value due to enviromental noise and sound reflection.

REYQ10P8

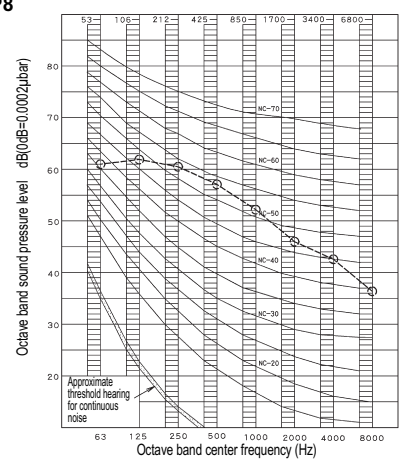

4D058295A

NOTE

1 Over All (dB):
(B, G, N is already rectified)

Scale	50Hz
A	58
C	66

2 Operating conditons:
- Power source Y1: 380-415V 50Hz
- JIS standard

3 Measuring place: Anechoic chamber (conversion value)
The operating sound is measured in anechoic chamber, if it is measured under the actual installation conditions, it is normally over the set value due to environmental noise and sound reflection.

4 Location of microphone

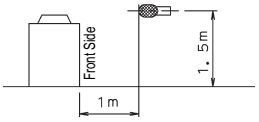

REYQ12P9

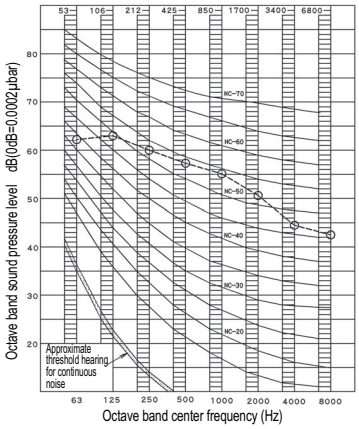

4D058296A

NOTE

1 Over All (dB):
(B, G, N is already rectified)

Scale	50Hz
A	60
C	67

2 Operating conditons:
- Power source: Y1: 380-415V 50Hz
- JIS Standard

3 Measuring place: Anechoic chamber (Conversion value)

4 Location of microphone

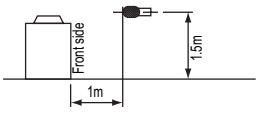

5 The operating sound is measured in anechoic chamber.
If it is measured under the actual istallation conditions, it is normally over the set value due to enviromental noise and sound reflection.

REYQ14P8

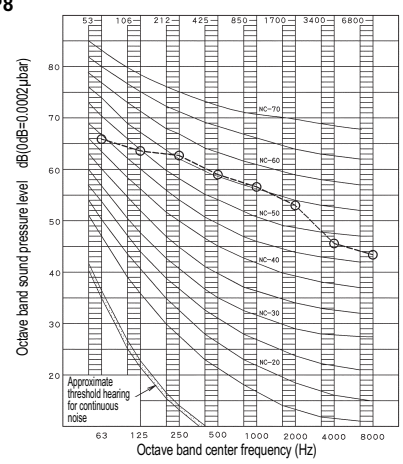

4D058297A

NOTE

1 Over All (dB):
(B, G, N is already rectified)

Scale	50Hz
A	62
C	69

2 Operating conditons:
- Power source Y1: 380-415V 50Hz
- JIS standard

3 Measuring place: Anechoic chamber (conversion value)
The operating sound is measured in anechoic chamber, if it is measured under the actual installation conditions, it is normally over the set value due to environmental noise and sound reflection.

4 Location of microphone:

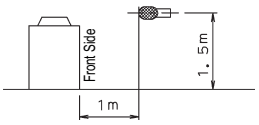

12 Sound data

12 - 3 Sound Pressure Spectrum

REYQ16P8

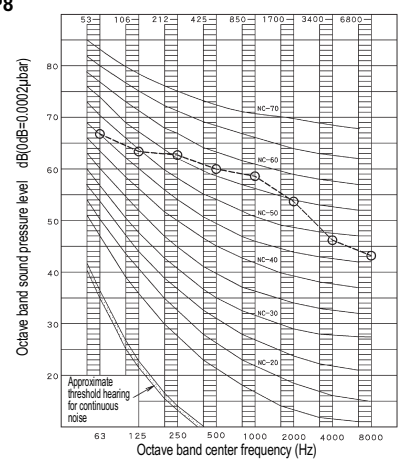

4D058298A

NOTE

1 Over All (dB):
(B, G, N is already rectified)

Scale	50Hz
A	63
C	70

2 Operating conditons:
- Power source Y1: 380-415V 50Hz
- JIS standard

3 Measuring place: Anechoic chamber (conversion value)
The operating sound is measured in anechoic chamber, if it is measured under the actual installation conditions, it is normally over the set value due to environmental noise and sound reflection.

4 Location of microphone

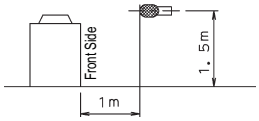

13 Installation

13 - 1 Service Space

REYQ-P8/P9
REMQ-P8/P9

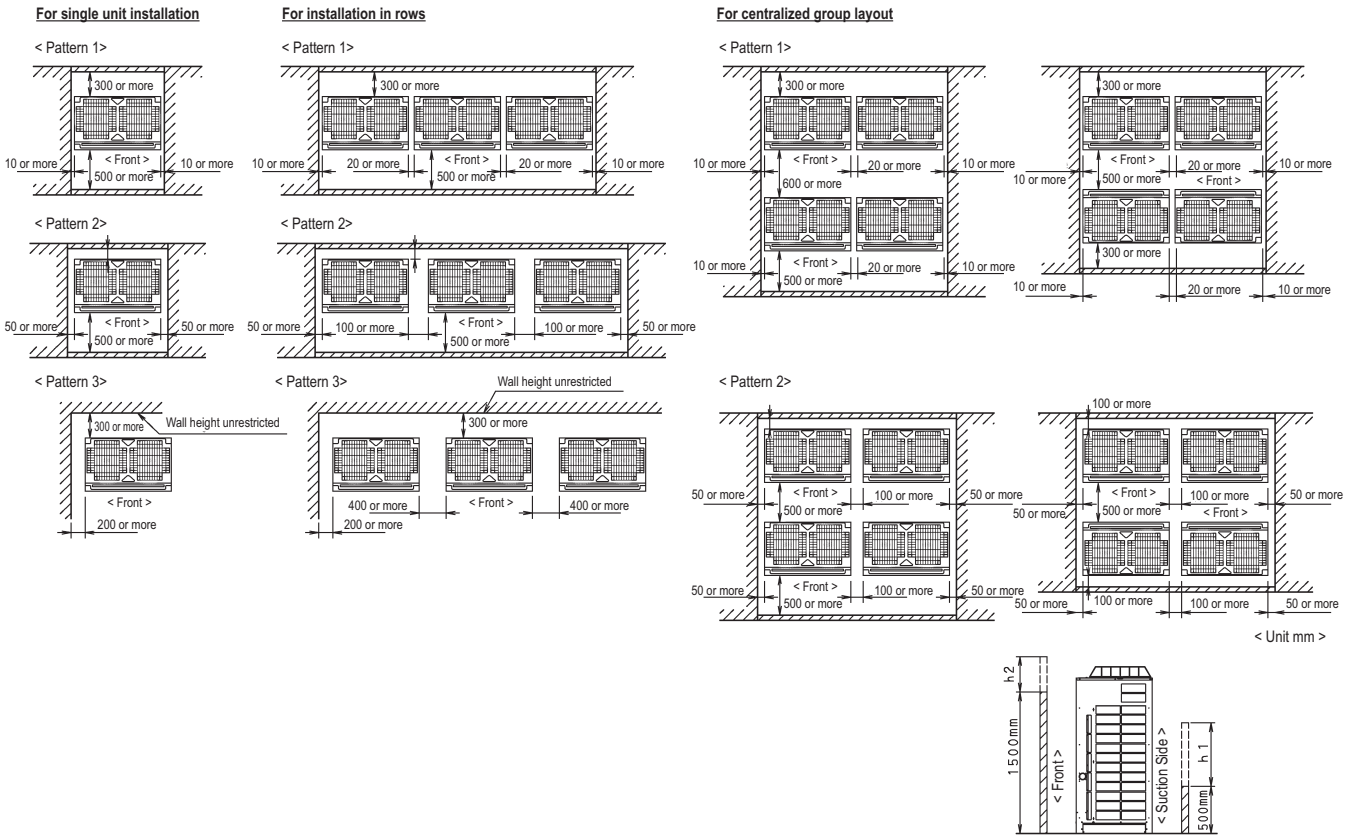

3D0514514U

NOTES

1. Heights of walls in case of Patterns 1 and 2:
   Front: 1500mm
   Suction side: 500mm
   Side: Height unrestricted.
   Installation space to be shown in this drawing is based on the cooling operation at 35 degrees outdoor air temperature. When the design outdoor air temperature exceeds 35 degrees or the load exceeds maximum ability because of much generation load of heat in all outdoor units, take the suction side space more broadly than the space to be shown in this drawing.
2. If the above wall heights are exceeded then h2/2 and h1/2 should be added to the front and suction side service spaces respectively as shown in the figure on the right.
3. When installing the units most appropriate pattern should be selected from those shown above in order to obtain the best fit in the space available always bearing in mind the need to leave enough space for a person to pass between units and wall and for the air to circulate freely. (If more units are to be installed than are catered for in the above patterns your layout should take account of the possibility of short circuits.)
4. The units should be installed to leave sufficient space at the front for the on site refrigerant piping work to be carried out comfortably.

13 Installation

13 - 2 Fixation and Foundation of Units

REYQ-P8/P9
REMQ-P8/P9

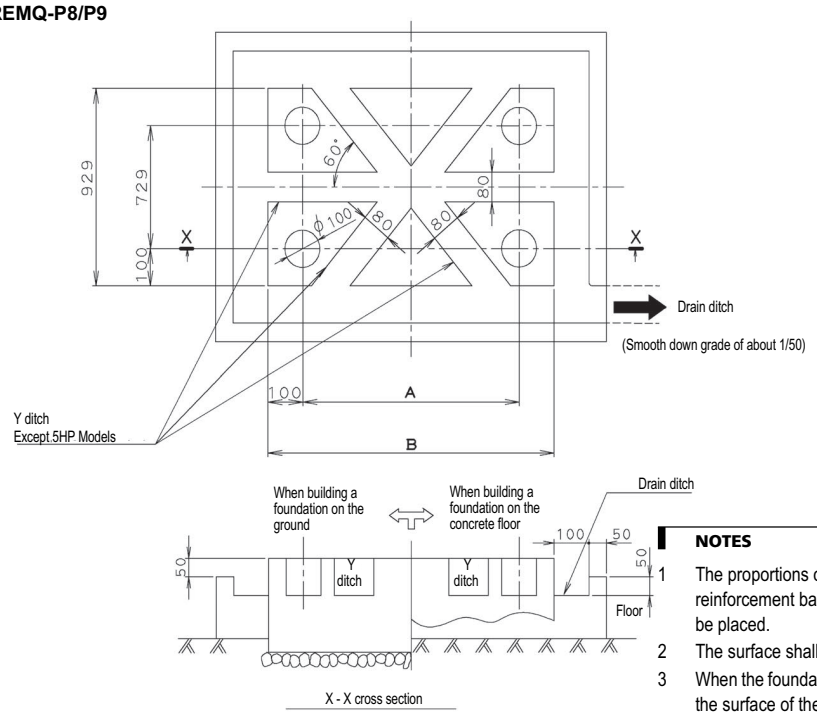

X - X cross section

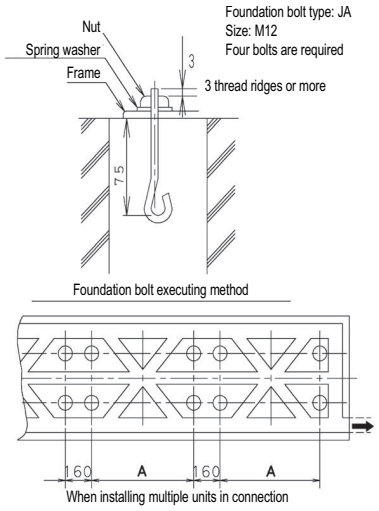

Model	A	B
REMQ10P8 REMQ8,12P9	792	992
REMQ14,16P8	1102	1302
REYQ8,12P9 REYQ10,12,14,16P8	1162	1362

NOTES

1. The proportions of cement:sand:gravel for the concrete shale be 1:2:4, and the reinforcement bars that their diameter are 10mm, (Approx. 300mm intervals) shall be placed.
2. The surface shall be finished with mortar. The corner edges shall be chamfered.
3. When the foundation is build on a concrete floor, rubble is not necessary. However, the surface of the section on which the foundation is built shall have rough finish.
4. A drain ditch shall be made around the foundation to thoroughly drain water from the equipment installation area.
5. When installing the equipment on a roof, the floor strength shall be checked, and water-proofing measures shall be taken.
6. Y ditch is not necessary for 5HP models.

3D040102Z

13 Installation

13 - 3 Refrigerant Pipe Selection

REMQ-P8/P9
REMHQ-P8

Example of connection
(Connection of 8 indoor units)

Use the outdoor unit multi connection piping kit that is sold separately as an option (BHFQ23P907+1357) for the multi installation of outdoor units. Selection method is as shown in the right table.

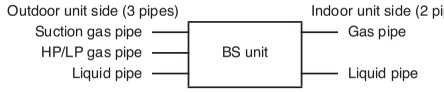

Install the joint part (◀ part in the figure) of the outdoor unit multi connection piping kit horizontally with attention to the installation restrictions described in "connecting the refrigerant piping".
(*) In case of multi combination, interprete the word "outdoor" as "first outdoor branch".

Outdoor units installed in a multiple outdoor unit system (REYQ18~48 + REYHQ16 + REYHQ20~24)

Branch with refnet joint	Branch with refnet joint and refnet header	Branch with refnet header
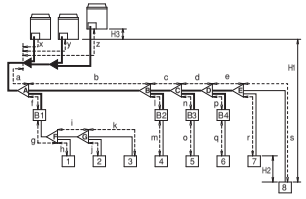	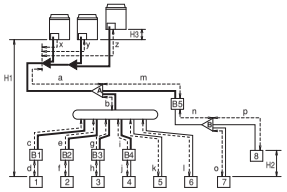	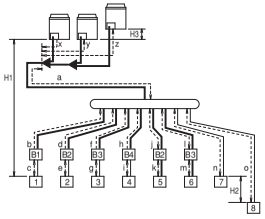

1 indoor unit
refnet joint
refnet header
◀ outdoor multi connection piping kit
Outdoor unit side (3 pipes)
Indoor unit side (2 pipes)

Maximum allowable length	Between outdoor and indoor units	Actual pipe length	Pipe length between outdoor(*) and indoor units ≤165 m		
			[Example] unit 8: a+b+c+d+e+s≤165 m	[Example] unit 6: a+b+l≤165 m, unit 8: a+m+n+p≤165 m	[Example] unit 8: a+o≤165 m
		Equivalent length	Equivalent pipe length between outdoor(*) and indoor units ≤190 m (Assume equivalent pipe length of the refnet joint to be 0.5 m, of the refnet header to be 1.0 m, of the BSVQ100 and BSVQ160 to be 4 m and of the BSVQ250 to be 6 m (for calculation purposes)) (See note 1)		
		Total extension length	Total piping length from outdoor(*) to all indoor units ≤1000 m		
	Between the first outdoor unit multi connection piping kit and outdoor unit (in case of a multiple outdoor unit system)	Actual and equivalent pipe length	The actual pipe length from the first outdoor unit multi connection piping kit to the outdoor unit ≤10 m. (x≤10 m, y≤10 m, z≤10 m) The equivalent pipe length from the first outdoor unit multi connection piping kit to the outdoor unit ≤13 m. (x≤13 m, y≤13 m, z≤13 m)		
Allowable height difference	Between outdoor and indoor units		Difference in height between outdoor and indoor units (H1)≤50 m (≤40 m if outdoor unit is located in a lower position).		
	Between indoor and indoor units		Difference in height between adjacent indoor units (H2)≤15 m		
	Between outdoor and outdoor units		Difference in height between adjacent outdoor units (H3)≤5 m		
Allowable length after the branch		Actual pipe length	Pipe length from first refrigerant branch kit (either refnet joint or refnet header) to indoor unit ≤40 m (See note 2)		
			[Example] unit 8: b+c+d+e+s≤40 m	[Example] unit 6: b+l≤40 m, unit 8: m+n+p≤40 m	[Example] unit 8: o≤40 m
	Example of downstream indoor units		[Example] in case of refnet joint C: indoor units 5+6+7+8	[Example] in case of refnet joint B: indoor units 7+8, in case of refnet header: indoor units 1+2+3+4+5+6	[Example] in case of refnet header: indoor units 1+2+3+4+5+6+7+8

Outdoor unit multi connection piping kit and refrigerant branch kit selection

Refrigerant branch kits can only be used with R410A.

How to select the refnet joint
When using refnet joints at the first branch counted from the outdoor unit side, choose from the following table in accordance with the capacity of the outdoor unit (example: refnet joint A).

Outdoor unit capacity type (Hp)	Refrigerant branch kit name
8+10	KHRQ23M29T
12~22	KHRQ23M64T
≥24	KHRQ23M75T

For refnet joints other than the first branch, select the proper branch kit model based on the total capacity index of all indoor units connected after the refrigerant branch.

Indoor capacity type	Refrigerant branch kit name	
	3 pipes	2 pipes
<200	KHRQ23M20T	KHRQ22M20T
200≤x<290	KHRQ23M29T9	KHRQ22M29T
290≤x<640	KHRQ23M64T	KHRQ22M64T
≥640	KHRQ23M75T	KHRQ22M75T

How to select the refnet header
Choose from the following table in accordance with the total capacity of all the indoor units connected below the refnet header.
Note: 250 type indoor unit can not be connected lower than the refnet header.

Indoor capacity type	Refrigerant branch kit name	
	3 pipes	2 pipes
<200	KHRQ23M29H	KHRQ22M29H
200≤x<290	KHRQ23M29H	KHRQ22M29H
290≤x<640	KHRQ23M64H	KHRQ22M64H
≥640	KHRQ23M75H	KHRQ22M75H

How to choose an outdoor multi connection piping kit (this is required when the system is a multiple outdoor unit system)

Choose from the following table in accordance with the number of outdoor units

Number of outdoor units	Branch kit name
2	BHFQ23P907
3	BHFQ23P1357

13 Installation

13 - 3 Refrigerant Pipe Selection

REMQ-P8/P9
REMHQ-P8

Pipe size selection
For an outdoor unit multi installation (REYQ18~48P + REYHQ16~24), select the pipe size in accordance with the following figure.

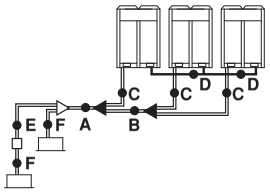

A. Piping between outdoor unit and refrigerant branch kit
B. Piping between outdoor unit multi connection piping units
Choose from the following table in accordance with the outdoor unit total capacity type, connected downstream.

Outdoor unit capacity type (Hp)	Piping outer diameter size (mm)		
	Suction gas pipe	HP/LP gas pipe	Liquid pipe
8	19.1	15.9	9.5
10	22.2	19.1	9.5
12	28.6	19.1	12.7
14+16	28.6	22.2	12.7
18	28.6	22.2	15.9
20+22	28.6	28.6	15.9
24	34.9	28.6	15.9
26~34	34.9	28.6	19.1
36	41.3	28.6	19.1
38~48	41.3	34.9	19.1

C. Piping between outdoor unit multi connection piping kit and outdoor unit
Choose from the following table in accordance with the capacity type of the connected outdoor unit.

Outdoor unit capacity type (Hp)	Piping outer diameter size (mm)		
	Suction gas pipe	HP/LP gas pipe	Liquid pipe
8+10	22.2	19.1	9.5
12	28.6	19.1	12.7
14+16	28.6	22.2	12.7

E. Piping between refrigerant branch kit and BS unit
Pipe size for direct connection to indoor unit must be the same as the connection size of indoor unit. Choose from the following table in accordance with the indoor unit total capacity type, connected downstream.

Indoor unit capacity type	Piping outer diameter size (mm)		
	Suction gas pipe	HP/LP gas pipe	Liquid pipe
<150	15.9	12.7	9.5
150≤x<200	19.1	15.9	9.5
200≤x<290	22.2	19.1	9.5
290≤x<420	28.6	19.1	12.7
420≤x<640	28.6	28.6	15.9
640≤x<920	34.9	28.6	19.1
≥920	41.3	28.6	19.1

F. Piping between refrigerant branch kit or BS unit and indoor unit
Choose from the following table in accordance with the capacity type of the connected indoor unit.

Indoor unit capacity type	Piping outer diameter size (mm)	
	Suction gas pipe	Liquid pipe
20, 25, 32, 40, 50	12.7	6.4
63, 80, 100, 125	15.9	9.5
200	19.1	9.5
250	22.2	9.5

D. Equalizer piping (outdoor units only)

Piping outer diameter size (mm)	19.1

How to calculate the additional refrigerant to be charged
Additional refrigerant to be charged R (kg)
R should be rounded off in units of 0.1 kg

The refrigerant charge of the system must be less than 100 kg. This means that in case the calculated refrigerant charge is equal to or more than 95 kg you must divide your multiple outdoor system into smaller independent systems, each containing less than 95 kg refrigerant charge.
For factory charge, refer to the unit name plate.

$$R = \left[\begin{array}{l}[(X_1 \times \mathbf{Ø22.2}) \times 0.37] + [(X_2 \times \mathbf{Ø19.1}) \times 0.26] + \\ [(X_3 \times \mathbf{Ø15.9}) \times 0.18] + [(X_4 \times \mathbf{Ø12.7}) \times 0.12] + \\ [(X_5 \times \mathbf{Ø9.5}) \times 0.059] + [(X_6 \times \mathbf{Ø6.4}) \times 0.022]\end{array}\right] \times 1.02 + \mathbf{A} + \mathbf{B}$$

$X_{1...6}$ = Total length (m) of liquid piping size at **Øa**
A = Weight according to table A
B = Weight according to table B in function of indoor unit connection ratio

REYQ	A
18+20 Hp	**1.0** kg
22+24 Hp	**1.5** kg
26 Hp	**2.0** kg
28+30 Hp	**2.5** kg
32~40 Hp	**3.0** kg
42 Hp	**3.5** kg
44+46 Hp	**4.0** kg
48 Hp	**4.5** kg

REYHQ	A
16 Hp	**1.0** kg
20 Hp	**1.5** kg
22+24 Hp	**2.0** kg

REY(H)Q		B
16~32 Hp	>100% ≤130%	**0.5** kg
34~48 Hp	>100% ≤120%	**0.5** kg
	>120% ≤130%	**1.0** kg

Example for refrigerant branch using refnet joint and refnet header for REYQ34. REYQ34 = REMQ8+REMQ10+REMQ16, the indoor unit connection ratio = 120% and the piping lengths are as below.

a : Ø19.1x30 m	f : Ø9.5x10 m	k : Ø9.5x20 m	p : Ø6.4x10 m
b : Ø19.1x20 m	g : Ø9.5x10 m	l : Ø9.5x20 m	r : 12.7x3 m
c : Ø9.5x10 m	h : Ø9.5x10 m	m: Ø9.5x20 m	s : Ø9.5x3 m
d : Ø9.5x10 m	i : Ø9.5x10 m	n : Ø9.5x10 m	t : Ø9.5x3 m
e : Ø9.5x10 m	j : Ø9.5x10 m	o : Ø6.4x10 m	u : Ø15.9x1 m

R = [[50x0.26]+[1x0.18]+[3x0.12]+[156x0.059]+[20x0.022]]x1.02**+3.0+0.5**
= 27.148 ⇒ **R = 27.1 kg**

13 Installation

13 - 3 Refrigerant Pipe Selection

REMQ-P8/P9
REMHQ-P8

Note 1

When the equivalent pipe length between outdoor and indoor units is 90 m or more, the size of the main liquid pipe must be increased. Never increase suction gas pipe and HP/LP gas pipe sizes.
Depending on the length of the piping, the capacity may drop, but even in such a case it is possible to increase the size of the main liquid pipe.

REY(H)Q	Ø	REY(H)Q	Ø
8+10	9.5 → 12.7	18~24	15.9 → 19.1
12~16	12.7 → 15.9	26~48	19.1 → 22.2

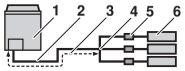

1 Outdoor unit
2 Main pipes
3 Increase only liquid pipe size
4 First refrigerant branch kit
5 BS unit
6 Indoor unit

Note 2

Allowable length after the first refrigerant branch kit to indoor units is 40 m or less, however it can be extended up to 90 m if all the following conditions are fulfilled.

Required conditions	Example drawings	
It is necessary to increase the pipe size of the liquid and suction gas pipe if the pipe length between the first and the final branch kit is over 40 m (reducers must be procured on site). Increasing the HP/LP gas pipe size is not allowed. ■ If the increased liquid pipe size is larger than the pipe size of the main liquid pipe, then the pipe size of the main liquid pipe needs to be increased as well. ■ If the increased suction gas pipe size is larger than the pipe size of the main suction gas pipe, then the allowable length after the first refrigerant branch kit may not be increased to 90 m. Size-up of the main suction gas pipe may affect a good oil return to the outdoor unit due to influence of the HP/LP gas pipe.	indoor unit **8**: b+c+d+e+f+g+p≤90 m increase the pipe size of b, c, d, e, f, g	Increase the pipe size as follows
For calculation of total extension length, the actual length of above pipes must be doubled (except length of main pipes and of pipes which do not have an increased pipe size).	a+b*2+c*2+d*2+e*2+f*2+g*2 +h+i+j+k+l+m+n+p≤1000 m	
Indoor unit to the nearest branch kit ≤40 m	h, i, j..... p≤40 m	
The difference between the distance of the outdoor unit to the farthest indoor unit and the distance of the outdoor unit to the nearest indoor unit ≤40 m	The most remote indoor unit **8** The nearest indoor unit **1** (a+b+c+d+e+f+g+p)–(a+h)≤40 m	

Gas side	
REYQ18~22	Ø28.6 → Ø31.8[(a)]
REYQ24	Ø34.9 —
REYQ26~34	Ø34.9 → Ø38.1[(a)]
REYQ36~48	Ø41.3 —
REYHQ16+20+22	Ø28.6 → Ø31.8[(a)]
REYHQ24	Ø34.9 —

— Increase is not allowed

(a) If not available, increase is not allowed

Liquid side
Ø9.5 → Ø12.7
Ø12.7 → Ø15.9
Ø15.9 → Ø19.1
Ø19.1 → Ø22.2

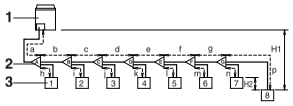

1 Outdoor unit
2 Refnet joints (a~g)
3 Indoor units (1~8)

13 Installation

13 - 3 Refrigerant Pipe Selection

Example of connection (Connection of 8 indoor units)			**Branch with refnet joint**	**Branch with refnet joint and refnet header**	**Branch with refnet header**
Outdoor unit side (3 pipes): Suction gas pipe, High pressure/low pressure gas pipe, Liquid pipe — BS unit — Indoor unit side (2 pipes): Gas pipe, Liquid pipe		Single outdoor unit system (REYQ8~16)	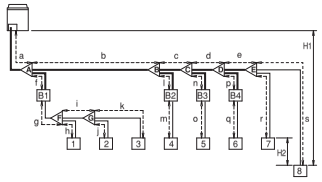	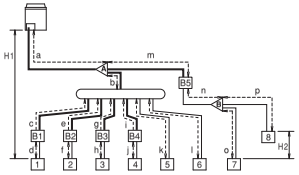	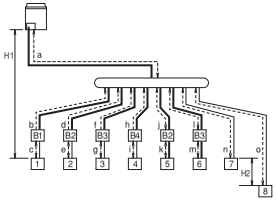
Maximum allowable length	Between outdoor and indoor units	Actual pipe length	Pipe length between outdoor and indoor units ≤165 m		
			[Example] unit 8: a+b+c+d+e+s≤165 m	[Example] unit 6: a+b+l≤165 m, unit 8: a+m+n+p≤165 m	[Example] unit 8: a+o≤165 m
		Equivalent length	Equivalent pipe length between outdoor and indoor units ≤190 m (Assume equivalent pipe length of the refnet joint to be 0.5 m, of the refnet header to be 1.0 m, of the BSVQ100 and BSVQ160 to be 4 m and of the BSVQ250 to be 6 m (for calculation purposes)) (See note 1 on next page)		
		Total extension length	Total piping length from outdoor to all indoor units ≤1000 m		
Allowable height difference	Between outdoor and indoor units		Difference in height between outdoor and indoor units (H1)≤50 m (≤40 m if outdoor unit is located in a lower position).		
	Between indoor and indoor units		Difference in height between adjacent indoor units (H2)≤15 m		
Allowable length after the branch		Actual pipe length	Pipe length from first refrigerant branch kit (either refnet joint or refnet header) to indoor unit ≤40 m (See note 2 on next page)		
			[Example] unit 8: b+c+d+e+s≤40 m	[Example] unit 6: b+l≤40 m, unit 8: m+n+p≤40 m	[Example] unit 8: o≤40 m

1 indoor unit — refnet joint — refnet header — Outdoor unit side (3 pipes) — Indoor unit side (2 pipes)

Refrigerant branch kit selection

⚠ Refrigerant branch kits can only be used with R410A.

How to select the refnet joint

When using refnet joints at the first branch counted from the outdoor unit side, choose from the following table in accordance with the capacity of the outdoor unit (example: refnet joint A).

Outdoor unit capacity type (Hp)	Refrigerant branch kit name
8+10	KHRQ23M29T9
12~16	KHRQ23M64T

For refnet joints other than the first branch, select the proper branch kit model based on the total capacity index of all indoor units connected after the refrigerant branch.

Indoor capacity type	Refrigerant branch kit name	
	3 pipes	2 pipes
<200	KHRQ23M20T	KHRQ22M20T
200≤x<290	KHRQ23M29T9	KHRQ22M29T
290≤x<640	KHRQ23M64T	KHRQ22M64T
≥640	KHRQ23M75T	KHRQ22M75T

How to select the refnet header

Choose from the following table in accordance with the total capacity of all the indoor units connected below the refnet header.

Note: 250 type indoor unit can not be connected lower than the refnet header.

Indoor capacity type	Refrigerant branch kit name	
	3 pipes	2 pipes
<200	KHRQ23M29H	KHRQ22M29H
200≤x<290	KHRQ23M29H	KHRQ22M29H
290≤x<640	KHRQ23M64H	KHRQ22M64H
≥640	KHRQ23M75H	KHRQ22M75H

Example of downstream indoor units	[Example] in case of refnet joint C: indoor units 5+6+7+8	[Example] in case of refnet joint B: indoor units 7+8, in case of refnet header: indoor units 1+2+3+4+5+6	[Example] in case of refnet header: indoor units 1+2+3+4+5+6+7+8

13 Installation

13 - 3 Refrigerant Pipe Selection

Pipe size selection
For an outdoor unit, select the pipe size in accordance with the following figure.

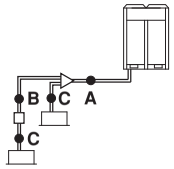

A. Piping between outdoor unit and refrigerant branch kit
Choose from the following table in accordance with the outdoor unit total capacity type, connected downstream.

Outdoor unit capacity type (Hp)	Piping outer diameter size (mm)		
	Suction gas pipe	HP/LP gas pipe	Liquid pipe
8	19.1	15.9	9.5
10	22.2	19.1	9.5
12	28.6	19.1	12.7
14+16	28.6	22.2	12.7

C. Piping between refrigerant branch kit or BS unit and indoor unit
Choose from the following table in accordance with the capacity type of the connected indoor unit.

Indoor unit capacity type	Piping outer diameter size (mm)	
	Suction gas pipe	Liquid pipe
20, 25, 32, 40, 50	12.7	6.4
63, 80, 100, 125	15.9	9.5
200	19.1	9.5
250	22.2	9.5

B. Piping between refrigerant branch kit and BS unit
Pipe size for direct connection to indoor unit must be the same as the connection size of indoor unit.
Choose from the following table in accordance with the indoor unit total capacity type, connected downstream.

Indoor unit capacity type	Piping outer diameter size (mm)		
	Suction gas pipe	HP/LP gas pipe	Liquid pipe
<150	15.9	12.7	9.5
150≤x<200	19.1	15.9	9.5
200≤x<290	22.2	19.1	9.5
290≤x<420	28.6	19.1	12.7
420≤x<640	28.6	28.6	15.9
640≤x<920	34.9	28.6	19.1
≥920	41.3	28.6	19.1

How to calculate the additional refrigerant to be charged
Additional refrigerant to be charged R (kg)
R should be rounded off in units of 0.1 kg

$$\mathbf{R} = \left[\begin{array}{l}[(X_1 \times \mathbf{Ø22.2})\ x0.37] + [(X_2 \times \mathbf{Ø19.1})\ x0.26] + [(X_3 \times \mathbf{Ø15.9})\ x0.18] + \\ [(X_4 \times \mathbf{Ø12.7})\ x0.12] + [(X_5 \times \mathbf{Ø9.5})\ x0.059] + [(X_6 \times \mathbf{Ø6.4})\ x0.022]\end{array}\right] \times 1.02 + 3.6 + \mathbf{A}$$

	A
>100% ≤130%	**0.5** kg

$\mathbf{X}_{1..6}$ = Total length (m) of liquid piping size at **Øa**
A = Weight according to table A in function of indoor unit connection ratio

Note 1

When the equivalent pipe length between outdoor and indoor units is 90 m or more, the size of the main liquid pipe must be increased. Never increase suction gas pipe and HP/LP gas pipe sizes.
Depending on the length of the piping, the capacity may drop, but even in such a case it is possible to increase the size of the main liquid pipe.

Hp	Ø
8+10	9.5 → 12.7
12~16	12.7 → 15.9

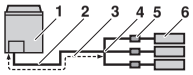

1 Outdoor unit
2 Main pipes
3 Increase only liquid pipe size
4 First refrigerant branch kit
5 BS unit
6 Indoor unit

Note 2

Allowable length after the first refrigerant branch kit to indoor units is 40 m or less, however it can be extended up to 90 m if all the following conditions are fulfilled.

Required conditions	Example drawings	
It is necessary to increase the pipe size of the liquid and suction gas pipe if the pipe length between the first and the final branch kit is over 40 m (reducers must be procured on site). Increasing the HP/LP gas pipe size is not allowed. ■ If the increased liquid pipe size is larger than the pipe size of the main liquid pipe, then the pipe size of the main liquid pipe needs to be increased as well. ■ If the increased suction gas pipe size is larger than the pipe size of the main suction gas pipe, then the allowable length after the first refrigerant branch kit may not be increased to 90 m. Size-up of the main suction gas pipe may affect a good oil return to the outdoor unit due to influence of the HP/LP gas pipe.	indoor unit **8**: b+c+d+e+f+g+p≤90 m increase the pipe size of b, c, d, e, f, g	Increase the pipe size as follows Gas side: REYQ8 Ø19.1 → Ø22.2; REYQ10 Ø22.2 → Ø25.4[(a)]; REYQ12+14 Ø28.6 —; REYQ16 Ø28.6 → Ø31.8[(a)] Liquid side: Ø9.5 → Ø12.7; Ø12.7 → Ø15.9; Ø15.9 → Ø19.1; Ø19.1 → Ø22.2 — Increase is not allowed (a) If not available, increase is not allowed
For calculation of total extension length, the actual length of above pipes must be doubled (except length of main pipes and of pipes which do not have an increased pipe size).	a+b*2+c*2+d*2+e*2+f*2+g*2 +h+i+j+k+l+m+n+p≤1000 m	
Indoor unit to the nearest branch kit ≤40 m	h, i, j..... p≤40 m	
The difference between the distance of the outdoor unit to the farthest indoor unit and the distance of the outdoor unit to the nearest indoor unit ≤40 m	The most remote indoor unit **8** The nearest indoor unit **1** (a+b+c+d+e+f+g+p)−(a+h)≤40 m	

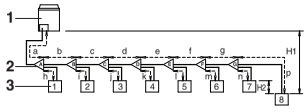

1 Outdoor unit
2 Refnet joints (a~g)
3 Indoor units (1~8)

14 Operation range

14 - 1 Operation Range

REYQ-P8/P9

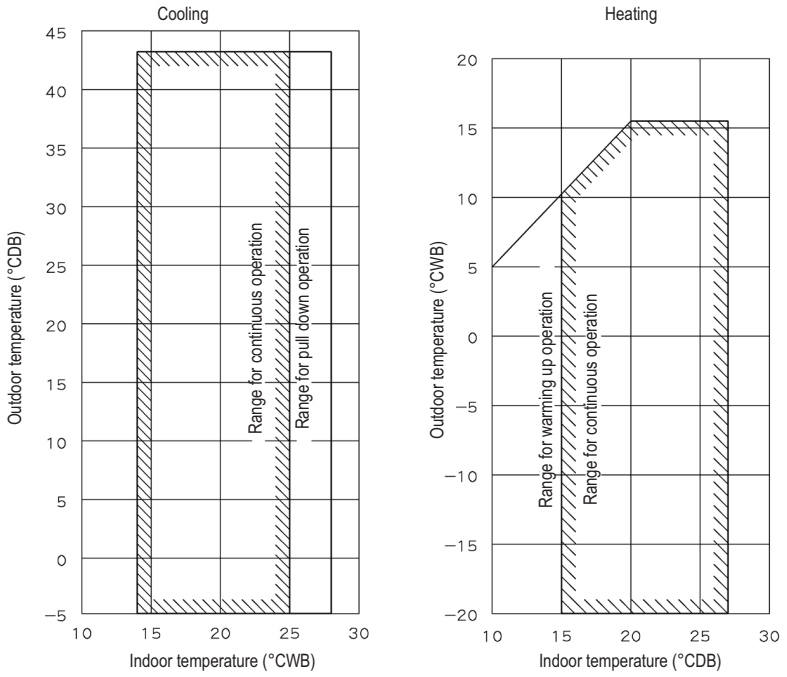

3D039566X

VRV® products are not within the scope of the Eurovent certification programme.

The present leaflet is drawn up by way of information only and does not constitute an offer binding upon Daikin Europe N.V.. Daikin Europe N.V. has compiled the content of this leaflet to the best of its knowledge. No express or implied warranty is given for the completeness, accuracy, reliability or fitness for particular purpose of its content and the products and services presented therein. Specifications are subject to change without prior notice. Daikin Europe N.V. explicitly rejects any liability for any direct or indirect damage, in the broadest sense, arising from or related to the use and/or interpretation of this leaflet. All content is copyrighted by Daikin Europe N.V.

BARCODE

Daikin products are distributed by:

DAIKIN EUROPE N.V. Naamloze Vennootschap - Zandvoordestraat 300, B-8400 Oostende - Belgium - www.daikin.eu - BE 0412 120 336 - RPR Oostende

EEDEN13-200_4 • 04/13 • Copyright Daikin
The present publication supersedes EEDEN12-200