BELLWAY HOMES LIMITED

aspect arboriculture

PORTMAN ROAD

READING

BERKSHIRE

Arboricultural Method Statement

October 2018
9404_AMS.001 Rev B

COPYRIGHT

The copyright of this document remains with Aspect Arboriculture trading division of Aspect Landscape Planning Ltd. The contents of this Document therefore must not be copied or reproduced in whole or in part for any purpose without the written consent of Aspect Arboriculture trading division of Aspect Landscape Planning Ltd.

Aspect Arboriculture
Hardwick Business Park
Noral Way
Banbury
Oxfordshire
OX16 2AF

t 01295 276066
f 01295 265072

e info@aspect-arbor.com
w www.aspect-arbor.com

CONTENTS

1. Introduction 1
1.1 Background 1
1.2 Scope 1
1.3 Limitations 2

2. Essential Work 2
2.1 Tree Protection Plan 2
2.2 Tree Removals 3
2.3 Pruning Works 3
2.4 Protective Barriers and Ground Boarding 4
2.5 Supervised Excavation 5
2.6 Proposed Order of Works 6
2.7 Site Manager's Point of Contact for Arboricultural Input 7
3. Conclusions 7

APPENDICES

Tree Protection Plan Appendix A
Works Auditing Schedule Appendix B
Tree Survey Schedule Appendix C
Tree Protection Barrier Specifications Appendix D

1 INTRODUCTION

1.1 Background

1.1.1 Aspect Arboriculture are instructed by Bellway Homes Limited, to prepare an Arboricultural Method Statement (hereafter the AMS) to inform proposals for the residential redevelopment of land off Portman Road, Reading, Berkshire.

1.1.2 Permission for the development has been granted subject to Conditions (application ref: 180319). Condition 4 includes the requirement for the scheme to clearly identify trees to be removed and demonstrate the protection of retained trees during the development works. This AMS and Tree Protection Plan has been prepared in direct response to this request, and includes consideration for proposed services, drainage and finished floor/ground levels.

1.1.3 Condition 4 reads: *'No development shall take place, including any works of Demolition, until an Arboricultural Method Statement and Tree Protection Plan in accordance with the relevant recommendations of appropriate British Standards or other recognised Codes of Good Practice for all existing trees that are not shown as being removed on the approved drawings, both within and adjacent to the site, has been submitted to and been approved in writing by the local planning authority. The development shall not be carried out other than in accordance with the approved Arboricultural Method Statement and Tree Protection Plan.*

Reason: to ensure that appropriate protection is given to trees of amenity value within and adjacent to the site in accordance with Policy CS38'.

1.1.4 It is our understanding that this work will be submitted to, and approved by, Reading Borough Council (hereafter the Council), prior to the commencement of any development works on site. Once approved, the works should be implemented as specified and maintained to the Council's satisfaction until completion of the development.

1.1.5 The confident protection of retained trees will be achieved through the use of the appended Tree Protection Plan (Appendix A) and Works Auditing Schedule (Appendix B) alongside other supporting documents included within Appendices C and D.

1.2 Scope

1.2.1 This work relates to arboriculture therefore reliance should not be given to comments made in respect of other disciplines i.e. civil engineering or construction phasing, without first referencing an appropriate expert.

1.3 Limitations

1.3.1 This document has been prepared in to inform safeguarding measures during development and should not be interpreted as a report on tree health and safety. Reasonable effort has been made to identify visible defects whilst carrying out the tree survey (March 2017), however trees are prone to natural failure without warning; no guarantee can be made as to the absolute safety of any of the trees surveyed. Validity is assumed in the absence of inclement weather and no change to the trees' existing context.

2 ESSENTIAL WORK

2.1 Tree Protection Plan

2.1.1 The Tree Protection Plan provided in Appendix A will be relied upon during development works. It should be read in conjunction with the entirety of this document.

2.1.2 To prevent avoidable damage to retained trees or erroneous tree loss, a scaled A1 copy of the Tree Protection Plan, accompanied by a copy of this document will be provided to the Site Manager. This will ensure they are able to:

- Identify retained trees;
- Identify the correct locations for tree protection barriers and ground protection;
- Identify features of the site that must be prepared/installed under an arboricultural watching brief;
- Request attendance of the Project Arboriculturist on site for site monitoring and to provide advice in case of any emerging issue;
- Demonstrate compliance with the Council's consent for development by completing the Works Auditing Schedule (Appendix B).

2.2 Tree Removals

2.2.1 To implement the development proposals, it will be necessary to remove the trees detailed within Table 1 (below).

2.2.2 Table 1. Tree Removals.

Tree Removals	
T1-T6 Lime	**T35** and **T37** Leyland Cypress
T7 and **T8** London Plane	**T36** Hawthorn
T10-T12 and **G9** Alder	**T38** and **T44** Whitebeam
T21, T27, T32, G5 and **G6** Norway Maple	**T39** Snowy Mespil
T22 Cherry	**T40** and **T43** Box Elder
T23-T26, **T29** and **T30** Silver Birch	**G2, G3** and **G4** Lawson Cypress
T28 Sycamore	**G7** +Δ
T31 Goat Willow	**G8** +

Δ Denotes the partial clearance of a group of trees
+ Denotes mixed assemblage of three or more species refer to Appendix C

2.2.3 In addition to the removals listed within Table 1, it is recommended that G1, T13-T15, T33 and T45 are also removed, on account of their recognition as a category U specimens; demonstrated through poor structural and physiological condition. G1, T13-T15, T33 and T45 are under the control of Bellway Homes Limited.

2.2.4 Trees for removal will be spray marked with a red dot by the Project Arboriculturist. The presence of the appointed arboricultural contractor is also recommended during this process to safeguard against erroneous felling. The Site Manager will assume responsibility for arranging the attendance of the Project Arboriculturist for the purpose of marking trees to be removed.

2.2.5 Felling works should be timed to avoid the main nesting season for birds between 1st March and 31st August. If scheduled within this period an ecologist must be present to advise on any necessary protective measures, and on hand to confirm that tree works are not likely to cause disturbance to nesting birds.

2.2.6 This work should be undertaken in accordance with the principles within BS3998:2010 by a qualified and competent contractor to ensure that cuts are performed correctly and positioned so as to avoid damage/harm to surrounding retained trees.

2.3 Pruning Works

2.3.1 Pruning works are not required to accommodate the proposals, however to reduce the risk of future tree related hazards emerging, it is recommended that throughout the entire site, dead branches are removed from the canopies of retained trees. It would be prudent for this work to coincide with clearance works on account that access to the trees will be unimpeded.

2.3.2 The removal of deadwood must be undertaken in accordance with section 7.3 of BS3998:2010. A qualified and competent contractor should be employed to ensure that cuts are performed correctly, and positioned so as to avoid future structural defects or physiological issues, facilitate growth and maintain aesthetic value.

2.4 Protective Barriers and Ground Boarding

2.4.1 Tree protection barriers are required to safeguard retained tree cover from damage during construction and should consist of the default BS5837:2012 barrier specification (refer to Plate 1 below). The location for protective barriers has been informed by the retained trees' root protection areas and their canopy extents; locations are illustrated within Appendix A with a bold blue line.

2.4.2 Plate 1. Protective Barrier Specification

2.4.3 The erection of tree protection barriers will be phased in accordance with development activity. Where works are programmed (including demolition works), it is critical that protective fencing is erected in advance of works taking place and remain in-situ until completion of works within the area. The Project Arboriculturist will provide written confirmation to the Council's Arboricultural Officer on completion of the erection of the protective fencing.

2.4.4 Where barriers are to be relocated to a secondary position, to facilitate the erection of two cycle storage areas adjacent to T17, this is illustrated within appendix A with a dotted pink line. Upon completion of each area of construction works, tree protection fencing will be removed in preparation for external works and for soft landscaping to be implemented.

2.4.5 The Site Manager will be responsible for arranging attendance of the Project Arboriculturist, for the purpose of setting out barriers and for their monitoring at appropriate intervals for the duration of the development; issues will be resolved on site and reported to the Council's Arboricultural Officer by the Project Arboriculturist.

2.4.6 In addition to protective barriers, it will be necessary to install ground boarding adjacent to **T17**, **T18** and **T19**, to protect their RPAs from avoidable disturbance and compaction during construction works. This can be achieved through the use of polyethylene Trakmats (or similar), which are to be installed prior to commencement of construction works and are to remain in-situ until completion.

2.5 Supervised Excavation

2.5.1 To implement the development proposals, it will be necessary to carry out excavation works within the RPA of **T17**, to accommodate the introduction of two cycle storage units. To avoid harming T17, excavation works must be carried out manually and under arboricultural supervision adopting the principles within section 7.2 of BS5837:2012.

2.5.2 In addition to the above, where close board fences are to be introduced within the RPAs of **T17**, **T18**, **T19**, **T42**, **T47**, **T48** and **T49**, post holes must be manually excavated and lined with an impermeable membrane to prevent concrete leachate coming into contact with tree roots.

2.5.3 The extent of excavation works which are to be carried out under arboricultural supervision is illustrated within the Tree Protection Plan (Appendix A) with an orange wash, and areas where post holes must be lined with an impermeable membrane are illustrated with a solid pink line.

2.5.4 During the supervised excavation within their RPAs, the following procedure will be adopted:

i. The breaking up and clearance of the existing soils must be undertaken under arboricultural supervision, using a low impact method of excavation (i.e. using hand tools, an air-spade, or a vacuum excavator).

ii. During the works the protective bark of larger roots is not to be damaged.

iii. If necessary, roots that are less than 25mm diameter can to be pruned back, preferably to a side branch, using sharp cutting tools i.e. bypass secateurs or pruning saw.

iv. No roots over 25mm are to be severed without approval of the appointed Project Arboriculturist as they may be integral to tree health and stability. Exposed roots will be covered in hessian or clean top soil to protect from dehydration and temperature flux. Hessian is to be removed prior to backfilling.

v. Areas adjacent to roots that are to be filled with concrete will be lined with an impermeable membrane to prevent concrete leachate coming into contact with tree roots.

vi. Any use of an excavator to complete excavations must occur from outside of the RPAs (which will be spray-marked on the ground in advance of the works taking place). A toothless bucket will be utilised at all times.

vii. A record of exposed roots will be made and accompanied by a photographic log.

viii. Should any issues be raised during supervision then the arboriculturist will inform the developer and the Council's Arboricultural Officer, indicating the nature of the problem and recommendations for action required.

ix. Tree protection barriers are to be reinstated or repositioned on completion - whichever is within the interest of protecting RPAs. This is to be determined by the Project Arboriculturist.

x. Upon request, written confirmation of the works being undertaken to a satisfactory standard can be provided to the Site Manager and the Council's Arboricultural Officer by the Project Arboriculturist.

2.6 Proposed Order of Works

i. Pre-commencement site meeting between the Project Arboriculturist, Site Manager, tree contractor and the Council's Arboricultural Officer. Stages of tree removals and arboricultural auditing/monitoring requirements will be identified/agreed.

ii. Necessary tree removals as illustrated within Appendix A to be carried out prior to installation of tree protection barriers and commencement of demolition/construction works in the vicinity.

iii. Tree protection barriers are to be installed following removals and prior to demolition/construction works in the vicinity. Upon request, barrier positions can be set-out by the Project Arboriculturist, as detailed within this document.

iv. The Council's Arboricultural Officer shall be informed of the proposed commencement date as soon as possible, to allow the inspection of protection measures.

v. The Site Manager will assume responsibility for arranging the attendance of the Project Arboriculturist to oversee, relocation of barriers and excavation works within RPAs, as detailed with the works auditing schedule (Appendix B).

vi. The Site Manager will assume responsibility for arranging attendance of the Project Arboriculturist for the monitoring of barriers at appropriate intervals for the duration of the development works. Erection of barriers and monitoring is included within the works auditing schedule (Appendix B).

2.7 **Site Manager's Point of Contact for Arboricultural Input:**

A. Mr James Bardey (Aspect Arboriculture)
Principal Arboricultural Consultant
Telephone: 01295 276066
Email: James.Bardey@aspect-arbor.com

B. Mr Patrick Haythornthwaite (Aspect Arboriculture)
Arboricultural Consultant
Telephone: 01295 276066
Email: Patrick.Haythornthwaite@aspect-arbor.com

3 CONCLUSIONS

3.1 This document has been prepared in response to Condition 4 of the planning consent for the residential redevelopment of land of Portman Way, Reading, Berkshire (application ref: 180319). It has been informed by guidance provided in BS5837:2012 including details of the site's existing trees.

3.2 Pursuant to the instruction, this document and its supporting work (Appendices A - D) identifies all features of the development that must be managed to facilitate confident tree retention during the construction process.

3.3 To ensure confident tree retention, siting of tree protection barriers and specified excavation works must be audited by the Project Arboriculturist; the outcome of these works will be reported to the Council's Arboricultural Officer on completion. These areas are specified within the works auditing schedule (Appendix B).

3.4 It is Aspect's opinion that, subject to strict adherence to this document, the construction works can be undertaken without incurring harm to retained trees.

APPENDICES

APPENDIX A

TREE PROTECTION PLAN (9404 TPP 01 Rev E)

T1-T6: Removal recommended to facilitate demolition and ground remediation. (subject to mitigation proposals).

T17-T19 & T52: Proposed boundary fence post holes within RPA to be manually excavated under arboricultural supervision.

Post holes to be lined with an impermeable membrane to prevent concrete leachate coming into contact with tree roots.

T31, T32, T35-T37 & G9: Removal to accommodate higher quality co-ordinated landscape scheme.

T17-T19: Ground boarding to be positioned between proposed building footprint and tree protection barriers.

T17: Footprint of proposed cycle stores within RPA to be manually excavated under direct arboricultural supervision. Tree protection barriers to be relocated to secondary position during construction.

T47-T49: Proposed boundary fence post holes within RPA to be manually excavated under arboricultural supervision.

Post holes to be lined with an impermeable membrane to prevent concrete leachate coming into contact with tree roots

T42: Proposed garden fence post holes within RPA to be manually excavated under arboricultural supervision.

Post holes to be lined with an impermeable membrane to prevent concrete leachate coming into contact with tree roots

T46: Retained as a key feature on approach from the north.

Default Barrier Specification, cited BS 5837:2012

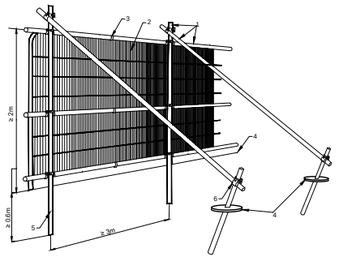

Key

1 Standard scaffold poles
2 Heavy gauge 2m tall galvanized tube and welded mesh infill panels
3 Panels secured to uprights and cross-members with wire ties
4 Ground level
5 Uprights driven into the ground until secure (minimum depth 0.6m)
6 Standard scaffold clamps

1:1000 @ A3

0m 10m 20m 40m

KEY:

- 15 Tree Numbers
- Tree Canopies
- [8] Category 'U' Trees
- [8] Category 'U' Trees Removed
- Category 'B' RPA
- Category 'C' RPA
- Tree Protection Barrier
- Tree Protection Barrier (2nd Position)
- Manual Excavation
- Ground Boarding
- Fence Post Holes Within RPA
- 7 Trees to be Removed
- 15α Tree Subject to Tree Preservation Order Ref:103/003 (A1)

Aerial cited from Google Earth

REV	DATE	NOTE	Drawn	Chk'd

REVISIONS

aspect arboriculture

TITLE

Portman Road, Reading
Tree Protection Plan

CLIENT

Bellway Homes

SCALE	DATE	DRAWN
1:1000 @ A3	SEP 2018	GW/RO

DRAWING NUMBER	REVISION
9404 TPP 01 Rev E	E

Based on proposed layout ref: 031610-BEL-TV-01-22.01.18.dwg

APPENDIX B

WORKS AUDITING SCHEDULE

Works Auditing Schedule

Works Requiring Auditing	Tree No.	Date Undertaken	Date Reported to LPA
1. Pre-commencement meeting identifying tree removals, pruning works, tree protection barrier locations and ground protection as specified within 9404_AMS.001 Rev A and illustrated on drawing no. 9404_TPP.01 Rev E.	As drawn		
2: Inspection of tree protection barriers and ground boarding, prior to commencement of development works by council's arboricultural officer/project arboriculturist.	As drawn		
3: Supervised Excavation Works within RPAs:	T17		
Inspection of installed tree protection barriers as specified within 9404_AMS.001 Rev A and illustrated on drawing no. 9404_TPP.01 Rev E, on an appropriate basis.	As drawn		

This schedule will be completed as evidence that works have been undertaken as per the approved methodology.

APPENDIX C

TREE SURVEY SCHEDULE (9404 TS 01 Rev A)

aspect arboriculture

BS 5837:2012 Tree Schedule: Portman Road, Reading

9404 TS 01 Rev A

aspect arboriculture

BS5837:2012 Tree Survey: Explanation of Survey Criteria

*Area around tree deemed to contain sufficient roots and rooting volume to maintain the tree's viability, and where the protection of roots and soil structure is a priority. *The RPA has been manipulated to allow for various site features, i.e. roads, structures or changes in levels. Please refer to the Tree Constraints Plan for these changes.*

e.g.: young, semi-mature, early-mature, mature or over-mature

Sequential reference number cited on all aspect drawing.

Category prefix A-C denotes arboricultural quality, decreasing from A (high) to C (low); Subcategories 1, 2 and 3 highlight associated arboricultural (1), landscape (2) and ecological (3) qualities.

Height and Crown spread measured to the nearest half meter; # denotes where this is estimated.

Category U trees are those in such a condition that they cannot be realistically retained as living trees in the current context for the long term.

Tree Number	Common Species Name	Trunk Diameter (mm)	Height (m)	Crown Spread (m)					Crown Clearance (m)	Life Stage	Physiological Condition	Structural Condition	Comments	BS5837 Category	RPA Radius (m)
				N	E	S	W	radial							

Measured to the nearest 10mm; # denotes estimated diameter where access is not possible.

e.g.: above-average, average, below average or dead

General observations, i.e. defects, preliminary management recommendation, presence of pests/disease, perceived significance.

Height of first significant branch and/or canopy

e.g.: good, indifferent, poor, or hazardous

Colour band key:

Category A
Category B
Category C
Category U

The following survey should not be interpreted as a report on tree health and safety. Aspect's opinion of tree condition and structural potential is valid for a limited period of 12 months from the date of inspection. Validity is assumed in the absence of inclement weather and no change to the trees existing setting.

Tree Number	Common Species Name	Trunk Diameter (mm)	Height (m)	Crown Spread (m) N	E	S	W	Radial	Crown Clearance (m)	Life Stage	Physiological Condition	Structural Condition	Comments	BS5837 Category	RPA Radius (m)
1	Lime	370#	10.5m					5	2	Early Mature	Average	Indifferent	Inaccessible at time of survey due to recent fire, trunk diameter estimated Single stem maintains single leader for majority of height Structure typical for species	B2	4.5
2	Lime	320#	10.5m					4	2	Early Mature	Average	Indifferent	Inaccessible at time of survey due to recent fire, trunk diameter estimated Single stem maintains single leader for majority of height Structure typical for species	B2	3.9
3	Lime	320#	10.5m					4.5	2	Early Mature	Average	Indifferent	Inaccessible at time of survey due to recent fire, trunk diameter estimated Single stem maintains single leader for majority of height Structure typical for species	B2	3.9
4	Lime	410#	10.5m					5.5	2	Early Mature	Average	Indifferent	Inaccessible at time of survey due to recent fire, trunk diameter estimated Single stem maintains single leader for majority of height Structure typical for species	B2	4.8
5	Lime	450#	11.5m					5.5	2	Early Mature	Average	Indifferent	Inaccessible at time of survey due to recent fire, trunk diameter estimated Single stem maintains single leader for majority of height Basal wound to northwest measuring approx. 300mm vertically and 50 mm horizontally Structure typical for the species	B2	5.4
6	Lime	390#	11.5m					5.5	2.5	Early Mature	Average	Indifferent	Inaccessible at time of survey due to recent fire, trunk diameter estimated Single stem maintains single leader for majority of height Structure typical for species	B2	4.8
7	London Plane	80#	6m					4	1	Young	Average	Indifferent	Inaccessible at time of survey due to recent fire, trunk diameter estimated Establishing ornamental planting Structure typical for species	B2	0.9
8	London Plane	80#	6m					2.5	1	Young	Average	Indifferent	Inaccessible at time of survey due to recent fire, trunk diameter estimated Establishing ornamental planting Structure typical for species	B2	0.9
10	Alder	400#	17m					4.5	2	Early Mature	Average	Indifferent	Inaccessible at time of survey due to recent fire, trunk diameter estimated Single stem maintains single leader for majority of height Structure typical for species	B2	4.8
11	Alder	350#	16m					5	2	Early Mature	Average	Indifferent	Inaccessible at time of survey due to recent fire, trunk diameter estimated Single stem maintains single leader for majority of height Structure typical for species	B2	4.2
12	Alder	340#	16m					5.5	2	Early Mature	Average	Indifferent	Inaccessible at time of survey due to recent fire, trunk diameter estimated Single stem maintains single leader for majority of height Structure typical for species	B2	4.2
13	Elder	6*50#	5m#					3.5#	0.5#	Early Mature	Average	Indifferent	Inaccessible at time of survey due to recent fire, all information taken from previous Aspect Arboriculture survey, carried out October 2013 Multi stemmed from base, growing out of crack in concrete Of low arboricultural quality and considered to be of reduced future potential	U	N/A

Tree Number	Common Species Name	Trunk Diameter (mm)	Height (m)	Crown Spread (m) N	E	S	W	Radial	Crown Clearance (m)	Life Stage	Physiological Condition	Structural Condition	Comments	BS5837 Category	RPA Radius (m)
14	Elder	7*50#	5m#					3.5#	0.5#	Early Mature	Average	Indifferent	Inaccessible at time of survey due to recent fire, all information taken from previous Aspect Arboriculture survey, carried out October 2013 Multi stemmed from base, growing out of crack in concrete Of low arboricultural quality and considered to be of reduced future potential	U	N/A
15	Elder	6*50#	5m#					3.5#	0.5#	Early Mature	Average	Indifferent	Inaccessible at time of survey due to recent fire, all information taken from previous Aspect Arboriculture survey, carried out October 2013 Multi stemmed from base, growing out of crack in concrete Of low arboricultural quality and considered to be of reduced future potential	U	N/A
17	Silver Birch	620 oi	14m	8	6#	8.25	7		4	Mature	Below Average	Poor	Single stem maintains single leader for majority of height Above average amount of deadwood and die back at tips Structure obscured by ivy Considered to be in a state of terminal decline	U	N/A
18	Silver Birch	2*300#	15.5m					3.5	5	Early Mature	Average	Poor	Single stem forking at c. 1.5m Structure appears typical for species Unable to inspect base and trunk due to ivy cover	C12	5.1
19	Silver Birch	350 oi	11.5m					3.75	3	Early Mature	Below Average	Indifferent	Single stem maintains single leader Structure typical for species Previous unsympathetic pruning	C12	4.2
21	Norway Maple	200	8m	1.75	1	3.5	4.25		3	Semi Mature	Average	Poor	Single stem Cohesive canopy with T22 Of low arboricultural quality	C12	2.4
22	Cherry	225	8m	4.25	4.5	4.75	1.5		2	Semi Mature	Average	Poor	Single stem Cohesive canopy with T21 Of low arboricultural quality	C12	2.7
23	Silver Birch	300	14.5m	0	1	4	2.25		2	Early Mature	Average	Poor	Single stem maintains single leader for majority of height Leans to south due to suppression from G4 to north	C12	3.6
24	Silver Birch	220	14m	0.5	4.5	4.75	2.5		2	Semi Mature	Average	Poor	Single stem maintains single leader for majority of height Leans to south due to suppression from G4 to north	C12	2.7
25	Silver Birch	275	9m	4.5	5.5	45	3		1	Semi Mature	Average	Poor	Single stem maintains single leader Structure typical for species Previous unsympathetic pruning	C12	3.3
26	Silver Birch	210	9m	2.5	3.5	5	3		1	Semi Mature	Average	Indifferent	Single stem maintains single leader Structure typical for species Previous unsympathetic pruning	C12	2.4
27	Norway Maple	605	13m	7	6.75	8	6#		2.5	Mature	Average	Indifferent	Single stem forking at c. 2m into 2 scaffold limbs Fairly radial crown Principal arboricultural feature on site	B2	7.2
28	Sycamore	8*200	11.5m					6.00	1	Early Mature	Average	Poor	Multi stemmed from base, growing through fence Of low arboricultural quality	C12	6.9
29	Silver Birch	465	20m					4	1	Early Mature	Average	Indifferent	Single stem maintains single leader for majority of height Growing with base touching existing building Structure and habit typical for species	C12	5.7
30	Silver Birch	500#	18m					5.5	2	Mature	Average	Indifferent	Unable to access stem to inspect Stem obscured by ivy appears to maintain single leader for majority of height Structure typical for species	C12	6
31	Goat Willow	265	8m					4.75	1.5	Semi Mature	Average	Indifferent	Single stem forking at c. 1m Structure typical for species	C12	3.3
32	Norway Maple	500#	11.5m					7m	2	Early Mature	Average	Poor	Single stem, structure heavily obscured by ivy, appears to fork at c. 3m Canopy appears sparse Of low arboricultural quality	C12	6

Tree Number	Common Species Name	Trunk Diameter (mm)	Height (m)	Crown Spread (m) N	E	S	W	Radial	Crown Clearance (m)	Life Stage	Physiological Condition	Structural Condition	Comments	BS5837 Category	RPA Radius (m)
33	Alder	640#	12m#					6#	3#	Mature	Below Average	Poor	Appears to have failed at base and fallen, now hung up against adjacent building	U	N/A
35	Leyland Cypress	900#	16m#					5#	1#	Mature	Average	Indifferent	Inaccessible due to dense understory scrub Single stem forking at c. 2m, included bark at union Structure appears typical for species	C12	10.8
36	Hawthorn	170#	6m#					3#	1#	Early Mature	Average	Indifferent	Inaccessible due to dense understory scrub Single stem forking at c. 1.5m Structure and habit appear typical for species	C12	2.1
37	Leyland Cypress	800#	16m#					7#	1#	Mature	Average	Indifferent	Inaccessible due to dense understory scrub Single stem maintains single leader Structure appears typical for species	C12	9.6
38	Whitebeam	385	7.5m	6	5.25	5.25	5.75		2	Early Mature	Below Average	Poor	Established ornamental planting Significant bark damage to the lower trunk Canopy appears sparse with die back at tips Above average deadwood Considered to be of low arboricultural quality and reduced future potential	C12	4.5
39	Snowy Mespil	3*75	4m					4.25	1.75	Semi Mature	Average	Poor	Establishing ornamental planting Unremarkable example of the species Of low arboricultural quality	C12	1.5
40	Box Elder	165 175	7m	3	4	5	4		2	Semi Mature	Average	Poor	Co-dominant union at c. 1m Unbalanced structure Limited visibility within the wider locality	C12	3
41	Rowan	185	7m	2	2.75	3.75	3.5		2	Semi Mature	Average	Indifferent	Establishing ornamental planting Unremarkable example of the species Of low arboricultural quality	C12	2.1
42	Rowan	140	5m	2.25	2.5	2.5	2		2	Semi Mature	Average	Indifferent	Establishing ornamental planting Unremarkable example of the species Of low arboricultural quality	C12	1.8
43	Box Elder	375	9m	6.75	5.75	6	5.75		2	Early Mature	Average	Indifferent	Single stem forking at c. 1.75m into a wide spreading scaffold structure Limited visibility within the wider locality	C12	4.5
44	Whitebeam	290	8m	3.75	3.25	4.25	3.25		2	Early Mature	Average	Poor	Established ornamental planting Unbalanced scaffold structure Unremarkable example of the species	C12	3.6
45	Cherry	220	5m					1.5		Semi Mature	Dead	Poor	Standing dead wood at time of survey	U	N/A
46	Swedish Birch	400	16m					4.5	3	Early Mature	Average	Indifferent	Established ornamental planting Structure typical for the species Moderate example of the species whilst maturing	B1	4.8
47	Silver Birch	150#	8m					1.75	3	Semi Mature	Average	Indifferent	Inaccessible, offsite within neighbouring residential garden Establishing ornamental planting Unremarkable example of the species	C12	1.8
48	Cherry	170#	7m					3	3	Semi Mature	Average	Indifferent	Inaccessible, offsite within neighbouring residential garden Establishing ornamental planting Unremarkable example of the species	C12	2.1
49	Cherry	150#	7m					2	3	Semi Mature	Average	Indifferent	Inaccessible, offsite within neighbouring residential garden Establishing ornamental planting Unremarkable example of the species	C12	1.8
50	Field Maple	120#	6m					2	2	Semi Mature	Average	Indifferent	Offsite, establishing ornamental planting sited within shrub bed Unremarkable example of the species	C12	1.5
51	Smoke Bush	130 2*100	3m					2.5	0.5	Young	Average	Indifferent	Establishing ornamental planting Unremarkable example of the species Of low arboricultural quality	C12	2.4

Tree Number	Common Species Name	Trunk Diameter (mm)	Height (m)	Crown Spread (m) N	E	S	W	Radial	Crown Clearance (m)	Life Stage	Physiological Condition	Structural Condition	Comments	BS5837 Category	RPA Radius (m)
52	Sycamore	120 90#	9m					2.5	2	Young	Average	Indifferent	Establishing self set specimen Unremarkable example of the species Of low arboricultural quality	C12	1.8
G1	Goat Willow	7*90#	6m					4.25#	1#	Semi Mature	Below Average	Poor	2no. Multi stemmed Goat Willow In a state of partial collapse Of low arboricultural quality and reduced future potential	U	N/A
G2	Lawson Cypress	300 av	15m av					7.5 max	1 av	Early Mature	Average	Indifferent	Belt of established ornamental plantings form cohesive canopy Likely to provide dense screening filtering views from eastern to western areas of site	C12	3.6
G3	Lawson Cypress	345 av	16.5m av					7.5 max	1 av	Early Mature	Average	Indifferent	Belt of established ornamental plantings form cohesive canopy Eastern extent appears to have previously had a tree removed, bare canopy at eastern end Otherwise structures typical for species Likely to provide screening of site from adjacent Portman Road to north	C12	4.2
G4	Lawson Cypress	345 av	15.5m av					7.5	1	Early Mature	Average	Indifferent	Belt of established ornamental plantings form cohesive canopy Western extent appears to have previously had a tree removed, bare canopy at western end Otherwise structures typical for species Likely to provide screening of site from adjacent Portman Road to north	C12	4.2
G5	Norway Maple	5*90 max	8m max					3.5 max	0.5 av	Young	Average	Poor	5 no. establishing multi stemmed self set specimens growing through fence Likely to provide limited screening of site from adjacent Portman Road to north	C12	2.4
G6	Norway Maple	3*220 max	10m max					4.75 max	1	Semi Mature	Average	Poor	3no. Establishing self set specimens growing next to disused fuel pump Structures typical for species within their current context	C12	4.5
G7	Elder Hazel Cherry Plum Goat Willow	2*200 3*120 max	9m max					4 max	1 av	Semi Mature	Average	Poor	Unmaintained parcel of established scrub on site boundary Provides a transient screen Of low arboricultural quality	C12	4.2
G8	Cherry Crab Apple Hornbeam	120# max	7m max					2.75 max	1.75 av	Young to Semi Mature	Average	Indifferent	Offsite collection of establishing ornamental plantings sited within a shrub bed Unremarkable examples of the species	C12	1.5
G9	Alder	230# max	10m max					3.75# max	2 av	Semi Mature	Average	Indifferent	3no. Establishing self set specimens Structures typical for species within their current context	C12	2.7

APPENDIX D

TREE PROTECTION BARRIER SPECIFICATIONS

Recommended Tree Protection Fencing Specification for this Development

(Source: BS 5837: 2012)

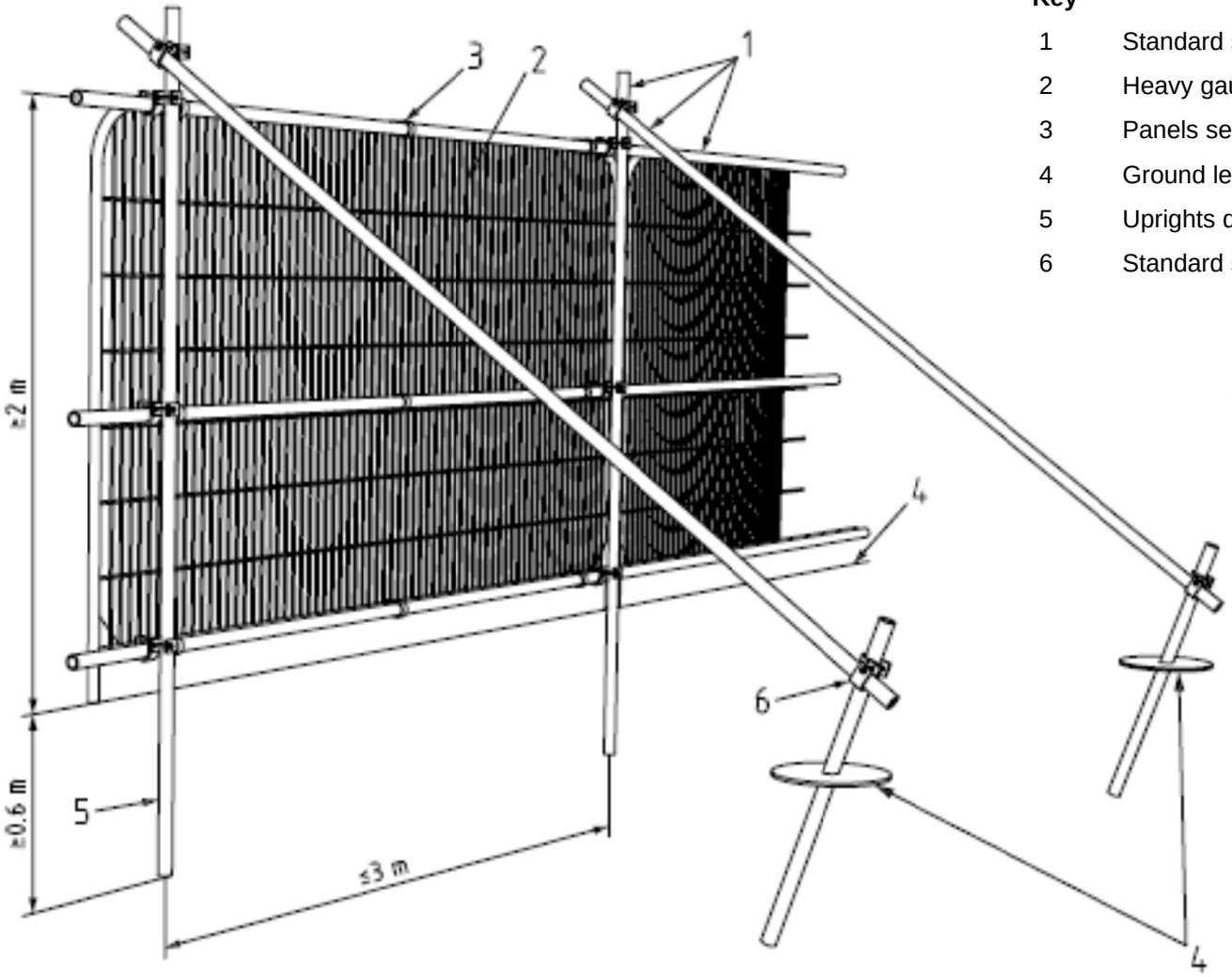

Key

1	Standard scaffold poles
2	Heavy gauge 2m tall galvanized tube and welded mesh infill panels
3	Panels secured to uprights and cross-members with wire ties
4	Ground level
5	Uprights driven into the ground until secure (minimum depth 0.6m)
6	Standard scaffold clamps

Notes:

- *Supports are to be sited tree side of the panel front face.*
- *All weather notices should be attached to every fourth panel highlighting the importance of the barrier in its correct position. An example is provided overleaf which may be duplicated for use on this development.*

aspect arboriculture

TREE PROTECTION BARRIER

- **DO NOT MOVE THIS FENCE**
- **NO SITE ACTIVITY TREE SIDE OF FENCE**
- **NO STORAGE TREE SIDE OF FENCE**

- **For assistance call Aspect Arboriculture: 01295 276066**

aspect arboriculture

landscape planning • ecology • arboriculture

aspect

Aspect Arboriculture
West Court
Hardwick Business Park
Noral Way
Banbury
Oxfordshire OX16 2AF

T: 01295 276066
F: 01295 265072
E: info@aspect-arbor.com
W: www.aspect-arbor.com