B. J. UNWIN FORESTRY CONSULTANCY

Jim Unwin **BScFor, MICFor, RCArborA, FArborA, CEnv.**

Chartered Forester
Arboricultural Association Registered Consultant
Fellow of the Arboricultural Association
Chartered Environmentalist.

Parsonage Farm
Longdon
Tewkesbury
Glos. GL20 6BD
UK
Telephone & Fax 01684 833538
Mobile 07860 376527
Email Jim@bjunwin.co.uk

Client: **Greyfriars Parochial Church Council,**
c/o JBKSArchitect,
Suite 1 Parkwood Stud, London Road, Aston Rowant, Oxfordshire, OX49 5SP. Tel 01844 350101.
architects@jbks.co.uk. www.jbks.co.uk

Site: **Greyfriars Church,**
Friar Street, Reading, RG1 1EH.

Subject: **BS5837 Tree Survey for NEW CHURCH HALL**
Including:-

- **Tree Constraints on any proposed development.**
- **Arboricultural Implications of development.**
- **Tree Retention & Protection Method Statement.**

Surveyor: Jim Unwin
Date: Oct 2019 Rev 27th Jan 2020

Notes:

Copyright: This report is copyright of BJUFC, and licensed only to the client, site and purpose(s) named above. It may not be assigned without the author's permission.

Limitation of Report:-The statements made in this Report do not take account of the effects of extremes of climate, vandalism or accident, whether physical, chemical or fire. BJUFC cannot therefore accept any liability in connection with these factors, nor where prescribed work is not carried out in a correct and professional manner in accordance with current good practice. The authority of this Report ceases at any stated time limit within it, or if none stated after two years from the date of the survey or when any site conditions change, or pruning or other works unspecified in the Report are carried out to, or affecting, the Subject Tree(s), whichever is the sooner.

Tree and Woodland Consultancy
Woodland Valuation and Timber Sales
Landscape Management

Visit our website: www **bjunwin.co.uk** for more information

Visual Tree Assessment

Greyfriars - Contents

1. Instruction

2. Objectives of Tree Survey

3. Survey

4. Results of Survey

4.1 Physical.
4.1.1 Site details.
4.1.2 Maintenance.
4.2 Landscape Setting of the Site.
4.2.1 Photos.
4.2.2 Land uses beyond the site:-
4.2.3 Prominence of the site in the local landscape:-
4.3 Trees, hedges and large shrubs on or near site.
4.3.1 Trees on site:-
4.3.2 Trees nearby:-
4.3.3 Visual Amenity of Trees.
4.4 Key to table.
4.5 Tree Survey Table.

5.0 Arboricultural Constraints, Impacts of proposed development on trees, and vice versa.

5.1 Proposed development.
5.2 Tree Constraints and Impacts.
5.3 Physical contact of above-ground parts of trees.
5.4 Below-ground root spread.
5.5 Shading.
5.6 Over-bearing & falling material.
5.7 Heave.

6. Arboricultural Method Statement for proposed development.

6.1 Supervision.
6.2 Tree Management.
6.2.1 Tree Work prior to ground work:-
6.2.2 Treework informatives.
6.3 Tree Protection.
6.3.1 Requirement.
6.3.2 Vertical Tree Protection.
6.3.3 Temporary Ground Protection.
6.4 Construction Access.
6.5 Demolition.
6.6 Foundations within RPA.
6.7 Drainage.
6.8 Service Trenches.
6.9 Minimal-dig construction for new access drive / parking.
6.10 Tree Work following construction and any hard landscaping of the site:-
6.11 New Landscaping.

References

Appendix I Location map.
II Constraints Plans for proposed development:-**Tree Plan. Root Protection Areas plan. Shading plan.**
III Photos x 6
IV Development plans.
V **Tree Retention & Protection Plan** for proposed development.
VI BS5837 Tree-protection Fencing.
VII Horizontal Ground Protection: Examples of plastic and aluminium ground guards.
VIII Compressed-Air Soil Knife.
IX Example of cellular-confinement tray system for reinforcing gravel parking & driveway.
X Cellweb Three-dimensional cellular confinement system.
XI B J Unwin Forestry Consultancy professional CV.

1. Instruction

1.1 In 2011 Jeremy Bell of JBKS Architects, asked B J Unwin Forestry Consultancy to advise on tree issues on a part of the Church site, subject to quote. Katie Duggan has asked us to re-visit and update our report. This is now Phase 2.

1.2 The local authority (Reading Borough Council) will require a tree impact assessment and tree protection method statement. They may require mitigation by new planting for trees lost as part of re-development of the site.

1.3 Therefore methodology of the report below follows *BS5837:2012 Trees in Relation to Design, Demolition & Construction - Recommendations*.

2. Objectives of Tree Survey

2.1 Objectives of Tree Survey:-

- To provide an accurate measured survey of significant trees to *BS5837:2012*.
- In addition, the site's trees have been considered in their landscape setting, and photos taken to show internal and external parts of the site from various viewpoints.
- The report aims to inform decision-making of Architects and Planners to:-
  -incorporate worthy trees within any development plans and associated landscape schemes,
  -protect them during development and
  -assist with planning of ongoing tree maintenance.
  Please note, BS5837 is an iterative process: which cannot all be included in one report.

Stage 1:- Tree survey and preliminary constraints plan (TSCP).

Stage 2 has several sequential phases:-

2.1 Design review to test proposed layout.
2.2 Arboricultural Implications Assessment (AIS).
2.3 Arboricultural Method Statement (AMS) & Tree Protection Plan (TPP).
2.4 Discharging planning conditions.
2.5 Implementation and supervision of tree work and protective measures.

So BS5837 requires an iterative progression interlocking with other specialists in the developer's team: plus interaction with the lpa staff (engineer, planner and tree officer).

- There is a development layout known to this surveyor. Therefore this report is stage 1 of the process: Survey and Constraints, AIS and AMS.

2.2 JBKS has provided the following plans:-

- **Topographic Survey by Midland Surveys dated June 2011, 5905-11/11, updated to 27/1/17**. Our constraints plans are based on this.

- **Proposed Block Plan GRE-CENT-171-00 Sept 2019,** is reproduced in appendices. This is the basis of our tree implications assessment.

3. Survey

3.1 The survey was conducted from ground level, involving visual observation; and measurements of locations, crown spread in four directions, height and dbh with tapes and hypsometer (Visual Tree Assessment: Mattheck and Breloer, 1994 and Lonsdale, 1999). Bases of suspect trees were sounded with a hammer and probed for defects with a chisel and steel rod.

3.2 The survey included any trees within influencing distance of the site.

3.3 Survey was carried out on 16th October 2017 by Jim Unwin (Professional CV in appendices).

4. Results of Survey

4.1 Physical

4.1.1 Survey Site details:

The survey site is an established town-centre Church with associated Church Centre, central carpark, and Greyfriars Day Nursery.

To the west is open space outside the Church boundary, set to mown grass or paving.

The plot is curved, about 130m east-west by 40m wide. Underlying Solid geology is Chalk, overlain by Drift of Taplow Sand & Gravel. Therefore, subsoil should be firm and well-drained.

4.1.2 Recent Maintenance:

The site is well maintained. The open public access to parts of the site and the town-centre location make tidiness difficult.

4.2 Landscape Setting of the Site

4.2.1 Photos:

Please refer to photos in Appendix III.

4.2.2 Land uses beyond the site:-

To the north is quiet residential Sackville Street. To the south and east are busy Friar Street and Greyfriars Road with shops etc opposite.

To the west is the relatively-recent roundabout and A329 dual carriageway.

4.2.3 Prominence of the site in the local landscape:-

The site is clearly seen from all sides.

4.3 Trees, hedges and large shrubs on or near site.

4.3.1 Trees on site:-

- The dominant features are three groups of three trees, mostly London planes, set on the western boundary, probably dating from the construction of the dual carriageway road.
- Two good hollies T14 & T15 stand south of the Church.
- T1-T6, T10 & T11, are small regularly-pollarded limes.
- Sweet chestnut T9 is an interesting tree, an example of faith: a big tree, but retained as a regular pollard tight to existing and new Nursery buildings.
- Norway maple T8 is exhibiting damage symptomatic of rootzone damage or compaction, possibly from 2011 building work? The whole rootzone could be aerated with Terravent air injection or radially trenched with an airspade and mulched.
- T12 is a small laburnum, on its ‘last legs’.

4.3.2 Trees nearby:-

- Not many: a few similar planes on the south-west side of the big roundabout.

4.3.3 Visual Amenity of Trees

- The site is extremely prominent, with few other trees in the same visual area. Therefore, all trees on site are important soft landscape features in an otherwise very arid urban landscape.
- TPO: Limes T1-T6, and sundry trees T8-T11 are all Protected.

4.4 Detailed Tree Descriptions

4.4.1 Trees **on, or potentially influencing** the site, are individually described in the table below, and shown on the plans in Appendix II.

- **Age class** is described as:-
  - Sap: Very young tree, or sapling, one-five years old.
  - Y: Young tree less than fifteen years old and <1/3 fully grown.
  - Sm: Semi-mature tree having attained 1/3 to 2/3 full stature and 1/3 to 1/2 estimated lifespan.
  - Em: Early mature: tree at 2/3 to virtually full size, and halfway through its safe life.
  - M: Mature: fully-grown tree with useful life expectancy.
  - Lm: Late-mature: fully grown, of declining vigour, but still healthy.
  - Om: Overmature tree: fully grown and starting to decline in health (but may still have many years of safe life).
  - Vet: Veteran: usually very old; of significant historic, habitat or cultural value.
- **Health / Structural condition:- Self-explanatory:- Good, Fair, Poor or Dead.**
- ***Remaining Safe Useful Life***

Prediction of safe life in its location, estimated as:-
<5 years, <10 years, 10-20 years, 20-40 years, >40 years.

- ***Retention*** *categories*, based on BS 5837 Section 4.5, are:-

Retain:

A =	*High quality or value >40yrs safe life*:	Light Green*
B =	*Moderate quality or value >20yrs safe life*:	Mid Blue*
C =	*Low quality or value >10yrs safe life or young trees <150mm stem diameter*:	Grey*

Remove:

U =	*<10yrs safe life or should be removed for sound arboricultural reasons*:	Dark Red*

(*Colour marking on relevant Tree plan)

Sub-category for retention:-

1 = Arboricultural Value
2 = Landscape Value
3 = Cultural and/or Habitat Conservation Value

- ***BS 5837:2012 Root Protection Area*:**

THE RPA CAN BE A VARIED SHAPE * ENCLOSING THE CORRECT ROOTABLE AREA: but SHOWN AS A CIRCLE Because we cannot predict exact rooting. Calculated as:-

Single-stem tree, radial distance **=** 12 x stem diameter at 1.5m ht.
Multi-stem trees = *either:* 12 x an equivalent single-stem tree with the same total cross-section area at 1.5m ht,
or: 10 x basal diameter.

4.5 Greyfriar's Church - BS5837 Inspection - BJUFC – August 2011, updated 16th October 2017

No. T=tree S= shrub H= hedge G= group	Species	Dbh (stem diam @ 1.5m ht) mm.	Total height. Ht to base of crown. Est Ht in 10 yrs. m.			Crown radii m.				Age class	Health	Structural Condition	SULE	Comment (All are in average to good health and condition, unless stated otherwise.)	Retention category A (best) to C. U = (remove) Sub-category 1, 2 or 3	BS 5837 Root Protection Area Radius. m.	Recommended WORK excluding development.
						N	E	S	W								
T1	Lime	430	9	2.5	8	4	5	4	4 ext	M	F	F/P	20-40	Row of pollarded limes. Last cut 2009/10.	B2	5.2	
T2	Lime	350	6	2.5	9	4	5	4	4 ext	M	F	F	20-40	Row of pollarded limes. Last cut 2009/10.	B2	4.2	
T3	Lime	310	6	2.5	9	4	5	4	4 ext	M	F	F	20-40	Row of pollarded limes. Last cut 2009/10.	B2	3.7	
T4	Lime	350	6	2.5	9	4	5	4	4 ext	M	F	F	20-40	Row of pollarded limes. Last cut 2009/10.	B2	4.2	

T5	**Lime**	**340**	**6**	**2.5**	**9**	**4**	**5**	**4**	**4 ext**	**M**	**F**	**F**	**20-40**	**Row of pollarded limes. Last cut 2009/10.**	**B2**	**4.1**	
T6	**Lime**	**440**	**6**	**2.5**	**9**	**4**	**5**	**4**	**4 ext**	**M**	**F**	**F**	**20-40**	**Row of pollarded limes. Last cut 2009/10.**	**B22**	**5.3**	
T7	**Gone**																
T8	**Norway maple**	**460**	**12**	**3**	**14**	**5**	**5**	**5**	**5**	**M**	**P**	**F**	**10-20**	**Reduced, last time 2009/10. Dieback. Basal trunk bark death. Probably rootzone damage or compaction following 2011 work.**	**C1**	**5.5**	
T9	**Sweet chestnut**	**680**	**10**	**0**	**13**	**4**	**1.5**	**2**	**1.5**	**M**	**F**	**P/F**	**10-20**	**Polled to high stump, last time 2014. Interesting shape. Constricted location.**	**B1**	**8.2**	
T10	**Lime**	**460**	**8**	**2**	**11**	**0.5**	**2**	**2**	**1**	**M**	**F**	**F**	**10-20**	**Polled 2016 at 7m.**	**B2**	**5.5**	
T11	**Lime**	**400**	**8**	**2**	**11**	**1**	**1**	**2**	**2.5**	**M**	**F**	**F**	**10-20**	**Polled 2016 at 7m.**	**B2**	**4.8**	

T12	**Laburnum**													**Fallen over. Gone.**			
T13	**Laburnum**	**230**	**6**	**2**	**6**	**2**	**4**	**2**	**0**	**LM**	**F**	**P**	**10**	**Extreme 45° lean to East.**	**C2**	**2.8**	
T14	**Holly**	**170, 320**	**9**	**2**	**9**	**3**	**3.5**	**4**	**3.25**	**M**	**F**	**F**	**>40**	**Main stem and subsidiary upright at 1m height.**	**A2**	**4.3**	
T15	**Holly**	**300**	**8.5**	**2**	**8.5**	**3.5**	**3.5**	**3.5**	**3.5**	**M**	**F**	**F**	**>40**	**Old basal pruning wound, minor decay.**	**B2**	**3.6**	
T16	**Birch GONE.**																
						NW	**NE**	**SE**	**SW**								
T17	**Lime GONE.**																
T18	**Silver birch**	**170**	**7**	**2**	**7**	**2**	**2**	**2**	**2**	**Em**	**P**	**F**	**10-20**	**Scruffy. 10% tip dieback, low vitality. Planting pit may be compacted?**	**C1**	**2.0**	

T19	**Silver birch**	**140**	**7**	**2.5**	**7**	**0.5**	**2**	**2.5**	**1**	**Em**	**P**	**F**	**10-20**	**Scruffy. Suppressed on North side by planes.**	**C1**	**1.7**	
T20	**Sweet bay**	**200 basal**	**5**	**1**	**7**	**1**	**1.5**	**1.5**	**1.25**	**Sm**	**F**	**F**	**20-40**	**Good evergreen bush. Susceptible to very cold frosts. Low over railings.**	**C1**	**2.0**	**Trim off railings.**
T21	**London plane**	**570**	**16**	**3**	**18**	**5.5**	**7**	**8**	**8**	**Sm / Em**	**F**	**F**	**>40**	**Largest of group of three at 5-6m spacing. Southwest crown over road.**	**A2**	**6.8**	
T22	**London plane**	**530**	**15**	**4**	**17**	**6**	**7**	**7**	**4**	**Sm / Em**	**F**	**F**	**>40**	**One of group of three at 5-6m spacing.**	**A2**	**6.4**	
T23	**London plane**	**360**	**12**	**3**	**14**	**6.5**	**4**	**0**	**5**	**Sm / Em**	**F**	**F**	**>40**	**Smallest of group of three at 5-6m spacing.**	**A2**	**4.3**	
T24	**London plane**	**650**	**18**	**5**	**20**	**8**	**7**	**8**	**8**	**Sm / Em**	**F**	**F**	**>40**	**Very good tree. In group of three.**	**A1**	**7.8**	
T25	**London plane**	**190, 250, 260, 430**	**8**	**4**	**10**	**1.5**	**2**	**2.5**	**1**	**Sm / Em**	**F**	**P**	**<10**	**In group of three. Pollarded 2015 at 6.5m.**	**C2**	**7.1**	
T26	**London plane**	**540**	**13**	**4**	**15**	**4**	**5**	**3**	**3**	**Sm / Em**	**F**	**F**	**>40**	**In group of three. Polled at 6.5m, and 8m in 2015. Canopy resting on Church Centre roof. Lifting asphalt path.**	**B2**	**6.5**	

T27	**Gone**																
T28	**London plane**	**790**	**22**	**4**	**24**	**6**	**7**	**9**	**9**	**Em**	**F**	**F**	**>40**	**Good tree. May have been high polled long ago. South side close to Church Centre roof. Heavy limbs over roadside footway.**	**A1**	**9.5**	
T29	**London plane**	**610**	**11**	**4**	**14**	**5**	**2**	**0**	**3**	**Em**	**F**	**P/ F**	**>40***	**Lean north. Polled 2015. * with pruning.**	**B2**	**7.3**	
T30	**Hornbeam**	**180 Est.**	**7**	**0.5**	**9**	**2.25**	**2.25**	**2.25**	**2.25**	**Y/ Sm**	**F**	**F**	**>40**	**Fastigiate variety.**	**B1**	**2.2**	

End of table.

5. Arboricultural Constraints, Impacts of proposed re-development on trees, and vice versa.

5.1 Proposed Development

5.1.1 The proposal is to rebuilt the Church Hall. **Proposed Block Plan GRE-CENT-171-00 Sept 2019** reproduced in appendices.

5.1.3 The carpark and Church extension have recent permission.

5.2 Tree Constraints and Impacts.

5.2.1 There are six potential arboricultural constraints to the development of the site:

- **physical contact of above-ground** parts of the tree,
- **below-ground** parts,
- **shading,**
- **over-bearing, and falling material,**
- **subsidence/heave, and root growth,**
- **amenity impact.**

5.2.2 Trees are coloured on the Tree Plans in Appendix II, to indicate their retention categories A,B,C,U: with the colours explained in the key of the plan (A = best to U = remove). This allows the site designer to plan around important trees, and ignore lesser trees.

5.3 Physical contact of above-ground parts of trees.

5.3.1 General:-

Tree Plan in Appendix II shows tree locations and crown spreads.

Crown dimensions: spread in four directions, base of crown and tree height, are given in Table 4.5.

5.3.2 Specific above-ground impacts:-

- Planes T25, T26 & T28 need trimming back from existing and proposed building to allow construction access. We assume 5-board scaffolding will be used: 1.5m wide. See 6.2.1 below.
- An exact specification for pruning is difficult because the trees will have grown by the time construction starts.

5.4 Below-ground root spread.

5.4.1 General:-

BS5837 defines a tree's Root Protection Area as a disc of soil 1m deep required to maintain long-term health a full-canopied tree of a given stem size, usually 12 x stem diameter. We show it as an idealised circle. Rooting areas are never symmetrical, but ideally there should be no ground disturbance within the RPA zone. At the discretion of an arboriculturalist, the RPA can be off-set if work is proposed on one side only. However, it is not appropriate to rely on the reduced RPA where potential disturbance extends halfway or more around the tree.

Typically the structural rootplate of a tree to resist windthrow is much smaller than the RPA. Therefore tree stability should not be affected by disturbance up to RPA boundary.

5.4.2 Specific Rootzone Impacts:-

- No impact from new building: on the existing footprint adjacent to trees.
- Construction access will require travelling across rootzones of London planes T22, T25, T26 & T28. Temporary ground protection needed. See 6.3.3 below.
- The building edge of the public path outside the new building will be affected by construction. This could impact T25, T26 & T28. See 6.9.2 below.
- There are no changes proposed to footpath near T22.

5.5 Shading.

5.5.1 General:-

The sun rises to 60^0 at mid-day in mid-Summer when trees are in leaf (ratio of 16m vertical height to 10m horizontal distance).
The sun only rises to 12^0 in mid-Winter. However, in winter deciduous trees are leafless, so shading is reduced.
Theoretical shadows of arcs equal to estimated tree height in ten-years' time are shown in Appendix II for potentially shade-casting better trees only, as recommended in BS5837. *This is the shadow pattern for a period from May to September inclusive, from 10.00hrs to 18.00hrs daily.*

5.5.2 Specific Shading Impacts:-

- Shading impacts will not change.

5.6 Over-bearing and Falling material.

5.6.1 General:-

All trees drop flower parts, leaves, twigs and fruits throughout the year. These can block gutters. Bird droppings and honeydew can spoil car paintwork. Big trees make adjacent dwellers nervous.

5.6.2 Specific Impacts:-

- Current impacts will not change.

5.7 Subsidence/heave & root growth.

5.7.1 The geology map suggests underlying chalk then sand & gravel. If so, heave and subsidence are not issues, because the clay content of subsoil would be low.

5.7.2 Planes near the Church Centre have potential to lift lightly-loaded structures such as paths, which should be maintained to avoid resulting trip hazards.

6. Arboricultural Method Statement in sequential order for proposed development at Greyfriars site.

6.1 Supervision

6.1.1 Trees cannot be protected unless the developer is committed to their protection. Arboricultural inspections as follows:-

- A site meeting **before work starts** between Council Tree Officer, site manager/architect, retained arboriculturalist / landscape architect is required to agree locations, and feasibility, of tree protection fencing and tree retention.
- Inspection and signing off **tree protection fencing** and **temporary ground protection**.

6.1.2 The local authority may require other follow-up inspections on this Town-centre site. All arb inspections to be followed within three days by an emailed supervision log with action points.

6.2 Tree Management

This should be done in two operations, before and after construction:-

6.2.1 Tree Work prior to ground work:-

- Initial tree **removal** required for the development, tree pruning **to allow access,** and work to provide **medium-term separation,** is listed in the work schedule below.

(Work recommended if there was no proposed development is also listed for comparison.)

No	Species	RPA radius m	Tree work: ignoring development.	Tree work: *FOR PROPOSED DEVELOPMENT* & landscaping.
T1	**Lime**	**5.2**		
T2	**Lime**	**4.2**		
T3	**Lime**	**3.7**		
T4	**Lime**	**4.2**		
T5	**Lime**	**4.1**		
T6	**Lime**	**5.3**		
T7	**Gone**			

T8	**Norway maple**	**5.5**		
T9	**Sweet chestnut**	**8.2**		
T10	**Lime**	**5.5**		
T11	**Lime**	**4.8**		
T12	**Laburnum**	**3.4**	**Gone.**	
T13	**Laburnum**	**2.8**		
T14	**Holly**	**4.3**		
T15	**Holly**	**3.6**		
T16	**Silver birch**	**5.2**	***Removed for Church extension.***	
T17	**Lime**	**5.9**	***Removed for Church extension.***	
T18	**Silver birch**	**2.0**		
T19	**Silver birch**	**1.7**		
T20	**Sweet bay**	**2.0**	**Trim off railings.**	
T21	**London plane**	**6.8**		
T22	**London plane**	**6.4**		
T23	**London plane**	**4.3**		
T24	**London plane**	**7.8**		
T25	**London plane**	**7.1**		***TRIM BACK 1.5M OFF BUILDING MINIMUM TO FIT 5-BOARD SCAFFOLDING.***
T26	**London plane**	**6.5**		***TRIM BACK 1.5M OFF BUILDING MINIMUM TO FIT 5-BOARD SCAFFOLDING.***
T27	**Gone**			
T28	**London plane**	**9.5**		***TRIM BACK 1.5M OFF BUILDING MINIMUM TO FIT 5-BOARD SCAFFOLDING.***
T29	**London plane**	**7.3**		
T30	**Hornbeam**	**2.2**		

End of table.

6.2.2 Treework informatives:-

6.2.2.1 Disturbance to wildlife.

It is essential to check for nesting birds, bat roosts, badgers and hibernating animals such as hedgehogs under trees, before pruning or removing trees, as negligent disturbance is an offence under the EC Habitat Directive 1992 and CROW Act 2000. The Habitat Regulations were amended in August 2007 to include as an offence ***any*** damage or destruction of a breeding site or resting place of European Protected species: mainly bats in a tree context..

In general, autumn tree work: **September, October and November** is least disruptive to bats and birds.

6.2.2.2 Permission

Trees may be protected by a TPO, and could lie within a Conservation Area.

Trees may be owned by third-parties.

Trees may be protected by planning conditions.

Therefore, a contractor must satisfy himself that all necessary permissions from the local planning authority or tree owners are in place before touching trees.

6.2.2.3 Quality of Tree Work

All off-ground tree work should be done by insured tree surgeon with certificates in aerial chainsaw use (NPTC/Lantra CS38 and CS39, and if possible CS40), and working to BS3998:2010.

Treework following construction (see 6.10 below…...)

6.3 Tree Protection

6.3.1 Requirement

The most important tree-protection measure is effective protective fencing, erected as close as possible to the Root Protection Area (RPA) boundary before any other work starts on site including demolition in the vicinity of trees.

It must be maintained until all work is completed, except final soft landscaping.

Here tree protection is proposed for retained trees, and for areas of proposed new planting where this is feasible: called landscape zones.

6.3.2 Vertical Tree Protection

6.3.2.1 Tree Protection fencing **locations** are shown on Tree Protection Plan in Appendix V.

6.3.2.2 Two **specification** for suitable protective fencing are given in Appendix VI. Heavyweight fencing would be best here. Alternatively use timber hoarding.

6.3.2.3 Within the fenced off Construction Exclusion Zone: **CEZ** there must be:-

- no access,
- no storage of materials, including soil,
- no ground disturbance.

6.2.2.4 Fencing to remain until all demolition, construction and hard landscaping work is completed, and removed only for final soft landscaping.

6.3.3 Temporary Ground Protection **TGP**.

6.3.3.1 IF work is required to be closer than the all-round protection zone, then the fenced off zone can be made smaller on that side, or entered temporarily.
Within construction access zones, **temporary horizontal ground protection plus temporary fencing is essential.** Shaded blue on TR&P plan.

6.3.3.3 Three obvious options for ground protection are:-

- Temporary ground protection plates such as aluminium "Eve Trackway" or plastic interlocking-plate ground protection, both on 100mm depth of woodchip or bark, shown in Appendix VII.
- A layer of woven geo-textile under 250mm depth Type-1 aggregate which is lifted after work (unsuitable here).
- Butted scaffold boards or 22mm plyboard laid on 100mm depth woodchip or bark mulch.

6.4 Construction Access.

6.4.1 Access for plant such as excavators, concrete deliveries, materials storage, etc is limited.
General points:-

- No plant or machinery to enter RPAs, unless protected by TGP, see 6.3.3 above.
- Prune back trees only sufficient to erect five-board scaffolding 1.5m wide.

6.4.2 The site is constrained, so site offices, storage containers and facilities buildings could be located within tree RPAs, provided they stood on stilt feet or bearers, and that any temporary services (drain etc) were routed over-ground.

6.5 Demolition.

6.5.1 Demolition of the Church Centre is close to trees.

6.5.2 Method statement as follows:-

- Stand excavator & dumper in carpark or within building footprint.
- Excavate using toothed bucket on excavator to drag existing footings and soil away from trees T21 to T29.

6.6 Foundations within RPAs.

- No special measure needed to protect trees.

6.7 Drainage.

6.7.1 Storm-water drainage:
Any soak-away system must be designed so that it does not add to, or decrease, ground water in trees' rooting zones. Existing systems should be used where possible to minimise change in trees' root zones.

6.7.2 Foul Drainage:

None new required near trees.

6.7.3 Sustainable Urban Drainage System:
If a SUDS scheme is implemented to reduce the load on Reading's main drainage, it must not significantly add to the soil water in trees' root zones.

6.8 Service Trenches.

6.8.1 Service trenches (electric lights, utilities, telecoms, drains etc) must be **designed** to run as far from trees as possible.

6.8.2 Trenches within RPA of ANY retained trees require this generalised work method:-

- Hand digging* or trench-less systems must be used.
  *Use an air-spade to reveal roots (Appendix VIII).
- Retain roots >15mm diameter within service trenches. Thread service pipe underneath.
- No roots >25mm diameter must be exposed or severed without express written permission of local authority tree officer or retained arboriculturalist.
- Any excavation within the RPA of a tree must be covered immediately after digging with damp hessian, topped by tarpaulin & plyboard, to prevent root desiccation.
- Hole must be backfilled within five days of opening.
- Wrap exposed roots >20mm with hessian, and surround by 50mm depth sand, as part of backfill medium.
- Tamp backfill material by hand thumper or whacker plate only.

6.8.3 Additionally, tree protection required during the planning and execution of service trenching is detailed in NJUG Volume 4 and BS5837.

6.9 Minimal-dig construction for new access drive, parking & paths

6.9.1 If roads, footpaths, cycle-ways, yards or parking are required near trees, they can be constructed in two ways:-

Conventional construction:- If outside a tree's RPA.
Minimal-dig construction:- If within a tree's RPA.

6.9.2 Paved paths adjacent to THE WESTERN AND NORTHERN WALLS OF NEW BUILDING MAY BE marginally AFFECTED BY NEW FOUNDATIONS.
WE ASSUME RENOVATED PATHS ARE SIMILAR TO EXISTING PAST T25, T26 & T28. No changes are proposed.

6.9.3 If they change, Appendix IX & X show 3-D cellular confinement systems for making thin, porous and shallow paths near trees.

6.10 Tree work following construction

6.10.1 Trees should be re-inspected. This inspection would reveal the need for remedial tree work for the following reasons:-
-to rectify damage occurring during construction (regrettable but possible),
-to allow additional clearance,
-or complete tree removal if trees were considered too close for safe

retention.
-see also comments below about a general tidy-up of the soft landscape.

6.10.2 All additional work subject to further local authority agreement if trees are protected by TPO or planning conditions, or stand within a Conservation Area.

6.11 New Landscaping

6.11.1 The site lies within an area of < 10% tree canopy, so is a high-priority area for tree planting.

6.11.2 New planting must allow for increased canopy spread and root spread of existing trees.

7.0 Conclusions

7.1 Proposed replacement of Greyfriars Church Hall requires NO tree removal. T25, T26 & T28 need trimming back for construction access.

7.2 Retained trees can be protected by careful construction methods.

7.3 Development can be landscaped by new planting incorporating trees as indicated on architect's plans.

If client or local authority have any further queries please do not hesitate to contact us.

Yours sincerely, Jim Unwin

B. J. Unwin Forestry Consultancy

References:

"The Body Language of Trees". Claus Mattheck and Helge Breloer. HMSO 1994.
"Principles of Tree Hazard Assessment and Management". David Lonsdale. HMSO 1999.
BS 3998: 2010 "*British Standard Recommendations for Treework*".
BS 5837: 2012 *"Trees in Relation to Demolition & Construction".*
NJUG Volume 4: 2007 "*Guidelines for the Planning, Installation and Maintenance of Utility Services in Proximity to Trees".* NJUG, 30 Millbank, London, SW1P 4RD.
"Trees and Development". Nelda Matheny and James R Clark. ISA. 1998.
BS 8206:1992 "*Lighting for buildings*" .
BRE guide 209 (2002) "*Site Layout planning for daylight and sunlight*" .
NHBC Chapter 4.2, *Building Near Trees*. National House Building Council, 2019.
"Tree Roots in the Built Environment". J Roberts, N Jackson & M Smith. R.A.T.8, TSO (The Stationary Office, London, 2006.

Appendix I

Site location:

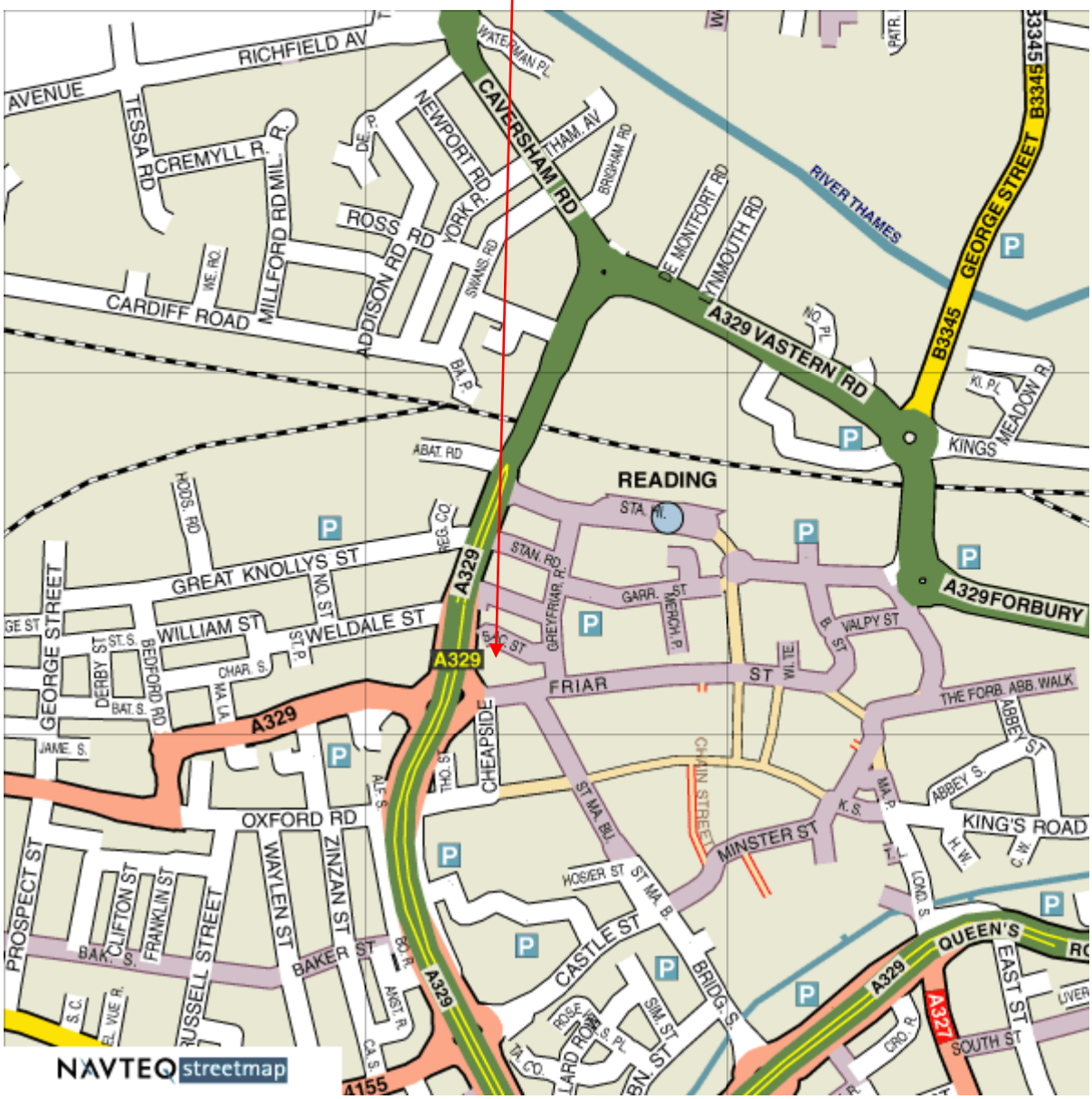

Google Earth July 2018

North

Appendix II

Constraints plans :-

- **Tree Plan**

***Retention categories*, based on BS 5837 Table 1:-**

A = *High quality & Value (>40yrs life)*: Green.

B = *Moderate quality & Value (>20yrs life)*: Blue.

****C = *Low quality & Value (>10yrs life)*: Grey.**

U = *Trees to be removed (<10yrs life)*: Red.

****PLEASE NOTE. FOR CLARITY, C-CATEGORY TREES MAY NOT BE COLOURED.**

- **Root Protection Areas Plan**

RPA = circles.
Outer ring is protection zone for work all around a tree,
Inner circle is protection zone for work one side only.
See Tree Table for dimensions.

and

- **Theoretical Shading Plan**

= quadrant of tree height in ten years' time from north west (mid-morning) to due east (evening). This is a shadow pattern for 1 x tree height from 10.00-18.00hrs from May to September.

Separate plans insert here:-

Appendix III

(Note orange air from Hurricane Ophelia.) 5 x Photos:-

P1: View south east to pollarded limes T1-T6.

P2: Bleeding base of Norway maple T8. Probably construction damage to rootzone.

P3: View north to lime T17 right (with permission for removal), birch T18 foreground, and planes beyond.

P4: View south east to planes T26, T25 and T24 on right.

P5: View east to planes T28 & T29, and hornbeam T30 left.

Appendix IV

Proposed Block Plan GRE-CENT-171-00 Sept 2019.

North

Tree retention indicative only.

Appendix V

Tree Retention & Protection Plan

Separate plan insert here:-

Appendix VI

Vertical Tree Protection Fencing, from BS5837.

Heras panels on rubber feet, pinned braces.

Vertical protective fence: location on plan:

Default in situ > 3 months:-

Apply signs at MAX 10m spacing:

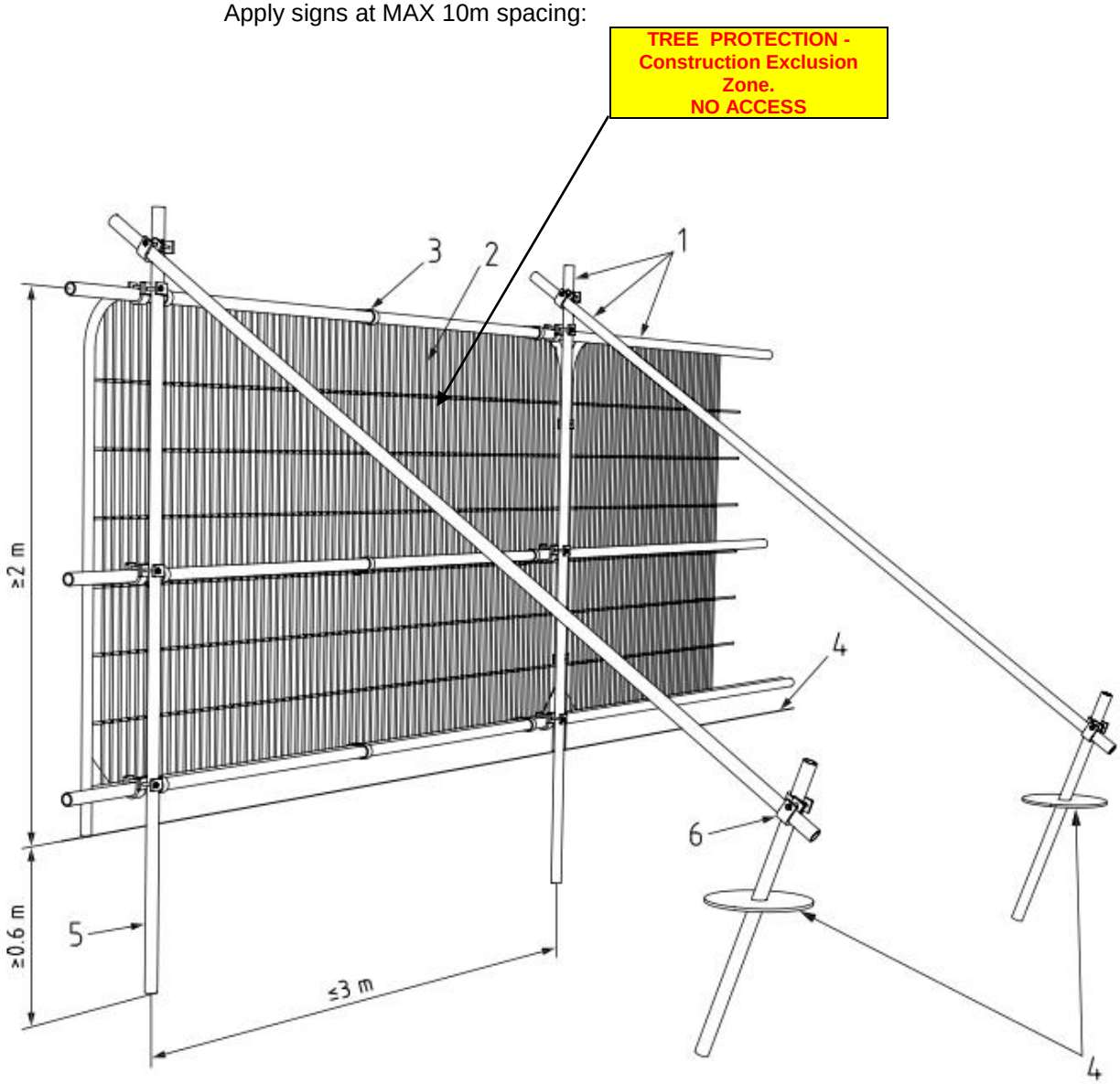

Key

1 Standard scaffold poles

2 Heavy gauge 2 m tall galvanized tube and welded mesh infill panels

3 Panels secured to uprights and cross-members with wire ties

4 Ground level

5 Uprights driven into the ground until secure (minimum depth 0.6 m)

6 Standard scaffold clamps

Lightweight: in situ for < 3 months-

Apply signs at maxm 20m spacing:

TREE PROTECTION - Construction Exclusion Zone. NO ACCESS

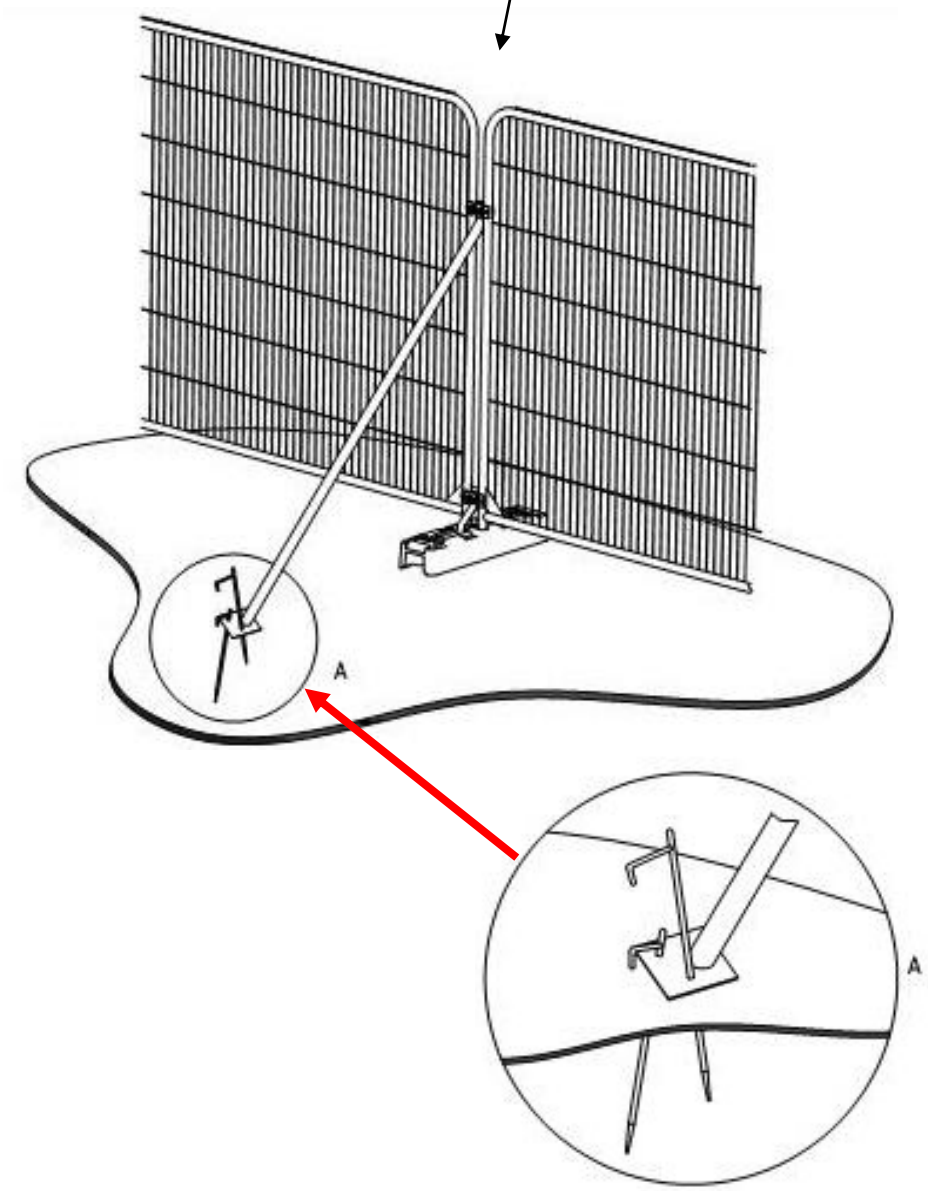

Appendix VII

Horizontal Ground Protection

Example of aluminium temporary ground protection.

EVE TRAKWAY

Roadways - Medium Duty Trakpanel

The Medium Duty Trakpanel, or 'Box' panel, is ideal for where both pedestrian and vehicle access is required. This versatile panel can be laid with either a smooth or corrugated surface uppermost. The smoother surface finish provides excellent support underfoot, whilst the construction of the panel maintains a high load bearing capacity. Due to the way these panels fit together, a smooth joint is created therefore reducing trip hazards.

The Benefits
Pedestrian friendly upper surface
Suitable for heavy vehicles
Ideal for where both pedestrians and vehicles require safe passage

Technical Specifications	
Dimensions	2.5 x 3m (when installed 2.44m x 3m due to overlap)
Weight	274.7 kg
Carrying Capacity	A more pedestrian friendly roadway, this system is capable of taking any road going loads.

The following Roadways are available. Please select an item to view more information:

Other Roadways products
- Heavy Duty Trakpanel
- LD20
- Roadway Ramps
- Multi-Directional Trakpanel

Example of plastic temporary ground protection.

Appendix VIII

Compressed-Air Soil Knife

HANDLE VIBRATION TEST

Product type – MBW Soil Pick SP125

Manufacturer of testing apparatus – Castle

Accelerometer was affixed to the rear of the handle on the Soil Pick and all three axes were tested.

Accelerometer position:
X axis = 0.0M/S2
Y axis = 0.0M/S2
Z axis = 0.0M/S2

Hand/arm vibration = 0.0M/S2

TREE CARE

MBW's Soil Pick provides a multi-functional air tool for a variety of applications in the tree care industry including:

Radial Trenching
Radial trenching is a process which involves aerating the soils around a tree root in a pattern resembling a wagon wheel. The Soil Pick provides a safe and damage free means of utilizing a high air pressure to loosen tightly compacted soils.

Aeration & Excavation

Root Locating for Utility Line Installation or Pruning

Investigating Root Structure and Damage

Transplanting or Bare Rooting

Reducing Soil Compaction

Appendix IX

Example of cellular-confinement tray system for reinforcing gravel parking & driveway.

green-tech
Landscape · Forestry · Construction

gt GRB
Ground Reinforcement Block

Exclusive to Green-tech Ltd

gt GRB is a recycled plastic grass paving system which offers a practical and cost effective driveable surface rather than using paving asphalt or concrete, whilst allowing water to naturally penetrate into the subsoil.

gt GRB can be either back filled with stone or filled with soil and seeded. Pre-sown turf can also be rolled into the block to create an instant grassed area.

The GRB has a simple interlocking system that ensures stability when travelled on by vehicles and pedestrians. gt GRB needs to be installed on a compacted stone sub-base (220mm -500mm depending on application) and a 30mm top layer of sand.

Applications:

Parking areas for Cars, Vans, Lorries & Coaches

Access for emergency vehicles

Caravan Parks and Camp Sites

Parks & Recreational Areas

Tree Root Protection

Pedestrian Pathways

Cycle, Cart & Buggy Paths

Embankment Erosion Control

Driveways & Bridleways

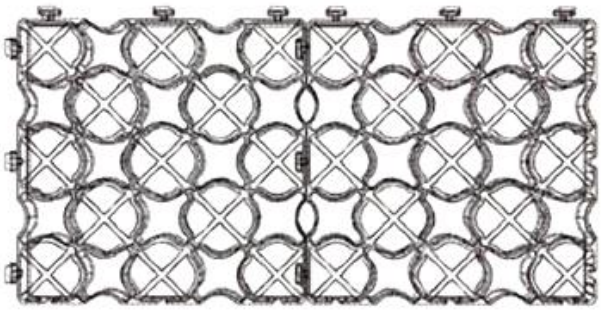

Technical information:

Product name:	gt GRB Ground Reinforcement Block
Material:	100% recycled
Colour:	Black
Size per unit:	330mm x 330mm
Cell height:	40mm
Pieces per sq.m:	9
Sq.m per pallet:	55
Cells per sq.m:	225
Load bearing:	150 tonne / m²

Sweethills Park, Nun Monkton, York, YO26 8ET
Tel: 01423 332100 Fax: 01423 332101
Email: sales@green-tech.co.uk
Web: www.green-tech.co.uk

green-tech

Appendix X

Geosynthetics Cellweb Three-dimensional cellular confinement system.

Access road for the National Lake District Parks Authority.

Site before construction pictured above.

CellWeb during installation.

Final surfacing.

Final surfacing

The CellWeb Tree Root Protection is totally confined within the clean stone sub base, therefore you can choose whichever surface materials are most appropriate for your installation. Some materials are more suitable than others and serious consideration should be given to the porosity of the surface for continued healthy growth of the tree. An ideal surfacing are DuoBlocks: a grass reinforcement and gravel retention system. Geosynthetics can supply these systems for a visually attractive surface that also has the advantage of being fully porous.

Loose or bonded gravels can be used as an alternative hard landscaping and CellWeb can also be used with block paviors whose porous joints will permit moisture and air transfer to the roots. Where planning allows, porous asphalt is yet another possible surfacing treatment.

Call our sales office on 0870 850 1018 for more information.

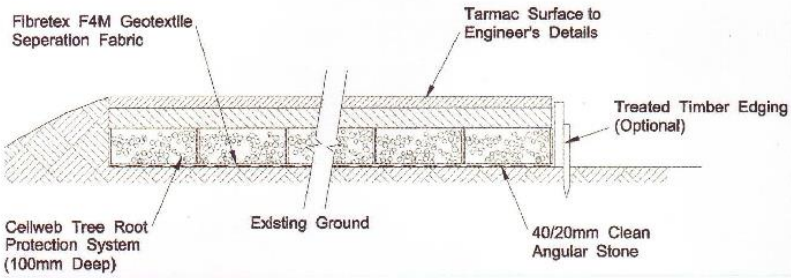

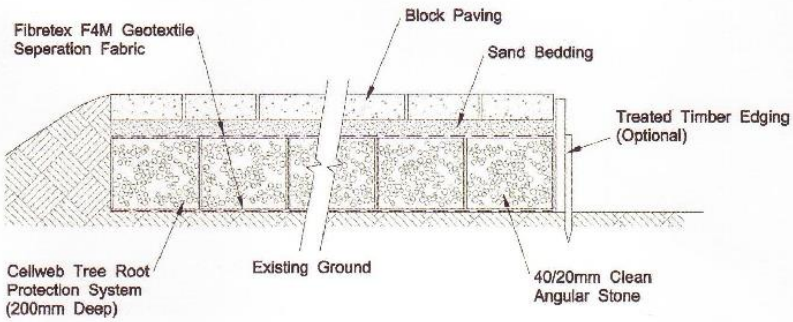

ıtor of geosynthetic materials in the UK

Design
ervice

Onsite support

See all products online at
geosyn.co.uk

GEOSYNTHETICS

Appendix XI

- B J UNWIN FORESTRY CONSULTANCY -

Head office: **Parsonage Farm, Longdon, Tewkesbury, Gloucestershire. GL20 6BD.**
Tel / Fax: 01684 833538. Home Tel: 01684 833795. Mob: 07860376527. **E-mail: Jim@bjunwin.co.uk**
Satellite Offices: - Haley Ridge, Highcliffe**, Nr. Wadebridge, Cornwall**, PL27 6TN.
-105 Charfield Court, 2 Shirland Road, **London**, W9 2JR.
Associate office: - 1 Market Place Mews**, Henley-on-Thames, Oxfordshire,** RG9 2AH.
Principal: **Jim Unwin BScFor, MICFor, FArborA, RCArborA, CEnv.**
Chartered Forester - ICF Registered Consultant - Fellow of the Arboricultural Association - Arboricultural Association Registered Consultant - Chartered Environmentalist.

From:	**Jim Unwin**	*To:*	**Prospective Client**
Date:	**Sept2019**	*No. of pages:*	**2**
Subject:	**Professional CV**		

Below are set out **B J Unwin Forestry Consultancy**'s competences and experience.

Insurance:-

£5m Public Liability & **£2m Professional Indemnity** **(renewed June)**.

Personnel:-

B J Unwin (born 1956) started his forestry career as a tree surgeon and landscape contractor in 1975. He studied forestry at Aberdeen University from 1977 to 1981, worked for Unilever as a Forestry Manager in the Solomon Islands from 1981 to 1983. Since then he has been based in Gloucestershire assisting clients to manage their woodland, trees and vegetation throughout Southern Britain, and occasionally in northern England, Scotland and Northern Ireland.

In the mid-1980s to mid-1990s for a period of about ten years he taught chainsaw, tree felling and tree surgery courses at Worcestershire Agricultural College on a part-time basis. He was assessed and passed as a LANTRA assessor in these skills, and held NPTC certificates of competence in chainsaw use on the ground and up trees.

He now works as a tree consultant / manager / contract manager to a range of clients listed below.

For tree decay testing we have a **PICUS II ULTRASOUND** tomograph with electronic callipers and **RESISTOGRAPH-R400** drill.

He works with two self-employed arboriculturalists of >20 years' combined experience:-

Jasper Fulford-Dobson Arboricultural Association Registered Consultant - Associate Member of the Institute of Chartered Foresters - Professional member of the International Society of Arboriculture - Technicians Certificate (ArborA) 2005, now regarded as NQF "level 4" - Professional Tree Inspection Certificate (LANTRA) 2013,

Owen Hutchison BSc(Hons) Agriculture & Estate Management, Level 4 Diploma Arboriculture, LANTRA Professional Tree Inspection & working with trees since 2007, &

Alex Collier who achieved in July 2018 Level 5 Arboriculture Foundation Degree with a Distinction. In June 2016 achieved Pershore College Level 3 Extended Diploma in Forestry and Arboriculture, completing the course with a Distinction grade (+SC30).

Plus a secretary/ plan technician; calling in extra help as required (eg ecologist or arboricultural assistant). On bigger projects he regularly works as a part of a multi-disciplinary team.

Current BJUFC qualifications are:-

BSc Forestry Hons 1st Class, Aberdeen 1981.

Chartered Forester No. 0330064, 1986.

Fellow of the Arboricultural Association, 1995.

Licensed Subsidence Risk Assessor, 1997-2001 (scheme closed in 2001).

Completed Training in September 2002 to Prepare Native Woodland Plans for CCW and FC in Wales.

Arboricultural Association Registered Consultant No. 42, 2004.

LANTRA certificate for Arboriculture and Bats, BJU in 2005.

Examined and approved to submit Welsh WGS as Management Planner and PAWS Assessor, 2006.

Joined Utilities Vendor DataBase, Supplier No: 88101 in Feb 2006 (left 2010).

Training and Certification in basic CAD operation 2006.

Chartered Environmentalist April 2008.

Woodfuel Production and Supply : LANTRA Certificate of Training Dec 2008.

Training in CAVAT amenity tree asset valuation October 2010.

Company Safety Policy:- We have been successfully assessed by Safety Management Advisory Services (SMAS) as meeting CDM Regs 2015 Core Criteria Stage 1, as a ***Worksafe Consultant No. 90180.*** expiry 27/09/2020.
CITB *Health, Safety & Environment Test for Managers & Professionals* passed 22/01/2015.
First-aid at work June 2013.

Current clients and typical work include:-

English Heritage	Tree safety inspection contract 2007-2013 for East Midlands, East Anglia, London and SE England. Tree safety inspection contract for West of England & Midlands 2013-2019.
Planning Inspectorate (**PINS**) & Dept for Communities and Local Government. 2000-2017.	**Arboricultural Inspecting Officer** in South-West England, South East England, West Midlands and East Midlands; advising the First Secretary of State on TPO appeals since 2000. Contract with DCLG expired April 2008 when transferred to PINS. Contract continued with PINS, as Non-Salaried **Arboricultural Inspector, determining TPO appeals and High Hedge appeals. All non-salaried inspectors released in 2017.**
Architects / Developers / Planning Appeals	Complete Tree Constraints, Impact Assessment & Tree Protection advice for planning, working with other professionals to input arboriculture into more complex development schemes. Recent assignments in Liverpool to Dorset, Kent, Norfolk & London. All using BS5837:2012. FULL CAD CAPABILITY.
Amey Mouchel Ltd	Overseeing Amey Tree Officer on motorway and trunkroad tree inspections throughout Midlands and Marches to 2012. Amey Mouchel are agents for Highways Agency.
CRH Tarmac Ltd, + Midland Quarry Products + Quarryplan (in Northern Ireland).	Since 1990 working with Estates staff, quarry managers and Landscape / ecological consultancies organising and managing contracts for tree and woodland planting both pre- and post- quarrying. Also preparing landscape restoration schemes for straightforward sites plus landscape management on sites throughout southern England, East Anglia and south and south-west Wales. (Commendations for Land Restoration and Environmental improvements from Spelthorne Borough Council 2003.) Also in England & Northern Ireland ongoing tree consultancy for Quarryplan.
Land Agents	Assisting Bruton Knowles clients' with woodland management and other tree issues since 1984. We also assist clients of Fisher German and Savills on a regular basis.
Tarmac Central now CRH Tarmac Ltd.	Since 1988 woodland management of Hopwas Hays Wood, Tamworth.
Rural estates in Herefordshire, Worcestershire and Gloucestershire, plus private woodland owners in southern England and Wales.	Since 1983 woodland management, tree management, hedgerow management. Many are Ancient woodlands and SSSI's requiring detailed ecological management plans produced in consultation with ecologists. About forty Farm Woodland Premium Schemes and about twenty Native Woodland Plans prepared to date in England and Wales. On-going EWGS grant applications. Input into Tir Gofal (and its successor) and Stewardship schemes. Better Woods for Wales (BWW) applications.
British Waterways	Ten-year Tree and Vegetation Management Plans along canals and around reservoirs in London, Hertfordshire, Berkshire, Birmingham, Staffordshire, Worcestershire, Gloucestershire, Shropshire, Llangollen Canal, etc: plus help in dispute with riparian owners. This work ceased around 2011.
Stroud District Council	Management of 49Ha woodland since 1989 on FC schemes plus grassland on DEFRA Stewardship Schemes, including HLS. Retired Nov07.
One–off clients	Since 1983 assisting tree owners, developers, lawyers etc throughout southern or midland Britain, including Wales, on a wide range of tree-related issues including planning, planning appeals, subsidence, health & safety, disputes, vegetation control, expert witness, valuation of woodlands, standing and felled timber, Christmas trees etc, and tree and landscape planting schemes. Recently High Hedge issues and BS5837 are hot topics.
Malvern Hills District Council. South Oxfordshire District Council	BJU Stand-in part-time Consultant Tree Officer Summer 2003. JF-D stand in Consultant Tree Officer summer 2009 to spring 2010.
Golf course & leisure facilities	Assistance with development of Carden Park golf course in Cheshire. Management advice for trees on other golf courses: Eg Ross Golf Club, Swindon Golf Club .
Farm management	Management of own 95Ha farmland since 1985.

Please do not hesitate to ask for further information. B J Unwin END.