FORTERRA

THE ORIGINAL
LONDON
BRICK

Heather

Heather

Manufactured to BS EN 771-1

Brick type
Category II, U, Clay Masonry Unit

Standard work size
215 x 102.5 x 65mm

Dimensional tolerances
Tolerance category: T2
Range category: R1

Compressive strength
$\geq$ 25N/mm^2

Water absorption
$\leq$ 23%

Durability
F1

Active soluble salts content
S2

Configuration
Frogged 15-20% Voids

Dry weight per brick
1.95kg

Pack Size
390

Factory
Whittlesey

BES 6001
Responsible Sourcing
www.greenbooklive.com

Disclaimer: The reproduction of colours and textures is only as accurate as the printing process will allow. Photographic samples should be used when shortlisting products but we advise that an actual sample should be seen before ordering.

FORTERRA

222 Peterborough Road
Whittlesey
Cambridgeshire
PE7 1PD

Sales 0330 123 1017
Technical 0330 123 1018
Fax 01733 206040
forterra.co.uk

Best practice brick handling

Make life easier with these simple tips which can save you time and money on your build.

Blending bricks

Bricks should be loaded-out from a minimum of 3 packs and it is advisable to draw from the packs in vertical rather than horizontal slices. Doing this helps avoid colour patchiness or banding in the brickwork.

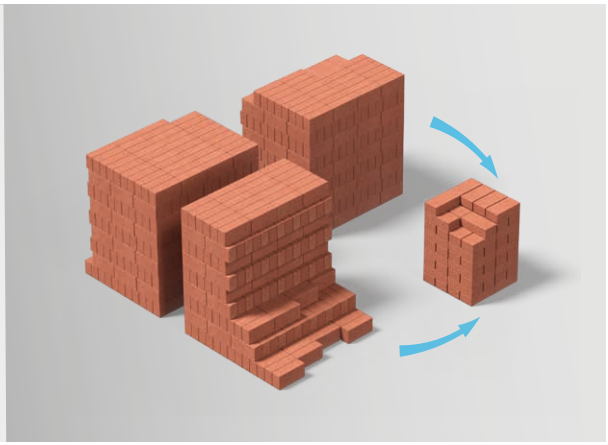

Brick storage

Bricks should be stored on a level, free-draining surface that is protected from the elements. Polythene wrapping provides protection from the weather; if this is removed for inspection it needs to be replaced or alternative protection needs to be provided.

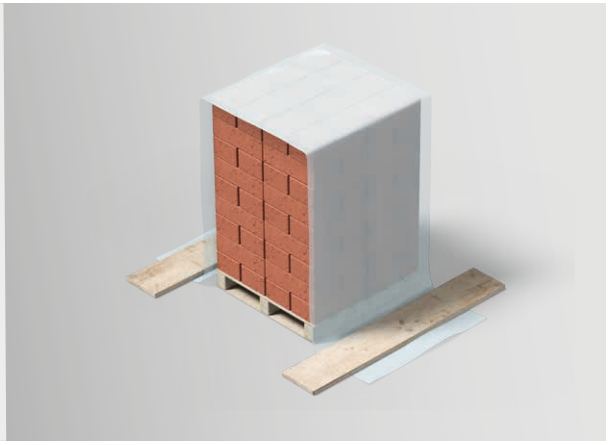

Protection of newly built brickwork

When work stops or is interrupted by inclement weather conditions, brickwork should be protected immediately with polythene sheeting that is held in place with a suitable fixing. If new brickwork is not protected, lime stains, efflorescence and patchy mortar colour can occur. It should also be noted that the laying of brickwork should be discontinued when the temperature falls below 3°C or when frost is imminent.

Mortar and bricklaying

Do not build at or near freezing conditions.

Lay London bricks frog upwards for maximum strength and density, and also for maximum rain penetration protection; when neither is required, as in most low-rise dwellings, bricks may be laid frog down.

General brickwork form DPC level to eaves level of domestic construction.

Internal and external from DPC to eaves: (Class M4 Designation iii) 1 : 6 Portland Cement : sand + plasticiser or 1 : 1 : 6 Portland Cement : lime : sand + plasticiser.

Note: For rendered brickwork use sulphate-resisting cement.

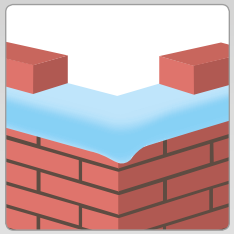

Protect recently constructed brickwork from inclement weather.

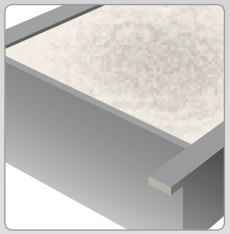

Batch materials in measured volumes.

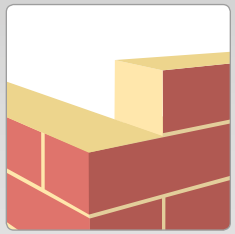

Fill all joints.

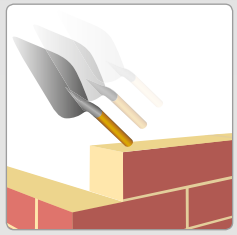

Avoid over tapping newly laid bricks.

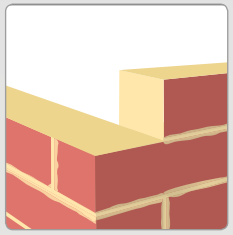

Avoid mortar stains.

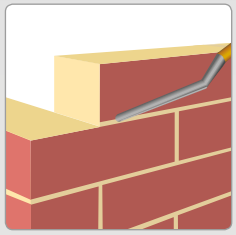

Finish mortar joints with an appropriate tool.

Plain Tile

Available in a range of thirteen natural shades, granular, through-coloured and acrylic coated, to match any roofing environment.

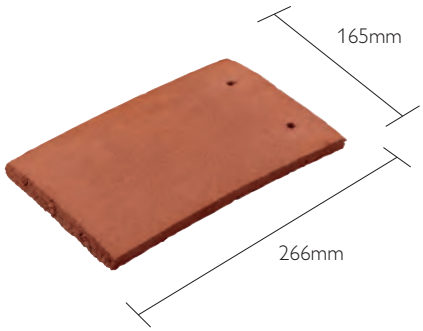

KEY ADVANTAGES

- Versatile concrete tile with wide scope for a variety of roofing effects
- Quick and easy to lay
- Smooth, coated and sanded finishes to blend with every regional roofing style

PRODUCT DATA

Size (overall)	268 x 165mm
Minimum Pitch	35°
Maximum Pitch (subject to fixing specification)	90°
Minimum Headlap	Below 90° 65mm / at 90° 35mm
Maximum Headlap	88mm
Minimum Gauge/Batten Spacing	88mm
Maximum Gauge/Batten Spacing	below 90° 100mm / at 90° 115mm
Hanging Length (approx.)	248mm
Cover (all figures are net and do not allow for wastage)	
Linear cover of 1 tile	165mm
Covering capacity	below 90° 60 tiles/m² / at 90° 52 tiles/m²
Weight	below 90° 75kg/m² / at 90° 65kg/m²
per pallet, including pallet (approx.)	1.01 tonnes
per 1000	1.25 tonnes
Battens Required (at max. gauge)	below 90° 10.0m/m²
Batten Size	
Rafter centres up to 600mm	38 x 25mm
Fixing Clips	Top Tile Clips
Nail Size for Tiles**	40 x 2.65mm (A/A)
Pallet Quantities	Tiles per pallet 768 / Tiles per pack 16 / Packs per pallet 48

*All weights nominal **(A/A) Aluminium Alloy

FITTINGS & ACCESSORIES

ORNAMENTAL TILE

Club Tiles

HIP PRODUCTS

Universal Bonnet Hip
Third Round Hip
Baby Ridge
Rapid Hip

VALLEY PRODUCTS

Universal Valley Tile
125 GRP Valley
Dry Valley

RIDGE PRODUCTS

Half Round Ridge
Half Round Monoridge

VENTILATION SYSTEMS

RedVent EavesVent
RedVent 25 Over-Fascia Vent
Top Edge Abutment Ventilation
DryVent Ridge
Rapid Vented Ridge
Uni-Vent Rapid Ridge/Hip
DryVent Monoridge
RedLine Ventilation Tile
Rapid Roof Vent
8.8k ThruVent Tile

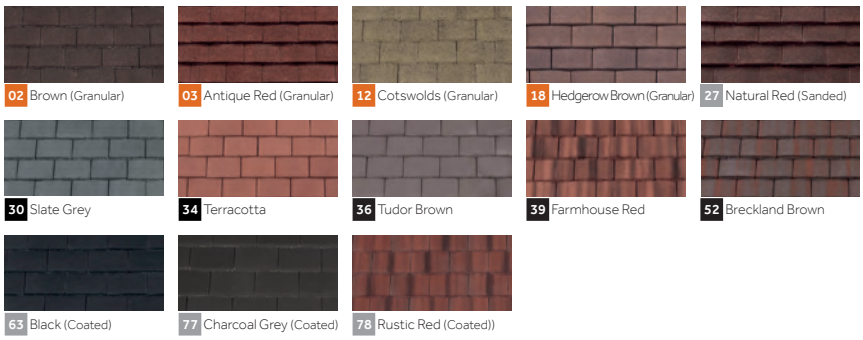

BMI Redland

Plain Tile Product Codes

TILES	
Standard Tile	6151
Eaves/Top Tile	6154
Tile-and-a-half	6159
UNDERLAYS	
Spirtech 400 2S underlay	9202
Divoroll Elite 25	9157
Divoroll Universal 25	9156
EAVES PRODUCTS	
RedVent EavesVent 350-450mm (6m)	9189
RedVent EavesVent 450-600mm (6m)	9190
Extension Trays 350-450mm (6m)	9498
Extension Trays 450-600mm (6m)	9499
Rapid EavesVent 2-in-1 Tray	9988
Rapid EavesVent Rafter Roll (6m)	9984
RedVent 25 Over-Fascia Vent (6m)	9593
Underlay Support Tray (1.5m)	9076
HIP PRODUCTS	
Continuous Hip (5m)	9502
Third Round Hip/Ridge Junction	9521
Uni-Vent Rapid Ridge/Hip (10m)	9313
Uni-Vent Rapid Hip Support Tray (1.2m)	9069
Third Round Hip (without nail holes)	8122
Third Round Hip (with nail holes)	7411
Hip Iron	9258
Third Round Block-End Hip	7784
Mortar Bedded Fixing Kit	9314
Mortar Bedded Fixing Kit	9314
VALLEY PRODUCTS	
125 GRP Valley (3m)	9595
Dry Valley (3m) (Low Profile)	9575
Universal Valley Trough Tile	7175
ABUTMENT PRODUCTS	
Wakaflex Rapid Flashing	
Top Edge Abutment Ventilation Pack(3m)	9548
Bonding Gutter (High Profile) (3m)	9578

RIDGE PRODUCTS	
DryVent Ridge (1.8m)	9058
Uni-Vent Rapid Ridge/Hip (10m)	9313
Continuous Ridge (5m)	9302
Ridge Vent Terminal	7253
Ridge Vent Terminal Adaptor	9175
Flexible Pipe (100 to 100mm)	9172
Gas Flue Ridge Terminal	7241
Gas Flue Ridge Terminals Extension Adaptor	9143
Gas Flue Blanking Plates	9099
Half Round Ridge	8101
DryVent Monoridge (2.7m)	9084
Half Round Monoridge	7203
Mortar Bedded Fixing Kit	9314
VENTILATION TILES	
RedLine Plain Tile Vent	9119
RedLine Vent Adaptor	9175
4.5k ThruVent Tile	7347
ThruVent Flexible Pipe (75 to 100mm)	9188
Rapid Roof Vent	9128
Rapid Roof Vent Adaptor	9175
Flexible Pipe (100 to 100mm)	9172
EXTERNAL VERTICAL ANGLES	
External Angle 90° LH	8134
External Angle 90° RH	8135
External Angle 135° LH	7142
External Angle 135° RH	7143
Eaves Clip Nail (812)	9338
FIXING	
Tile Nail (1596)	9331
Top Tile Clip	9282
Kro-Clip (50)	9142

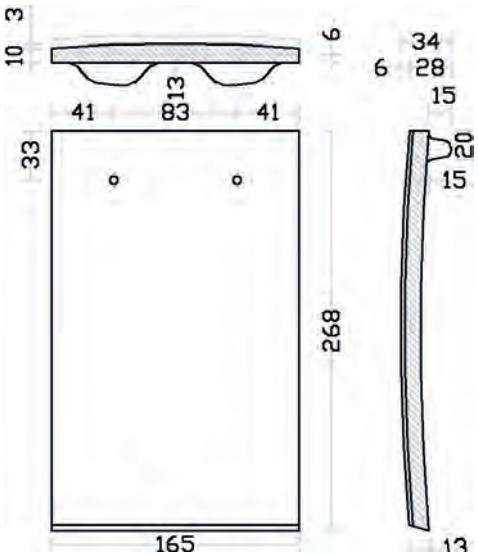

BMI UK & Ireland
BMI House,
2 Pitfield, Kiln Farm,
Milton Keynes, MK11 3LW
+44 (0) 3705 601000

www.bmigroup.com/uk

We are committed to continuously enhancing and improving our product range. We reserve the right to change our product specifications. We reserve the right to correct any typographical or clerical error or omission. For the latest information contact customer service.

REHAU®
Unlimited Polymer Solutions

PVC-U WINDOW AND DOOR SYSTEMS

THE TOTAL SOLUTION FOR SPECIFIERS

www.rehau.co.uk

Building Solutions
Automotive
Industry

PVC-U WINDOW AND DOOR SYSTEMS

THE TOTAL SOLUTION FOR SPECIFIERS

CONTENTS

1. Building The Future With Advanced Polymer Systems . . . 5
1.1 Three Principles of Energy Efficiency . . . 7
1.2 REHAU Environmentally Friendly and Energy Efficient Products . . . 8
1.3 REHAU Renewable Energy . . . 10
1.4 REHAU as a Premium Brand - Quality as a Unity Factor . . . 12
1.5 REHAU Academy - Theory and Practical Training Courses . . . 14

2. PVC-U Window Systems . . . 16
2.1 Casement Windows - REHAU S706 70mm . . . 16
2.2 Casement Windows - REHAU Tritec 60mm . . . 18
2.3 Tilt/turn Windows - REHAU S706 70mm . . . 20
2.4 Tilt/turn Windows - REHAU Tritec 60mm . . . 21
2.5 Fully Reversible Windows - REHAU S706 70mm . . . 22
2.6 Pivot Windows - REHAU Tritec 60mm . . . 24
2.7 Vertical Sliding Windows - REHAU Heritage . . . 26

3. PVC-U Door Systems . . . 28
3.1 Residential Doors - REHAU S706 70mm . . . 28
3.2 Residential Doors - REHAU Tritec 60mm . . . 30
3.3 French Doors - REHAU S706 70mm and REHAU Tritec 60mm . . . 32
3.4 Tilt/Slide Patio Doors - REHAU S706 70mm and REHAU Tritec 60mm . . . 34
3.5 In-Line Patio Doors - REHAU S717 . . . 36
3.6 Multi-Fold Doors - REHAU S706 70mm and REHAU Tritec 60mm . . . 38
3.7 REHAU S706 RAUFERNO - Fire Rated PVC-U Doors and Windows . . . 40

4. Conservatories . . . 42

5. REHAU Polytec 50S Curtain Walling . . . 44

6. Colours and Finishes . . . 46

7. REHAU Underfloor Heating . . . 48

8. Data Cable Management Systems . . . 49

9. REHAU Window and Door Summary . . . 50

The Choice for PVC-U Profiles

REHAU's extensive product range offers a great variety of window, door, conservatory and curtain walling systems, all of which are displayed in this brochure.

The details given about each product are designed to enable you to select the system most suitable for your requirements.

Once you have chosen the system one of our Commercial Sales Managers can provide all the necessary technical information in order to produce a full specification. Contact details including the areas covered by each of our Sales Offices can be found at the back of this brochure.

REHAU

BUILDING THE FUTURE WITH ADVANCED POLYMER SYSTEMS

1 Head office, Ross-on-Wye

2 Blaenau Factory

REHAU are a global manufacturer of energy efficient building solutions.

We bring innovative ideas from around the world to illustrate how commercial applications can comply with the latest building regulations and sustainability codes while, at the same time, minimising costs.

Best known in the UK for the manufacture of windows and curtain walling systems, REHAU offers renewable energy solutions such as ground source energy. We also provide underfloor heating and cooling systems, district heating, plumbing and data cable management systems. REHAU's comprehensive range is ideal for fast, efficient and cost-effective installation in all types of buildings.

Formed in 1948, REHAU prides itself on its technical expertise and is investing substantial resource on research and development for innovative solutions for the commercial sector. The company's outstanding reputation in this market has been built not only on the quality of its products but also on the value of the service and technical advice we have provided to construction projects for over 40 years.

Along with two UK manufacturing plants, REHAU has a Head Office in Ross-on-Wye and regional offices in Slough, Manchester, Glasgow and Dublin. We are also supported by a Specification Centre in the London Building Centre. Through the REHAU Academy, staff and Authorised Partners are trained to give full support to clients, specifiers and contractors.

Our team of Commercial Sales Managers provide a specialised service to architects, consultants, surveyors etc providing assistance with:

- Project feasibility studies
- Building regulation and British standard compliance
- CAD detailing
- Project specific specification development
- On-site project support

A truly global business, REHAU operates from 170 locations worldwide with more than 15,000 employees.

REHAU
QUALITY
ENERGY
EFFICIENCY

With innovative developments for window and curtain walling systems, heating and plumbing solutions as well as civil engineering applications, REHAU significantly influences the construction market. In this respect our main focus lies on Energy Efficiency, Water Management and Infrastructure Solutions.

The holistic REHAU approach to energy efficient building solutions is not just limited to renewable energy solutions. The perfect combination between thermal insulation and heating and cooling solutions minimises energy losses, reduces energy costs and significantly cuts CO_2 emissions.

Energy efficiency stands for our future.

We offer solutions which are sustainable and cost effective. REHAU Building Solutions and our project support and design advice follows the three principles of energy efficiency:

Reduce Energy Losses
Window and Curtain Walling Systems with optimum thermal insulation standards enables energy losses to be minimised through the building fabric for new build as well as refurbishment projects.

Distribute Energy Efficiently
Innovative surface heating and cooling solutions increase the comfort level of the occupants and reduces the energy consumption.

Generate Energy Efficiently
With the move away from gas, alternative heat sources need to be applied. The use of water and air based ground source solutions will provide a significant part of our energy generation mix.

The following pages will provide an overview of our wide range of REHAU Building Solutions. However, the main focus of this specification guide is on our window, door and curtain walling systems, the added value and design support we and our REHAU Authorised Partners can bring to your project.

1. REHAU

1.2 ENVIRONMENTALLY FRIENDLY AND ENERGY EFFICIENT PRODUCTS

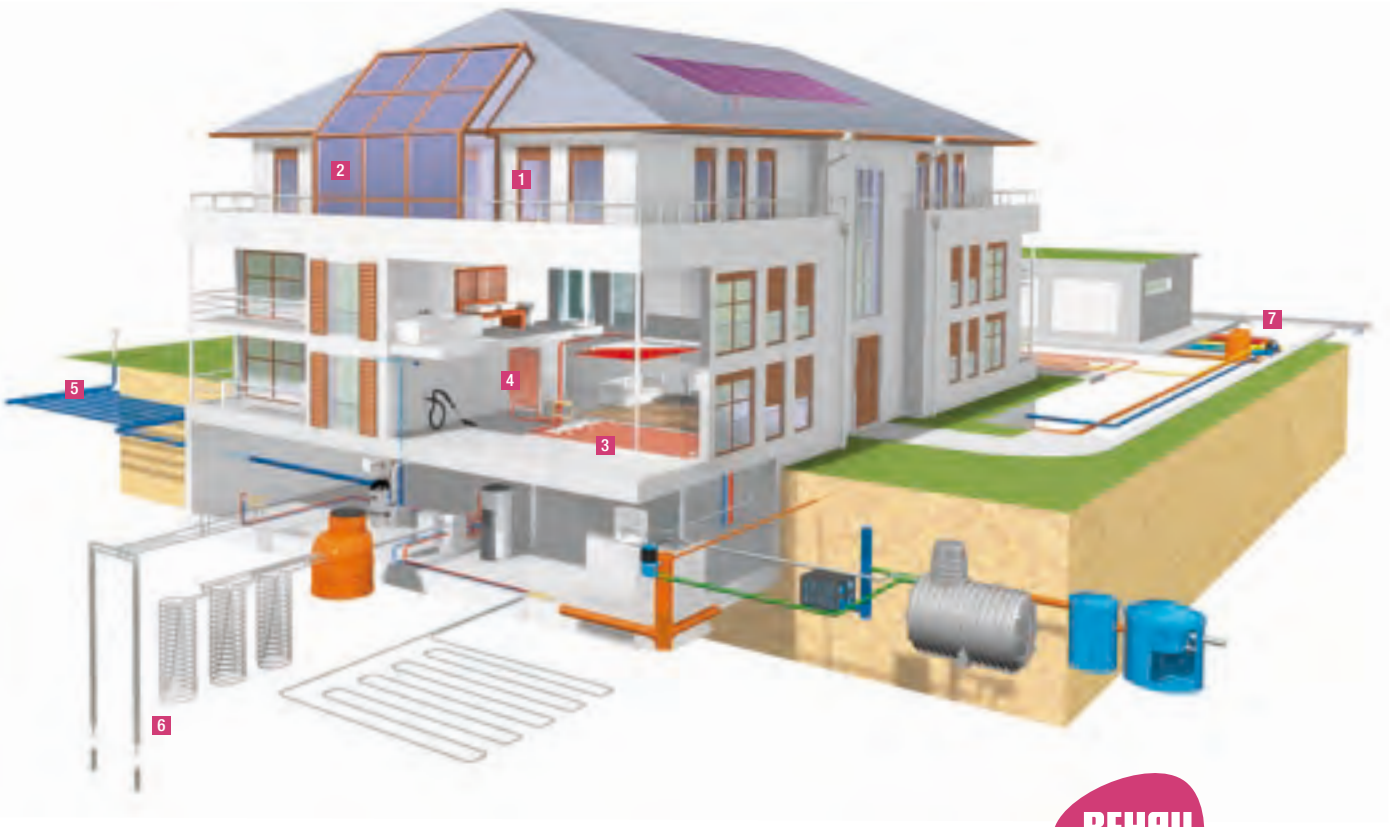

REHAU QUALITY ENERGY EFFICIENCY

1. REHAU Window and Door Systems
2. REHAU Curtain Walling Systems
3. REHAU Underfloor Heating
4. REHAU Heating and Plumbing
5. REHAU Ground Air Heat Exchanger
6. REHAU Ground Source Solutions
7. REHAU District Heating

5

6

7

REHAU Window and Door Systems

Energy Efficient Window and Door Systems up to Passive House Standard with an U_w-Value of 0.8 W/m²K reduce energy losses through the building fabric and enable increased glazed areas to maximise the use of natural daylight.

REHAU Curtain Walling Systems

The thermal characteristics of the composite curtain walling system REHAU Polytec 50S make it the ideal solution for large glazed areas on domestic as well as commercial projects (U_f-Value up to 0.88 W/m²K). The aesthetics of 50mm slim sight lines and powder coated aluminium cover caps together with the structural strength of box steel sections allow architects a vast design freedom.

REHAU Underfloor Heating

REHAU underfloor heating systems and intelligent controls provide cost effective comfort and safety in a variety of installation options. REHAU underfloor heating systems deliver the right amount of heat in the right place at the right time. It can also be used for cooling to future proof the building.

REHAU Heating and Plumbing

REHAU EVERLOC™ heating and plumbing system is the ideal solution for hot and cold water, central heating and underfloor heating solutions. The REHAU EVERLOC™ heating and plumbing system is an integrated range of reliable and high quality flexible polymer pipes and brass fittings. Our 10 year consequential loss guarantee increased the popularity.

REHAU Ground-Air Heat Exchanger

The ground-air heat exchanger AWADUKT Thermo exploits the energy stored in the ground. At a depth of 1.5m the ground is a constant 7 – 12ºC.
By drawing air through an underground network of pipes it provides a source of fresh air for the building, pre-heated in winter operation and pre-cooled in summer operation at minimal running costs.

REHAU Ground Source Solutions

Ground source heat pumps become more and more popular in the UK market, as they offer reduced energy and CO_2 emissions to heat and cool a building by extracting energy from the ground. REHAU offer a wide range of system solutions from vertical probes, energy piles, spiral probes and horizontal collectors. Therefore being able to offer the most suitable solution for every application. All based on high performance PE-Xa material with a 10 year consequential loss guarantee.

REHAU District Heating

There is a growing trend for remote energy centres, often using renewable heat sources such as ground-source, biomass or combined heat and power (CHP) plants. These offer an efficient heating solution but they are situated away from the main buildings.

In locating the energy centre separate from the main buildings, it is important to ensure that minimal heat is lost between the energy centre and the building.

RAUTHERMEX PE-Xa pre-insulated pipe offers excellent thermal insulation and temperature resistance up to 95ºC.

CD-Rom containing all information on our energy saving products is available from your regional Sales Office.

1. REHAU RENEWABLE ENERGY

1.3 ENVIRONMENTALLY FRIENDLY AND ENERGY EFFICIENT

REHAU understands that today's consumers are looking for properties that enhance their quality of life while reducing energy costs and CO_2 emissions. But it's not just about picking one or two high performance products. While each product yields sustainable benefits on its own, only successful integration can optimise performance and minimise operation costs.

Our goal is to design integrated systems that enhance quality of life while conserving resources throughout the product life cycle. REHAU provides reliable, long lasting product solutions that address sustainable design priorities such as energy efficiency, comfort, health and safety.

With the innovative systems offered by REHAU the zero carbon home is no longer merely a utopian fantasy. REHAU's Building Solutions and design advice follow the three principles of energy efficiency starting with reduction in energy losses, make optimal use of energy and efficiently generate energy.

Thanks to the outstanding insulation properties of REHAU window, door and curtain walling systems, the most important step of reducing energy losses can be achieved for both new build and refurbishment.

The Environment

REHAU has championed solutions for environmentally friendly window and door products for many years. We manufacture in accordance with BS EN ISO 14001 and recycle 80% of manufacturing off cuts into new profiles. In addition, REHAU is working with BRE to further minimise environmental impact of manufacturing process.

BRE Green Guide

The environmental benefits of REHAU window and door systems are supported by the BRE Green Guide with an A Rating for residential and an A+ Rating for commercial applications. Designers and consultants can therefore maximise the performance of their building project in regards to Code for Sustainable Homes or BREEAM Rating. Another important factor in this respect is the thermal performance with U_w-Values for the whole window element of up to 0.8 W/m²K. Minimising the energy losses through the building fabric making REHAU solutions suitable for up to Code Level 6 or Passive House Developments.

Window Energy Rating

REHAU has been continually involved in thermal efficiency of its windows and with window energy ratings to ensure that our window systems and therefore our customer base is well prepared for the future. REHAU Tritec 60mm and REHAU S706/Edge 70mm window systems are able to easily achieve A ratings with double glazed units. All this is possible without compromising on security or structural performance.

After extensive evaluation and development work REHAU has been able to achieve even higher thermal performance with REHAU's S706 using a patented thermal sleeve solution. This enables customers to achieve higher U values and better window energy ratings without the need for expensive glass or triple glazed units.

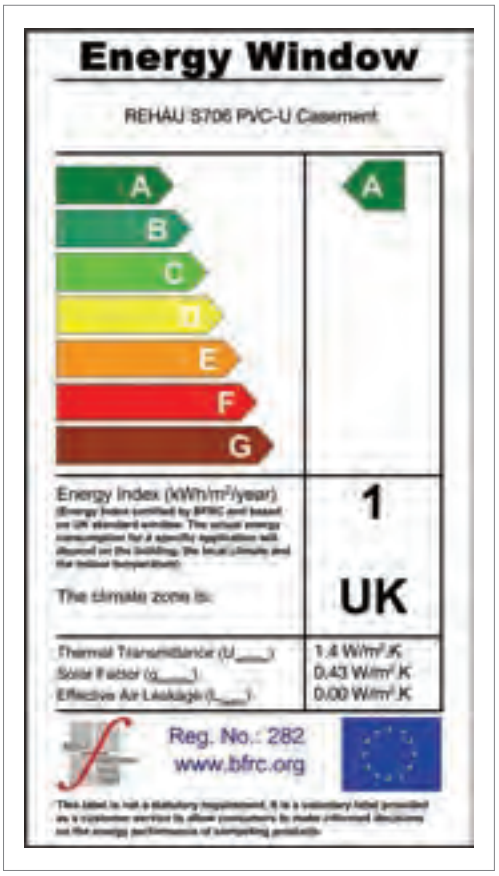

Energy Saving Trust

Currently C rated windows or better are included in the Energy Saving Trust scheme "Energy Saving Recommended"*. The "Energy Saving Recommended" certification mark was developed by the Energy Saving Trust to distinguish the most energy efficient products on the market. Only products that meet the strict requirements will be endorsed and given the certification mark. This logo is widely known to the public and used by REHAU Authorised Partners to promote REHAU Window Solutions.

*It is expected to increase to B rated windows by 2011

energy saving® recommended
www.energysavingtrust.org.uk

Certification mark

For more information please consult our Energy Efficiency Brochure ref. 710.712EN/122.

1. REHAU AS A PREMIUM BRAND

1.4 QUALITY AS A UNITY FACTOR

Red areas indicate high heat loss. PVC-U double glazed windows can help reduce this loss.

Design Life and Recyclability

With an expected design life of in excess of 35 years and the capability of recycling of all PVC parts at the end of the service life, REHAU windows and doors play a significant part in delivering a reliable and sustainable future.

Third party Approvals	REHAU Tritec	S706	REHAU Heritage
BSI REGISTERED FIRM	■	■	■
BBA BRITISH BOARD OF AGREMENT	■	■	■

For detailed information of the elements of each profile covered and nature of that cover please ask for our Test Reports.

Approvals

REHAU window and door systems, manufactured using approved profiles extruded within ISO 9001 Quality Management System in accordance with the requirements of BS EN 12608 (BSI Kitemark License KM 13358) and registered with BBA (Report No's 1930, 1108 and 1309), have been type tested and certified to performance standards:

- BS 7412 - Specification for window and door sets made from PVC-U
- BS EN 14351-1 - Windows and doors – product standard, performance characteristics
- BS 7950 - Specification for enhanced security performance of windows
- PAS 23 - General performance requirement for door assemblies
- PAS 24 - Enhanced security performance requirements for door assemblies.
- Secured By Design – UK wide police initiative to encourage the adoption of Crime Prevention measures covering a range of specific risk technology. This status is held by a number of our fabricators.

Building Regulations

REHAU systems comply with the relevant Building Regulations including Part L (England and Wales) and Part J (Scotland) - Conservation of Fuel and Power. The table below provides a guide to the regulations applicable to REHAU systems.

REHAU Commercial Sales Managers will be able to help you with any further details you require regarding REHAU systems and Building Regulations.

Cleaning and Maintenance

PVC-U can be cleaned with warm water, a gentle household detergent and a soft cloth.

Specific maintenance requirements, especially for finished products, fittings and hardware as issued by manufacturers and fabricators, should be observed.

Material Properties

REHAU systems are fabricated using profiles extruded from our own formulation, RAU-PVC 1406, which is impact modified and weather rated to the most onerous requirements within BS EN 12608 – Severe rating. This means that they are durable and will keep their looks for many years whatever the weather throws at them.

BS EN 12608
KM 13358

www.securedbydesign.com

Approvals and Building Regulations

Subject	England and Wales	Scotland	Northern Ireland
Fire Safety	Part B	Part E	Part E
Resistance to moisture	Part C	Part G	Part C
Resistance to the passage of sound	Part E	Part H	Part G
Ventilation	Part F	Part K	Part K
Conservation of Fuel and Power	Part L	Part J	Part F
Access for disabled people	Part M	Part Q	Part R
Glazing Safety	Part N	Part P	Part V

1. REHAU ACADEMY

1.5 THEORY AND PRACTICAL TRAINING COURSES

The REHAU Academy offers training courses for all our system solutions, ranging from one-day introduction courses to two-day installation and design courses. Our Academy is based at our Head Office in Ross-on-Wye. We also offer Academy Courses at our regional Sales Offices or if required on site at your premises.

The REHAU Academy forms an integral part of becoming an approved REHAU Authorised Partner, therefore ensuring that REHAU systems are designed and installed in the best possible way.

The services we provide also help architects, consultants and specifiers to become more successful in their market place. Our aim is to provide knowledge which will enable them to showcase their expertise to their clients and demonstrate their abilities to provide a total solution.

In addition to the scheduled training courses, regional events are organised by our regional Sales Offices to launch new products and inform about changes relevant to the UK market like Building Regulations, Standards or Funding.

REHAU also offer RIBA and CIBSE approved CPD Seminars which can be arranged at your premises on request.

Please contact one of our Commercial Managers, regional Sales Office or visit www.rehau.co.uk/company/academy/academy.shtml to get further information and book your place on the next course or event of interest to you.

2. PVC-U WINDOW SYSTEMS

2.1 CASEMENT WINDOWS – REHAU S706 70MM

Key Characteristics

- Ideal replacement for British timber casement windows due to 70mm depth
- Choice of chamfered profiles using REHAU S706 or fully sculptured using the REHAU Edge system
- Optional aesthetic features include run through sash horns, arched head inserts, clip-on georgian bars and low level glazing beads and gasket
- Available with or without integral gaskets
- French window style available
- Compatible with fully reversible, entrance doors, in-line tilt/slide patio and Multi-Fold doors
- Can be incorporated into conservatory designs
- Full range of supplementary profiles available to suit all installation requirements
- Able to achieve a BFRC 'A' Rating with standard and full reinforcement.

Appearance

- Available in White, Mahogany, Rosewood and Golden Oak on White, Mahogany, Rosewood and Golden Oak both sides as standard
- For other non-standard laminate options and the range of RAL colours available using our Acryl II colour system please refer to page 46.

Reinforcement

- Totally separate reinforcement chambers in profiles enables galvanised steels to be inserted for additional strength when required
- For more information please consult our Reinforcement Guidelines ref. 700.620E. and 706.695EN.

Insulation

- Complies with the requirements of the Building Regulations covering Conservation of Fuel and Power - Part L (England and Wales) and Part J (Scotland) when glazed using the correct type of sealed unit
- Can achieve an enhanced thermal performance through using the REHAU patented thermal sleeve*
- Sound insulation is dependent on glazing specification. For more information please consult one of our Commercial Sales Managers.

1 Patented Thermal Sleeve.

REHAU S706 Approvals
- BS EN 12608 (BS 7412) KM 13358
- BS 7950 KM 76189
- PAS 23/24 KM 66461
- BBA Report No's 1108 and 1309

Fittings and Hardware

The REHAU S706 and REHAU Edge systems can accommodate:

- A wide range of friction stays including egress hinges
- Both espagnolette and shootbolt locking mechanisms
- Manufacturers recommendations on maintenance should be followed.

Glazing

- 4mm to 42mm double glazing
- Internal or external glazing
- Dry glazing with glazing bead and gasket or a co-extruded glazing bead
- Low level glazing option available
- A security glazing gasket can be used for extra security.

		Outward opening side hung			Outward opening top hung		
Maximum Sash Sizes		Maximum			Maximum		
Sash	Finish	WxH cm	m²	kg	WxH cm	m²	kg
Sash Z	White	90x150	1.28	40	120x120	1.44	40
Sash T	White	90x150	1.28	40	120x120	1.44	40
Sash Z	Coloured/Foiled	90x150	1.28	40	120x120	1.44	40
Sash T	Coloured/Foiled	90x150	1.28	40	120x120	1.44	40

These sizes are for guidance only and are dependent on fittings and hardware used.
Please consult REHAU for more detailed information.

* See BFRC Guide Energy Efficient windows and doors for further information

70mm Casement window - S706
Internally beaded chamfered sash

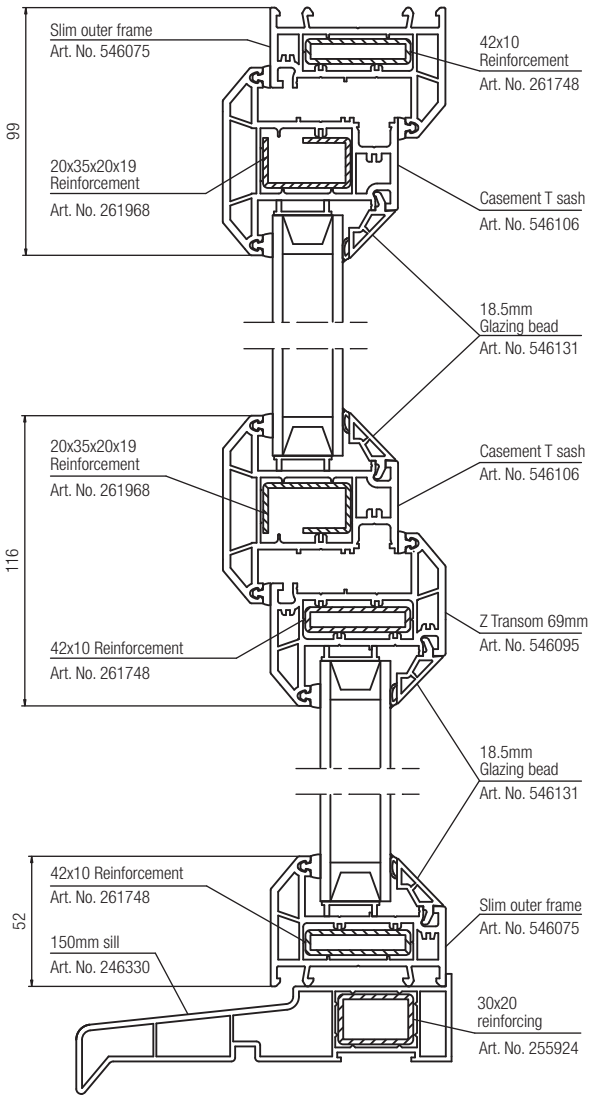

70mm Casement window - REHAU Edge
Internally beaded sculptured sash

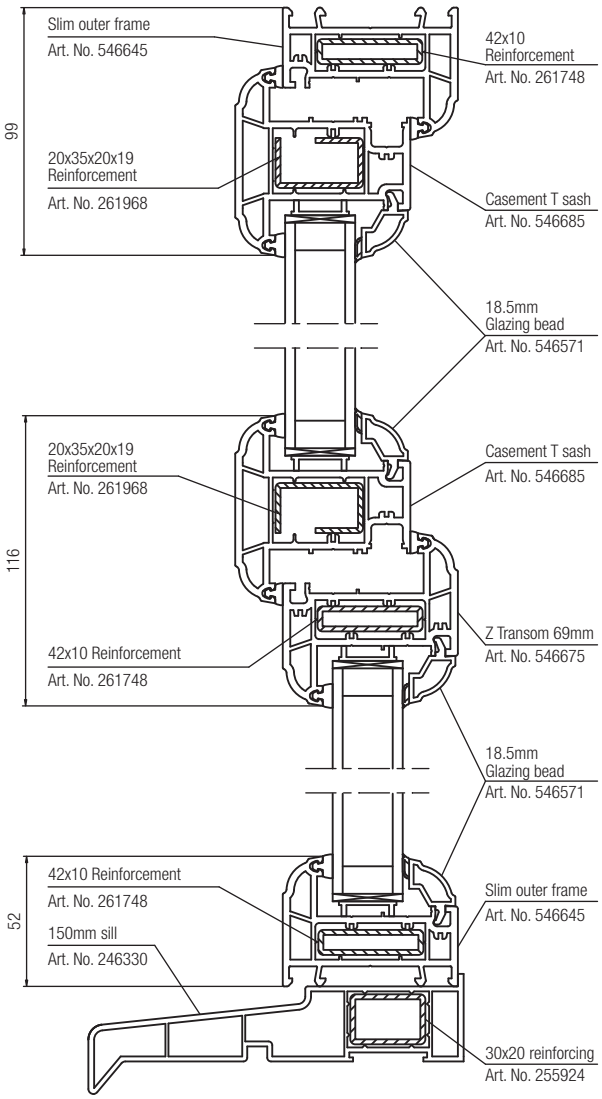

DETAILED DRAWINGS ARE AVAILABLE ON REQUEST

REHAU S706 70MM

CASEMENT WINDOWS

2. PVC-U WINDOW SYSTEMS

2.2 CASEMENT WINDOWS – REHAU TRITEC 60MM

Key Characteristics

- A versatile system offering the benefits of slim sight-lines
- Choice of chamfered or sculptured sashes
- French window style available
- Optional aesthetic features include run through sash horns, arched head inserts, and clip-on georgian bars
- Available with or without integral gaskets
- Compatible with tilt/turn and pivot windows, entrance doors, in-line tilt/slide patio and Multi-Fold doors
- Can be incorporated into conservatory designs
- Full range of supplementary profiles available to suit all installation requirements
- Able to achieve a BFRC 'A' Rating with standard and full reinforcement.

Appearance

- Available in White, Mahogany, Rosewood and Golden Oak on White, Mahogany, Rosewood and Golden Oak both sides as standard
- For other non-standard laminate options and the range of RAL colours available using our Acryl II colour system please refer to page 46.

Reinforcement

- Totally separate reinforcement chambers in profiles enables galvanised steels to be inserted for additional strength when required
- For more information please consult our Reinforcement Guidelines ref. 700.620E. and 703.695EN.

Insulation

- Complies with the requirements of the Building Regulations covering Conservation of Fuel and Power - Part L (England and Wales) and Part J (Scotland) when glazed using the correct type of sealed unit
- Sound insulation is dependent on glazing specification. For more information please consult one of our Commercial Sales Managers.

1 Golden Oak casement window with arched head insert

REHAU Tritec Approvals
- BS EN 12608 (BS 7412) KM 13358
- BS 7950 KM 76189
- PAS 23/24 KM 66461
- BBA Report No. 1930

Fittings and Hardware

The REHAU Tritec system can accommodate:

- A wide range of friction stays up to a 17mm stack height
- Both espagnolette and shootbolt locking mechanisms
- Manufacturers recommendations on maintenance should be followed.

Glazing

- 4mm to 32mm glazing
- Internal or external glazing
- Silver grey gasket with white profiles and like coloured gasket with mahogany, rosewood and golden oak are less obtrusive
- Dry glazing with glazing bead and gasket or a co-extruded glazing bead
- Choice of sloped or sculptured beads
- Low level glazing option available
- A security glazing gasket can be used if required.

		Outward opening side hung 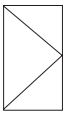			Outward opening top hung 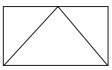		
Maximum Sash Sizes		**Maximum**			**Maximum**		
Sash	Finish	WxH cm	m^2	kg	WxH cm	m^2	kg
Sash Z	White	90x160	1.2	40	120x120	1.0	40
Sash T	White	90x160	1.2	40	120x120	1.0	40
Sash Z	Coloured/Foiled	90x160	1.0	40	120x120	1.0	40
Sash T	Coloured/Foiled	90x160	1.0	40	120x120	1.0	40

These sizes are for guidance only and are dependent on fittings and hardware used.
Please consult REHAU for more detailed information.

60mm Casement window
Internally beaded sculptured sash

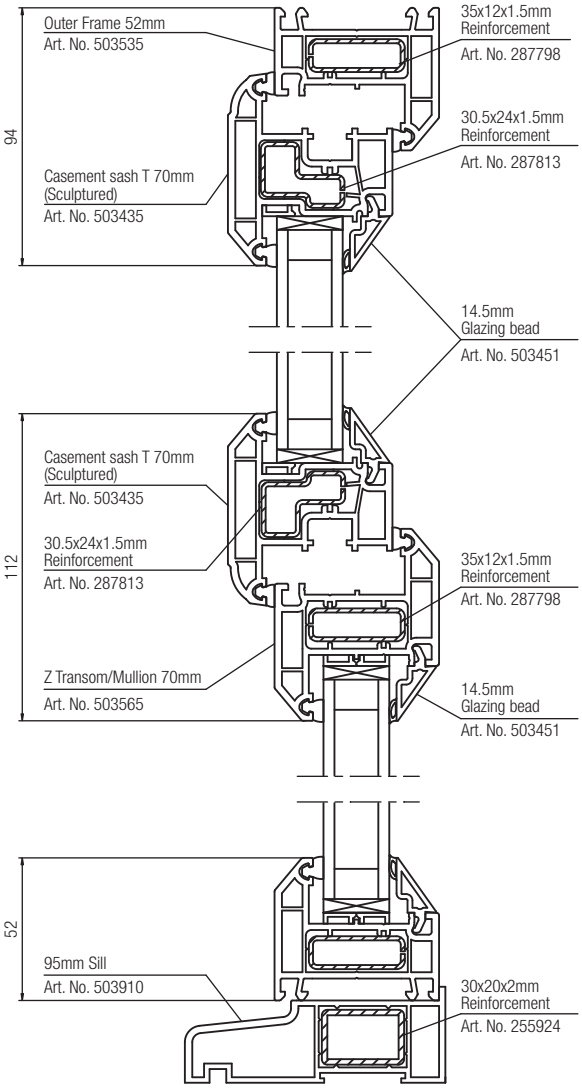

60mm Casement window
Internally beaded chamfered sash

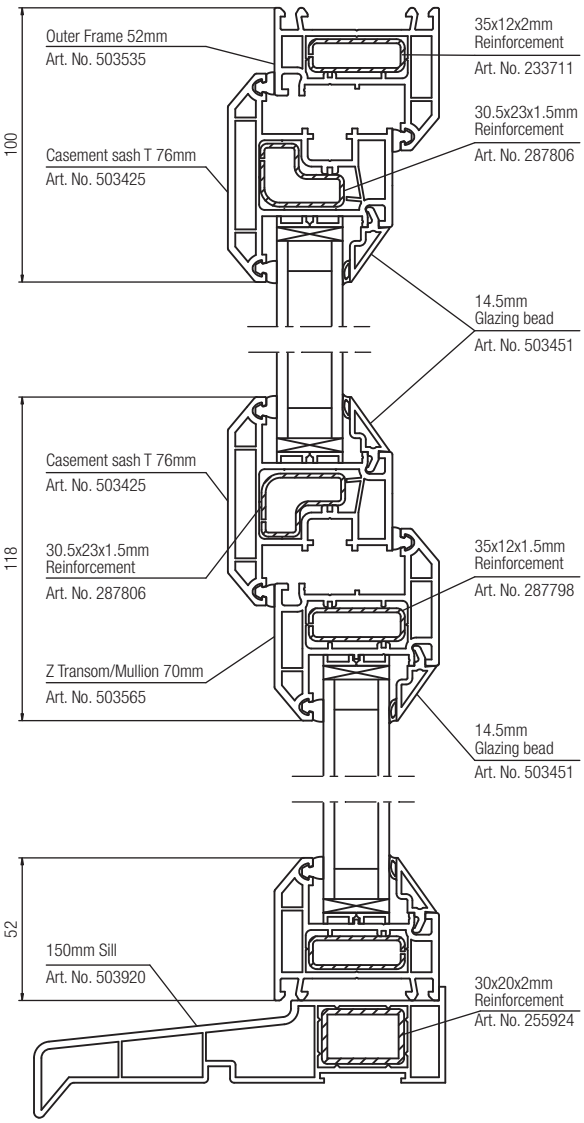

DETAILED DRAWINGS ARE AVAILABLE ON REQUEST

REHAU TRITEC 60MM

CASEMENT WINDOWS

2. PVC-U WINDOW SYSTEMS

2.3 TILT/TURN WINDOWS – REHAU S706 70MM

Key Characteristics

- Choice of chamfered profiles using REHAU S706 or fully sculptured using the REHAU Edge system
- Both systems offer extremely slim sight-lines and enhanced aesthetic appeal
- Inward opening for effective fire escape, easy cleaning and where restricted space outside makes outward opening hazardous
- Full range of supplementary profiles available to suit all installation requirements.

Appearance

- Available in White, Mahogany, Rosewood and Golden Oak on White, Mahogany, Rosewood and Golden Oak both sides as standard
- For other non-standard laminate options and the range of RAL colours available using our Acryl II colour system please refer to page 46.

Reinforcement

- Galvanised steel reinforcement for sashes over 1100mm wide by 1100mm high
- For more information please consult our Reinforcement Guidelines ref. 700.620E. and 706.695EN.

Insulation

- Complies with the requirements of the Building Regulations covering Conservation of Fuel and Power - Part L (England and Wales) and Part J (Scotland when glazed using the correct type of sealed unit
- Sound insulation is dependent on glazing specification. For more information please consult one of our Commercial Sales Managers.

Fittings and Hardware

- 16mm eurogroove ensures maximum choice of standard fittings, some of which include the tilt before turn option as well as restrictors
- Manufacturers recommendations on maintenance should be followed.

Glazing

- 4mm to 42mm glazing
- Internally glazed
- Glazing depth can be extended to 42mm for triple glazing using a special bead
- Dry glazing with glazing bead and gasket or a co-extruded glazing bead.

Tilt/Turn

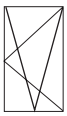

Maximum Sash Sizes		Maximum		
Sash	Finish	WxH cm	m^2	kg
Sash Z	White	120x150	1.8	60
Sash Z	Coloured/Foiled	120x150	1.8	60

These sizes are for guidance only and are dependent on fittings and hardware used. Please consult REHAU for more detailed information.

Key Characteristics

- Chamfered sash and outer frame provide extremely slim sight-lines and enhanced aesthetic appeal
- Inward opening for effective fire escape, easy cleaning and where restricted space outside makes outward opening hazardous
- Full range of supplementary profiles available to suit all installation requirements.

Appearance

- Available in White, Mahogany, Rosewood and Golden Oak On White, Mahogany, Rosewood and Golden Oak both sides as standard
- For other non-standard laminate options and the range of RAL colours available using our Acryl II colour system please refer to page 46.

Reinforcement

- Galvanised steel reinforcement for sashes over 800mm wide by 800mm wide
- For more information please consult our reinforcement guidelines ref. 700.620E. and 703.695EN.

Insulation

- Complies with the requirements of the Building Regulations covering Conservation of Fuel and Power - Part L (England and Wales) and Part J (Scotland) when glazed using the correct type of sealed unit
- Sound insulation is dependent on glazing specification. For more information please consult one of our Commercial Sales Managers.

Fittings and Hardware

- 16mm eurogroove ensures maximum choice of standard fittings, some of which include the tilt before turn option as well as restrictors
- Manufacturers recommendations on maintenance should be followed.

Glazing

- 4mm to 32mm glazing
- Internally glazed
- Glazing depth can be extended to 42mm for triple glazing using a special bead
- Silver grey gasket with White profiles and like coloured gasket with Mahogany, Rosewood and Golden Oak are less obtrusive
- Dry glazing with glazing bead and gasket or a co-extruded glazing bead
- Choice of sloped or sculptured beads
- Low level glazing option available
- A security glazing gasket can be used if required.

REHAU S706 Approvals
- BS EN 12608 (BS 7412) KM 13358
- BS 7950 KM 76189
- PAS 23/24 KM 66461
- BBA Report No's 1108 and 1309

REHAU Tritec Approvals
- BS EN 12608 (BS 7412) KM 13358
- BS 7950 KM 76189
- PAS 23/24 KM 66461
- BBA Report No. 1930

		Tilt/Turn		
Maximum Sash Sizes		Maximum		
Sash	Finish	WxH cm	m^2	kg
Large Sash Z	White	150x170	2.1	100
Slim Sash Z	White	100x150	1.3	40
Large Sash Z	Coloured/Foiled	150x170	2.1	100
Slim Sash Z	Coloured/Foiled	100x150	1.3	40

These sizes are for guidance only and are dependent on fittings and hardware used. Please consult REHAU for more detailed information.

PVC-U WINDOW SYSTEMS 2.

TILT/TURN WINDOWS – REHAU S706 70MM 2.3

TILT/TURN WINDOWS – REHAU TRITEC 60MM 2.4

70mm Tilt & Turn 70mm Sash
Internally beaded chamfered sash

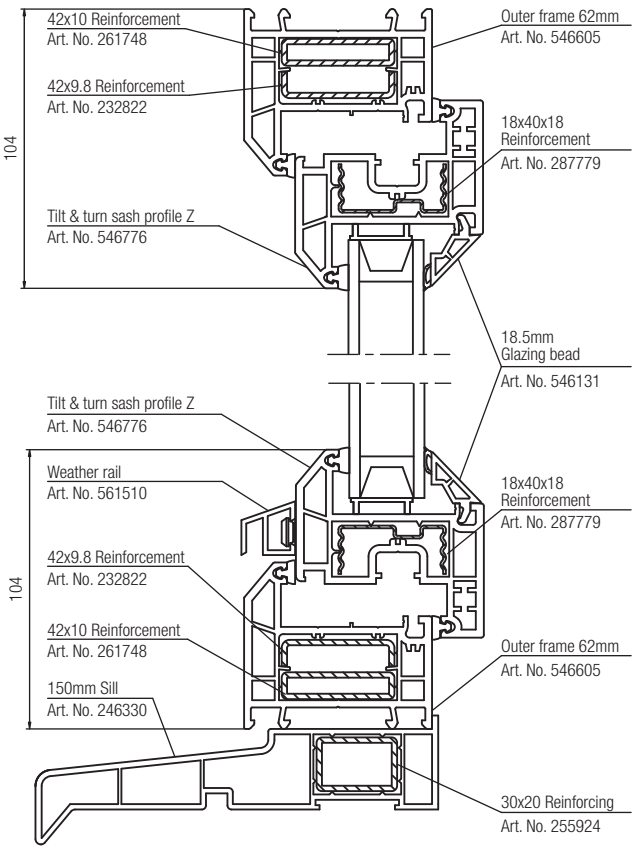

60mm Tilt & Turn 72mm Sash
Internally beaded chamfered sash

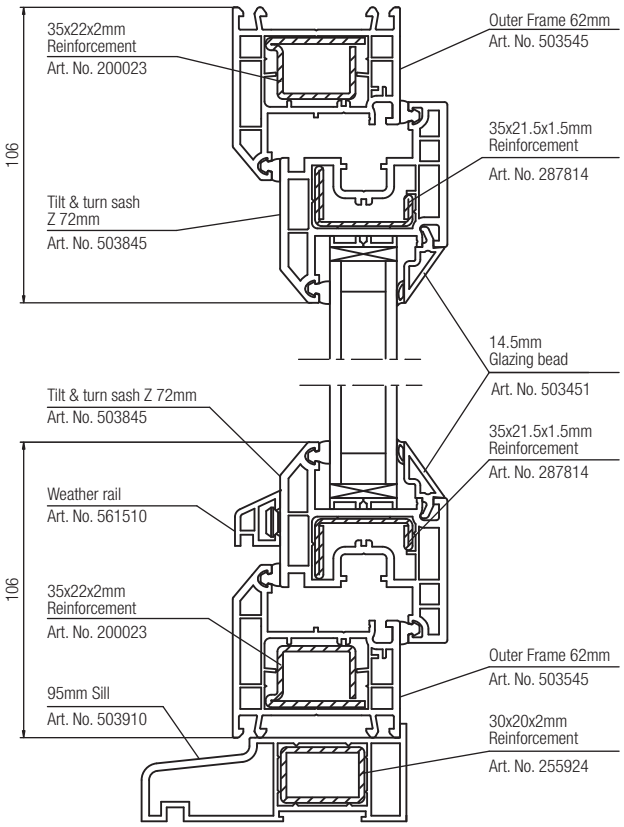

DETAILED DRAWINGS ARE AVAILABLE ON REQUEST

REHAU S706 70MM / REHAU TRITEC 60MM

TILT/TURN WINDOWS

2. PVC-U WINDOW SYSTEMS

2.5 FULLY REVERSIBLE WINDOWS – REHAU S706 70MM

Key Characteristics

- Allows easy manufacture of fully reversible windows in combination with fixed lights, tilt and turn and casement windows from the REHAU S706 system
- Designed to meet all common specifications
- Possible combinations include: top turn or side turn with fixed lights, tilt and turn and casement windows
- 70mm profile depth matches British architecture and is the ideal replacement for timber sections
- All external sections have a 50° chamfer for optimal aesthetic appearance and to match putty-line
- Integrates with the range of REHAU S706 supplementary profiles and sills.

Appearance

- Available in White, Mahogany, Golden Oak and Rosewood both sides as standard
- For other non-standard laminate options and the range of RAL colours available using our - Acryl II colour system please refer to page 46.

Reinforcement

- Totally separate reinforcement chambers in profiles enables galvanised steels to be inserted for additional strength when required
- For more information please consult our Reinforcement Guidelines ref. 700.620E. and 706.695EN.

1 Side Swing Option

REHAU S706 Approvals
- BS EN 12608 (BS 7412) KM 13358
- BS 7950 KM 76189
- PAS 23/24 KM 66461
- BBA Report No's 1108 and 1309

Fittings and Hardware

- Accepts a wide range of popular hinge types
- Cockspur handles, espagnolette or shootbolt locking options
- All fittings can be fastened into metal reinforcement for additional strength/security
- Manufacturers recommendations on maintenance should be followed.

Glazing

- 4mm to 42mm glazing
- Internally beaded for security and ease of glazing
- Sloped, semi-sloped or featured co-extruded glazing beads for choice of aesthetics
- Co-extruded solid and cellular EPDM casement seal for optimum performance
- Integral head-drip for high performance and improved aesthetics.

Insulation

- Complies with the requirements of the Building Regulations covering Conservation of Fuel and Power - Part L (England and Wales) and Part J (Scotland) when glazed using the correct type of sealed unit
- Sound insulation is dependent on glazing specification. For more information please consult one of our Commercial Sales Managers.

Fully reversible window

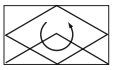

Maximum Sash Sizes		Maximum	
Sash	Finish	WxH cm	kg
Top Turn	White	138x138	60
Side Turn	White	90x120	60
Top Turn	Coloured/Foiled	138x138	60
Side Turn	Coloured/Foiled	90x120	60

These sizes are for guidance only and are dependent on fittings and hardware used.
Please consult REHAU for more detailed information.

70mm Fully reversible window
Top swing

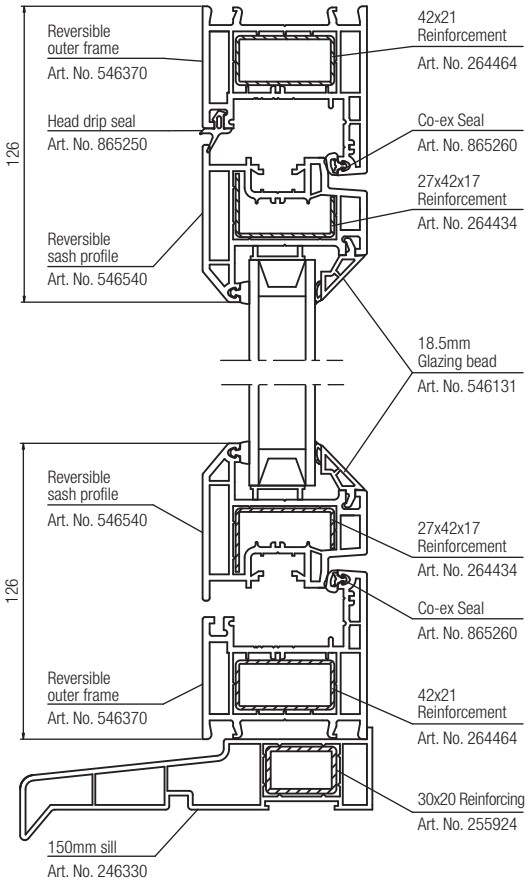

70mm Fully reversible window
Top swing with fixed light

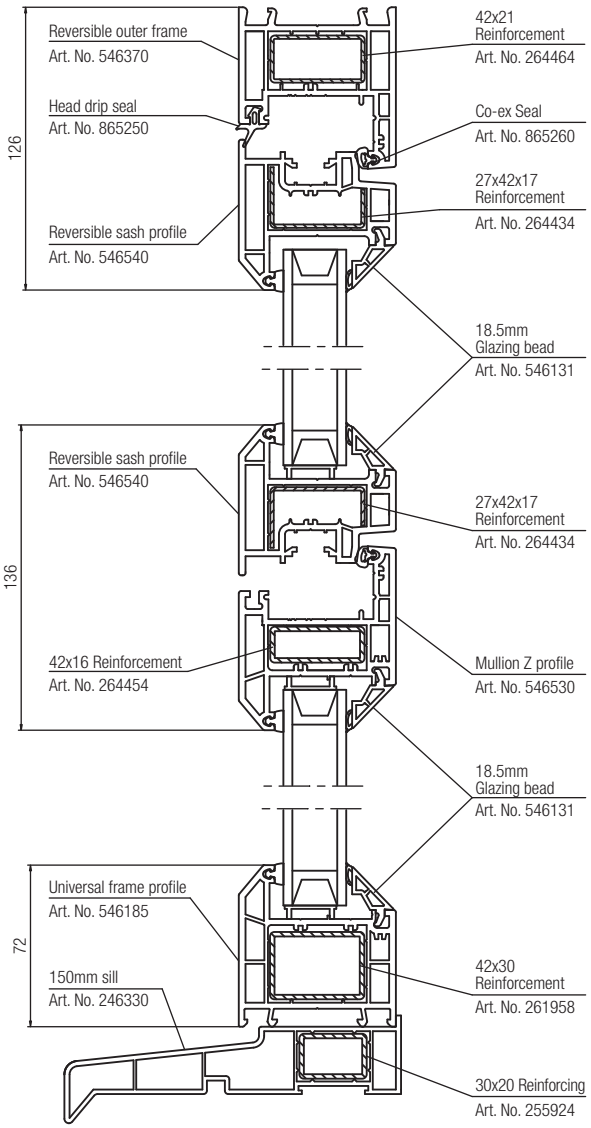

DETAILED DRAWINGS ARE AVAILABLE ON REQUEST

REHAU S706 70MM

FULLY REVERSIBLE WINDOWS

2. PVC-U WINDOW SYSTEMS

2.6 PIVOT WINDOWS – REHAU TRITEC 60MM

Key Characteristics

- Ideal window for high rise applications
- Slim sight-lines to match timber
- All style combinations available: pivot window with fixed light tilt and turns and casement windows
- Choice of outer frame widths to match sight-line requirements or building detail without the need of clip-on profiles
- Wide range of supplementary profiles and sills to suit most building requirements.

Appearance

- Available in White as standard
- Mahogany, Rosewood and Golden Oak laminate options are available to special order
- For other non-standard laminate options and the range of RAL colours available using our Acryl II colour system please refer to page 46.

Reinforcement

- Reinforced with galvanised steel
- For more information please consult our Reinforcement Guidelines ref. 700.620E. and 703.695EN.

Insulation

- Complies with the requirements of the Building Regulations covering Conservation of Fuel and Power - Part L (England and Wales) and Part J (Scotland) when glazed using the correct type of sealed unit
- Sound insulation is dependent on glazing specification. For more information please consult one of our Commercial Sales Managers.

Fittings and Hardware

- Perimeter locking operated from one handle ensures continued weather performance
- Variety of handles, locking systems and hinges to suit most specification requirements
- Manufacturers recommendations on maintenance should be followed.

1 S706 Pivot Window

Glazing

- 4mm to 32mm double glazed units can be accommodated
- Wide choice of sloped, sculptured semi-sloped or square edged glazing beads with or without co-extruded glazing seals.

		Slimline Pivot Window		
Maximum Sash Sizes		Maximum		
Sash	Finish	WxH cm	m^2	kg
Sash T	White	160x120	1.9	100

These sizes are for guidance only and are dependent on fittings and hardware used. Please consult REHAU for more detailed information.

60mm Pivot window
Internally beaded chamfered sash

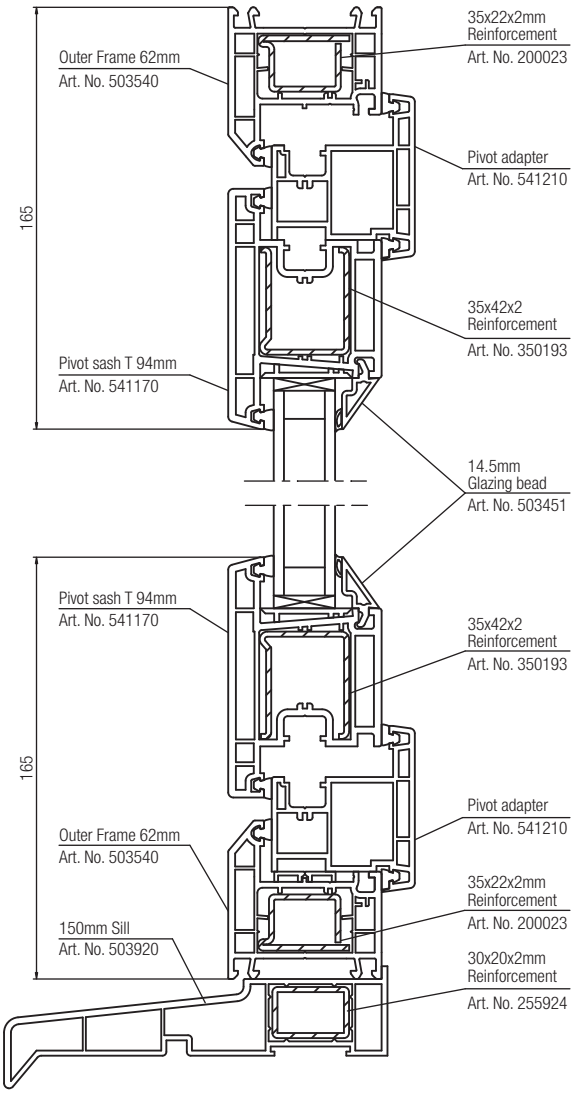

DETAILED DRAWINGS ARE AVAILABLE ON REQUEST

REHAU TRITEC 60MM

PIVOT WINDOWS

2. PVC-U WINDOW SYSTEMS

2.7 VERTICAL SLIDING WINDOWS – REHAU HERITAGE

Key Characteristics

- REHAU Heritage profiles developed following extensive consultation with conservation bodies and housing associations
- Traditional timber aesthetics can be replicated by combining sight-lines of the 42mm, 52mm or 62mm heritage sashes with the deep 81mm heritage bottom rail. The 10mm incrementally stepped sash profiles allow for equal glazing sight-lines to run from top to bottom sash creating an aesthetically pleasing finished product
- Exterior of sash has putty-line aesthetics with matching astragal bar and inside is sculptured with matching astragal bar
- A stepped frame with either mechanically jointed sill or fully welded options
- Optional heritage style horn replicates traditional timber aesthetics
- Triple brush seals for superior draught proofing
- Anti-jemmy Security Bar for optimum security
- Sizes up to 1800 X 3500mm
- Dummy mullion option for keeping slim sight-lines when joining multiple windows.

Appearance

- An all white finish for the traditional appearance is possible using REHAU high performance silicone and EPDM seals
- A Georgian style shaped glazing bar available both internally and externally.

Reinforcement

Galvanised steel reinforcement are required above the following parameters:

- Where frames cannot be adequately anchored to masonry
- Sashes must always be reinforced.

Insulation

- Complies with the requirements of the Building Regulations covering Conservation of Fuel and Power - Part L (England and Wales) and Part J (Scotland) when glazed using the correct type of sealed unit.
- Sound insulation is dependant on glazing specification. For more information please consult one of our Commercial Sales Managers.

Fittings and Hardware

- The REHAU Heritage vertically sliding system can accommodate a wide variety of standard fittings
- Sliding latches enable the sashes to be tilted inwards for ease of cleaning and to be restricted for safety
- Hardware manufacturer's recommendations on maintenance should be followed.

Glazing

- 24mm and 28mm glazing
- Internally glazed sculptured bead for traditional internal joinery detail
- Dry glazed with co-extruded glazing bead.

1 REHAU Heritage Vertical Sliding Window - Golden Oak

REHAU Heritage Approvals
- BS EN 12608 (BS 7412) KM 13358
- BS 7950 KM 76189

		Vertical Sliding Window
Maximum Frame Sizes		Maximum
Sash	Finish	WxH cm
Slim/Intermediate Sash	White	1500 X 3000*
Intermediate/Large Sash	White	1800 X 3500*
Slim/Intermediate Sash	Foiled	1500 X 2500*
Intermediate/Large Sash	Foiled	1650 X 2500*

These sizes are for guidance only and are dependent on fittings and hardware used.
Please consult REHAU for more detailed information.

*it is not permissible to manufacture the product to both maximum height and width.
*The maximum sash weight for slim/intermediate option is 40kg and intermediate/large Sash option is 50kg.

Vertical Section

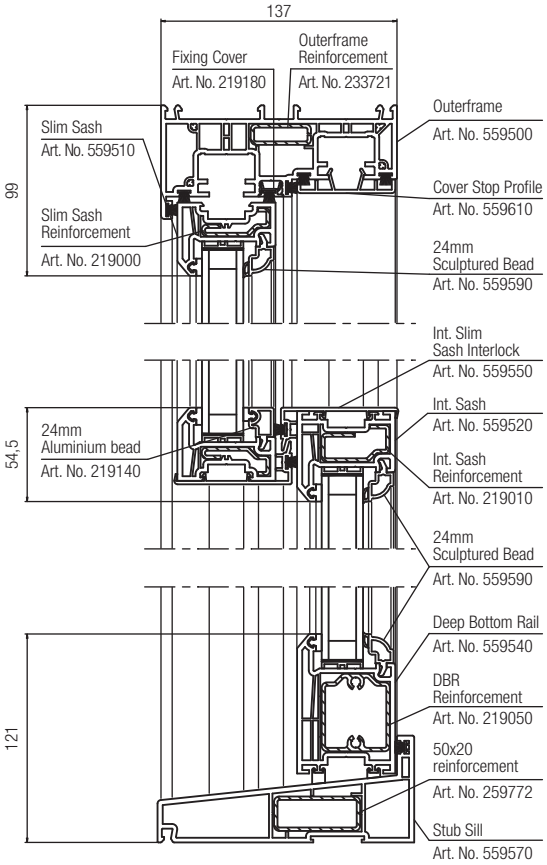

Horizontal Section through mullion detail

TOP SASH

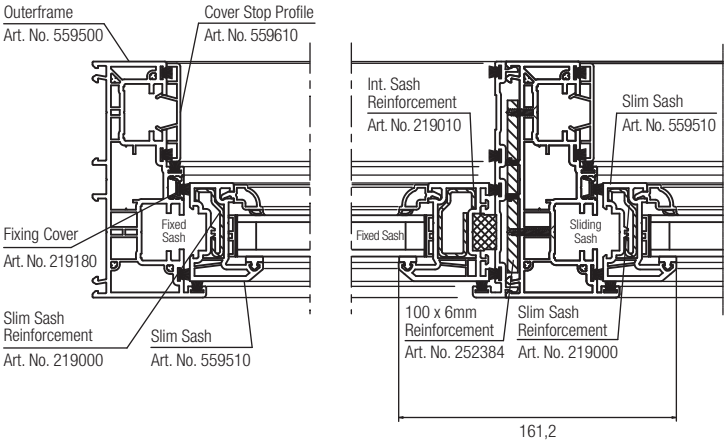

BOTTOM SASH

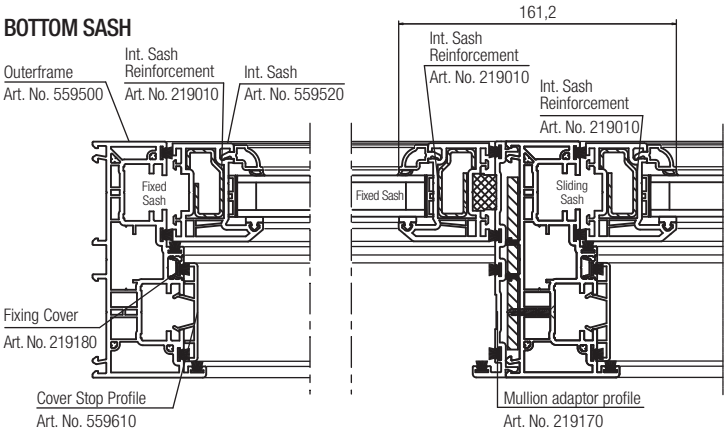

DETAILED DRAWINGS ARE AVAILABLE ON REQUEST

REHAU HERITAGE

VERTICAL SLIDING WINDOWS

3. PVC-U DOOR SYSTEMS

3.1 RESIDENTIAL DOORS – REHAU S706 70MM

Key Characteristics

- Choice of chamfered profiles using REHAU S706 or fully sculptured using the REHAU Edge system
- Available in open-in and open-out styles for a variety of installations
- Compatible with casement, fully reversible, pivot and tilt/turn windows and French tilt/slide and Multi-Fold doors
- Can be incorporated into conservatory designs.

Appearance

- Available in White, Mahogany, Rosewood and Golden Oak On White, Mahogany, Rosewood and Golden Oak both sides as standard
- For other non-standard laminate options and the range of RAL colours available using our Acryl II colour system please refer to page 46.

Reinforcement

- Fully reinforced sash using galvanised steel
- Pre-routed on locking side ensures continuous reinforcement
- REHAU's innovative weldable corner joint system can be incorporated to increase rigidity of the door
- For more information please consult our Reinforcement Guidelines ref. 700.620E. and 706.695EN.

1 REHAU S706 70mm Residential Door

2 REHAU Weldable corner joint system

REHAU S706 Approvals
- BS EN 12608 (BS 7412) KM 13358
- PAS 23/24 KM 66461

Insulation

- Complies with the requirements of the Building Regulations covering Conservation of Fuel and Power - Part L (England and Wales) and Part J (Scotland) when glazed using the correct type of sealed unit
- Sound insulation is dependent on glazing specification. For more information please consult one of our Commercial Sales Managers.

Fittings and Hardware

- Can accommodate most standard locking mechanism including high security bolt systems
- Flag or butt hinges
- Manufacturers recommendations on maintenance should be followed.

Glazing

- 4mm to 42mm glazing
- Glazing depth can be extended to 42mm
- Must be fitted with safety glass, which meets BS 6262
- Dry glazing with glazing bead and gasket or a co-extruded glazing bead
- Choice of sloped or sculptured beads
- Low level glazing option available.

Composite Doors

REHAU offers a dedicated Composite Door outerframe profile for the REHAU S706/REHAU Edge 70mm window/door system. The outerframe profile is suitable for use with a standard 44mm door blank, and has an extra wide glazing upstand which gives a 2mm closing seal gap. The profile is designed to take two brushpiles for weather performance.

		Residential Door	
Maximum Sash Sizes		Maximum	
Sash	Finish	WxH cm	kg
Sash Z	White	100x220	100
Sash T	White	100x220	100
Sash Z	Coloured/Foiled	100x210	100
Sash T	Coloured/Foiled	100x210	100

Sash width shown not less than 590mm.
Butt hinges should be used when producing door sashes under 850mm widths.

70mm Residential door
Low threshold with midrail

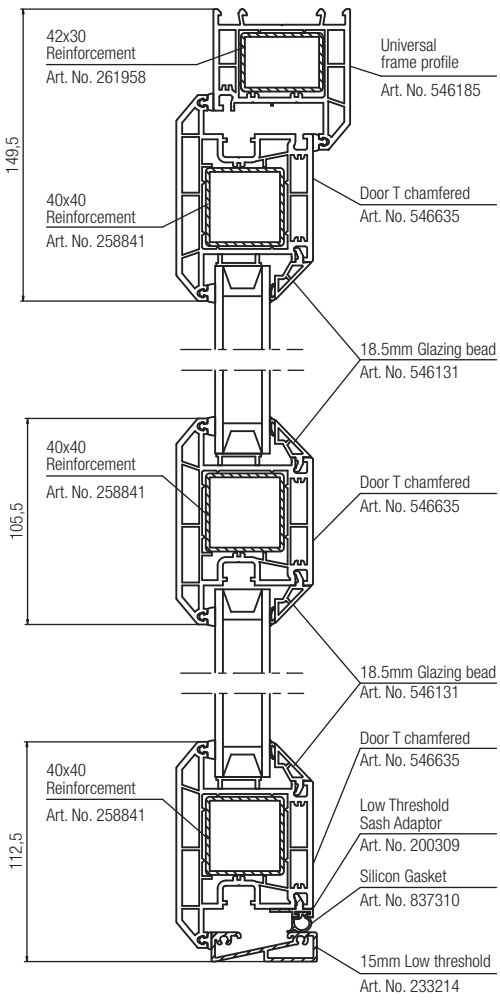

70mm Residential door
Outward opening with midrail

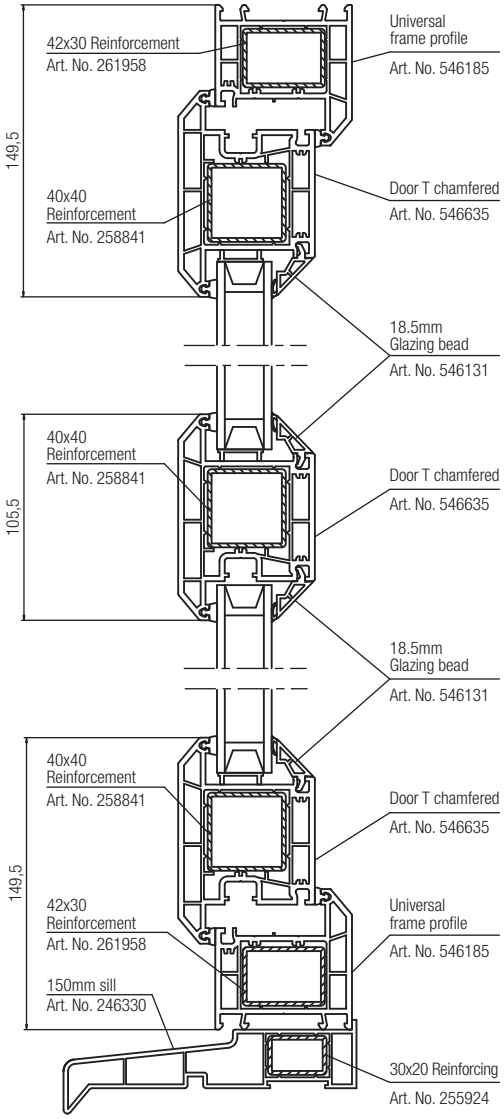

DETAILED DRAWINGS ARE AVAILABLE ON REQUEST

REHAU S706 70MM

RESIDENTIAL DOORS

3. PVC-U DOOR SYSTEMS

3.2 RESIDENTIAL DOORS – REHAU TRITEC 60MM

Key Characteristics

- Available in open-in and open-out styles for a variety of installations
- Low threshold complies with the requirements of Part M Building Regulations for disabled access
- Midrail can incorporate a standard letterplate
- Compatible with casement, tilt/turn, French and pivot windows, French tilt/slide and Multi-Fold doors
- Can be incorporated into conservatory designs.

Appearance

- Available in White, Mahogany, Rosewood and Golden Oak On White, Mahogany, Rosewood and Golden Oak both sides as standard
- For other non-standard laminate options and the range of RAL colours available using our Acryl II colour system please refer to page 46.

Reinforcement

- Fully reinforced sash using galvanised steel
- Pre-routed on locking side ensures continuous reinforcement
- REHAU's innovative weldable corner joint system can be incorporated to increase rigidity of the door
- For more information please consult our Reinforcement Guidelines ref. 700.620E. and 703.695EN.

Fittings and Hardware

- Can accommodate most standard locking mechanism including high security bolt systems
- Flag or butt hinges
- Manufacturers recommendations on maintenance should be followed.

Glazing

- 4mm to 32mm glazing
- Must be fitted with safety glass, which meets BS 6262
- Silver grey gasket with White profiles and like coloured gasket with Mahogany, Rosewood and Golden Oak are less obtrusive
- Dry glazing with glazing bead and gasket or a co-extruded glazing bead
- Choice of sloped or sculptured beads
- Low level glazing option available.

REHAU Tritec Approvals
- BS EN 12608 (BS 7412) KM 13358
- PAS 23/24 KM 66461

Insulation

- Complies with the requirements of the Building Regulations covering Conservation of Fuel and Power - Part L (England and Wales) and Part J (Scotland when glazed using the correct type of sealed unit
- Sound insulation is dependent on glazing specification. For more information please consult one of our Commercial Sales Managers.

		Residential Door	
Maximum Sash Sizes		Maximum	
Sash	Finish	WxH cm	kg
Sash Z Slimline	White	100x220	100
Sash T Slimline	White	100x220	100
Sash Z Slimline	Coloured/Foiled	100x210	100
Sash T Slimline	Coloured/Foiled	100x210	100

Sash width shown not less than 590mm.
Butt hinges should be used when producing door sashes under 850mm widths.

60mm Residential door
Low threshold inward opening

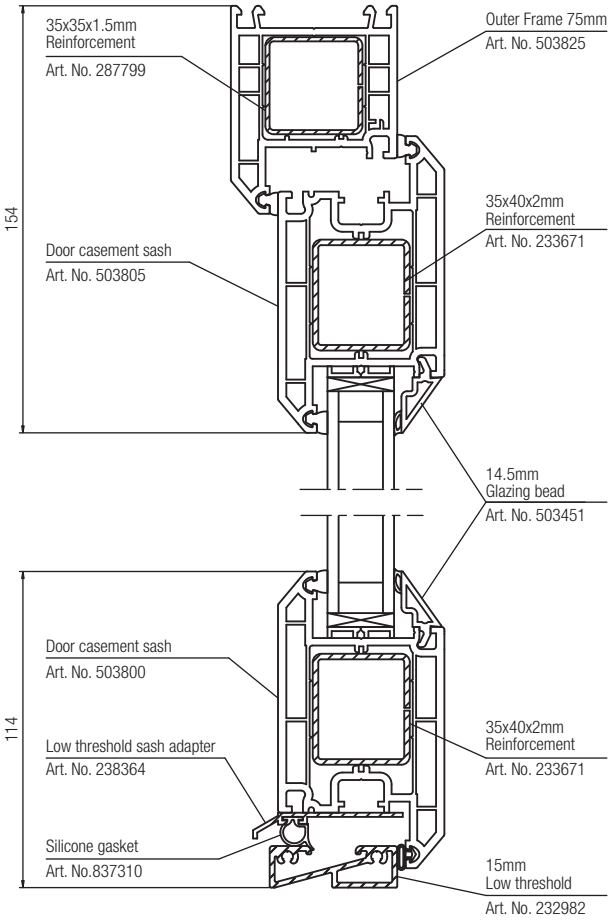

60mm Residential door
Outward opening

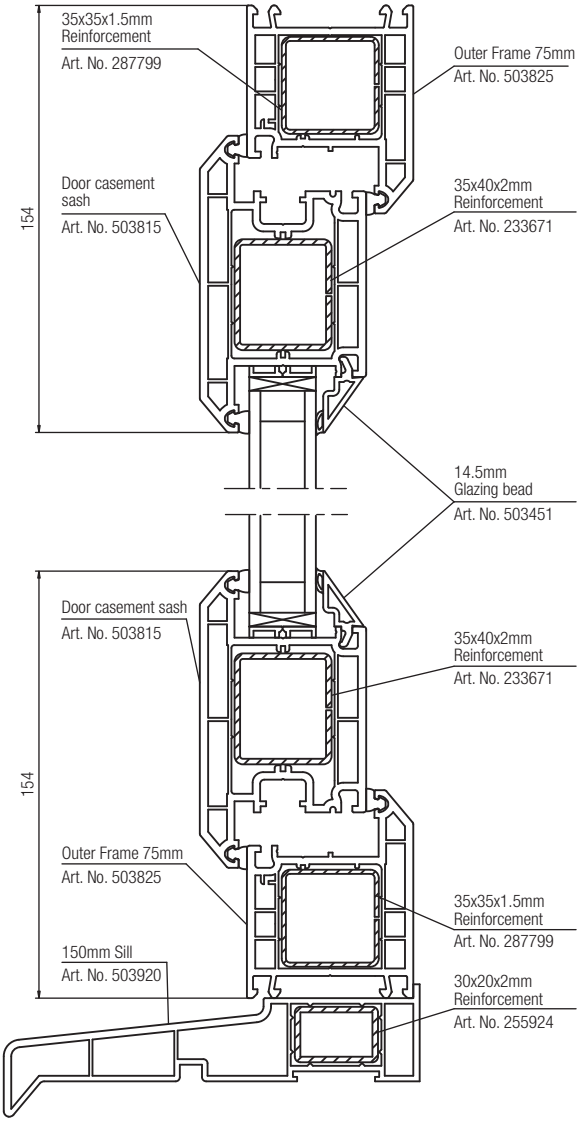

DETAILED DRAWINGS ARE AVAILABLE ON REQUEST

REHAU TRITEC 60MM

RESIDENTIAL DOORS

3. PVC-U DOOR SYSTEMS

3.3 FRENCH DOORS – REHAU S706 70MM AND REHAU TRITEC 60MM

Key Characteristics

- Available in 60mm and 70mm options
- Chamfered or fully sculptured profiles available using REHAU Edge
- Open-in or open-out styles offer increased versatility
- Dummy mullion allows full aperture opening
- Can be constructed for equal or non-equal split.

Appearance

- Available in White, Mahogany, Rosewood and Golden Oak on White, Mahogany, Rosewood and Golden Oak both sides as standard
- For other non-standard laminate options and the range of RAL colours available using our Acryl II colour system please refer to page 46.

Reinforcement

- Fully reinforced sash using galvanised steel
- Pre-routed on locking side ensures continuous reinforcement
- REHAU's innovative weldable corner joint system can be incorporated to increase rigidity of the door
- REHAU Tritec 60mm system offers chamfered profiles.
- For more information please consult our Reinforcement Guidelines ref. 700.620E. and 706.695EN. (REHAU S706), 703.695EN. (REHAU Tritec).

Insulation

- Complies with the requirements of the Building Regulations covering Conservation of Fuel and Power - Part L (England and Wales) and Part J (Scotland) when glazed using the correct type of sealed unit
- Sound insulation is dependent on glazing specification. For more information please consult one of our Commercial Sales Managers

Fittings and Hardware

- Flag, butt or cranked hinges
- A wide range of locking mechanisms
- Restrictor stays and ventilator positions
- Manufacturers recommendations on maintenance should be followed.

Glazing

- 4mm to 32mm glazing
- For REHAU S706 and REHAU Edge systems glazing depth can be extended to 42mm by using a special bead
- Must be fitted with safety glass which meets requirements of BS 6262
- Dry glazed with glazing bead with gasket or co-extruded glazing beads in shaped, sloped or sculptured shapes.

REHAU S706 Approvals
- BS EN 12608 (BS 7412) KM 13358
- PAS 23/24 KM 66461

		French Door 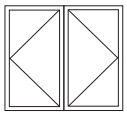	
70mm System Maximum Sash Sizes		**Maximum**	
Sash	Finish	WxH cm	kg
Sash Z	White	85x220	100
Sash T	White	85x220	100
Sash Z	Coloured/Foiled	70x210	100
Sash T	Coloured/Foiled	70x210	100

Sash width shown not less than 590mm.
Butt hinges should be used when producing door sashes under 850mm widths.

		French Door 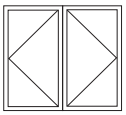	
60mm System Maximum Sash Sizes		**Maximum**	
Sash	Finish	WxH cm	kg
Sash Z	White	80x220	100
Sash Z Slimline	White	80x220	60
Sash T	White	80x220	100
Sash Z	Coloured/Foiled	70x210	100
Sash Z Slimline	Coloured/Foiled	70x210	60
Sash T	Coloured/Foiled	70x210	100

Sash width shown not less than 590mm.
Butt hinges should be used when producing door sashes under 850mm widths.

70mm French Door Outward Opening

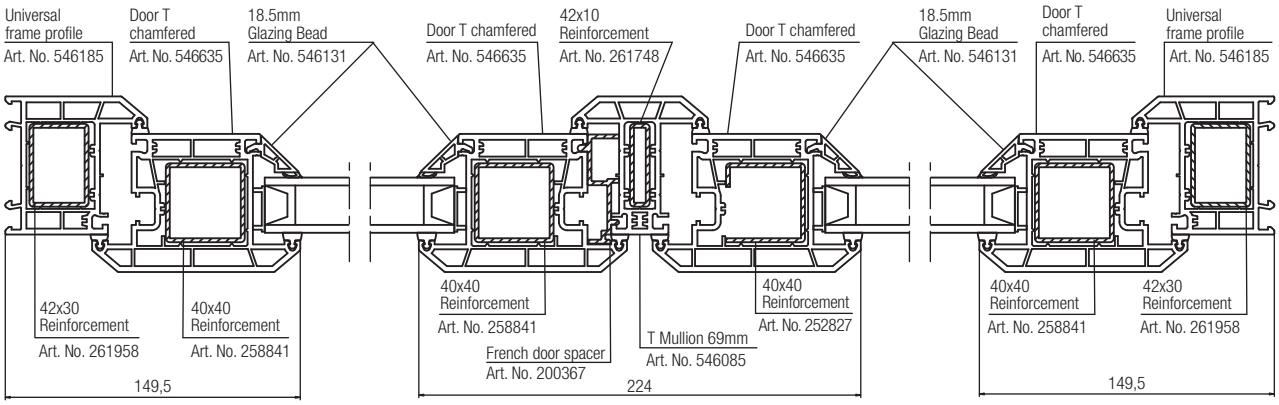

60mm French Door Inward Opening

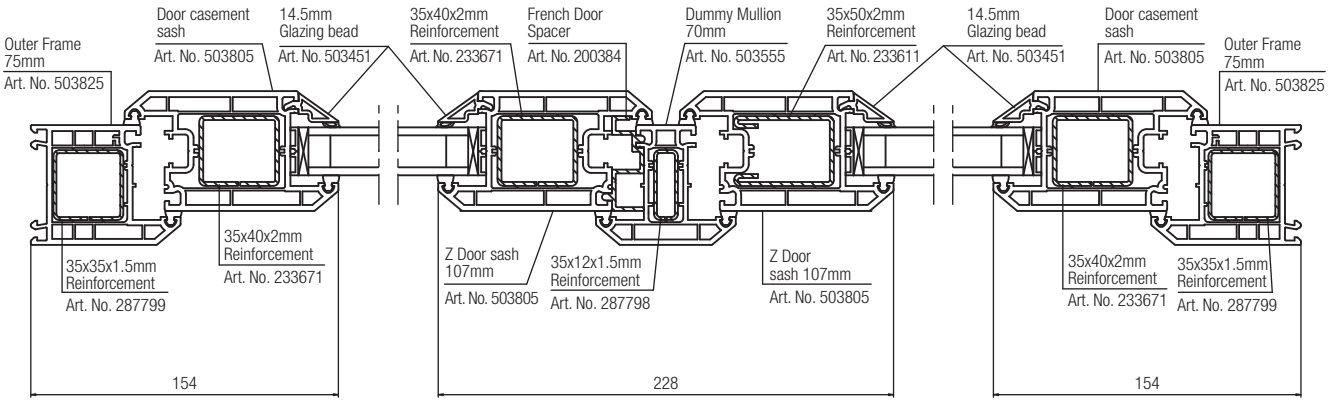

DETAILED DRAWINGS ARE AVAILABLE ON REQUEST

REHAU S706 70MM & REHAU TRITEC 60MM

FRENCH DOORS

3. PVC-U DOOR SYSTEMS

3.4 TILT/SLIDE PATIO DOORS – REHAU S706 70MM AND REHAU TRITEC 60MM

Key Characteristics

- Available in both 70mm or 60mm profiles
- Tilt position facilitates ventilation.

Appearance

- Available in White, Mahogany, Rosewood and Golden Oak on White, Mahogany, Rosewood and Golden Oak both sides as standard
- For other non-standard laminate options and the range of RAL colours available using our Acryl II colour system please refer to page 46.

Reinforcement

- Fully reinforced sashes using galvanised steel
- Pre-routed steel on locking side ensures continuous reinforcement
- REHAU's innovative weldable corner joint system can be incorporated to increase rigidity of the door
- For more information please consult our Reinforcement Guidelines ref. 700.620E. and 706.695EN. (REHAU S706), 703.695EN. (REHAU Tritec).

Insulation

- Complies with the requirements of the Building Regulations covering Conservation of Fuel and Power - Part L (England and Wales) and Part J (Scotland) when glazed using the correct type of sealed unit
- Sound insulation is dependent on glazing specification. For more information please consult one of our Commercial Sales Managers.

Fittings and Hardware

- Multi-point perimeter locking mechanism
- Internal only or internal/external handles
- Manufacturers recommendations on maintenance should be followed.

Glazing

- 4mm to 32mm glazing
- For REHAU S706 and REHAU Edge systems glazing depth can be extended to 42mm by using a special bead
- Must be fitted with safety glass which meets requirements of BS 6262
- Dry glazed with glazing bead with gasket or co-extruded glazing beads in shaped, sloped or sculptured shapes.

		Tilt/Slide Patio Door 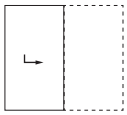	
Maximum Sash Sizes		**Maximum**	
Sash	Finish	WxH cm	kg
Sash Z	White	150x230	100
Sash Z	Coloured/Foiled	110x230	100

These sizes are for guidance only and are dependent on fittings and hardware used.
Please consult REHAU for more detailed information.

70mm Tilt and slide door

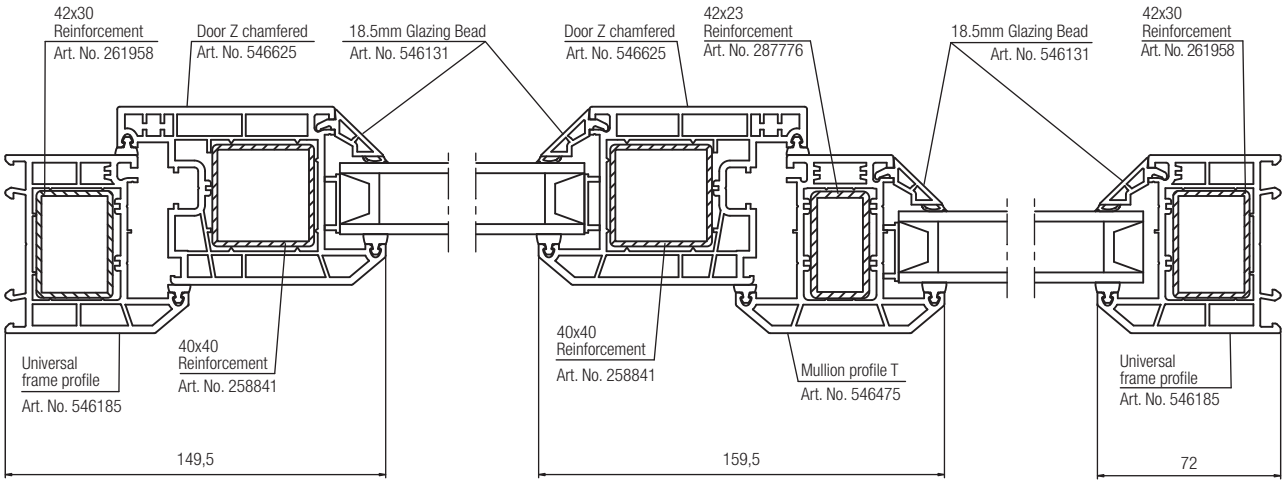

60mm Tilt and slide door

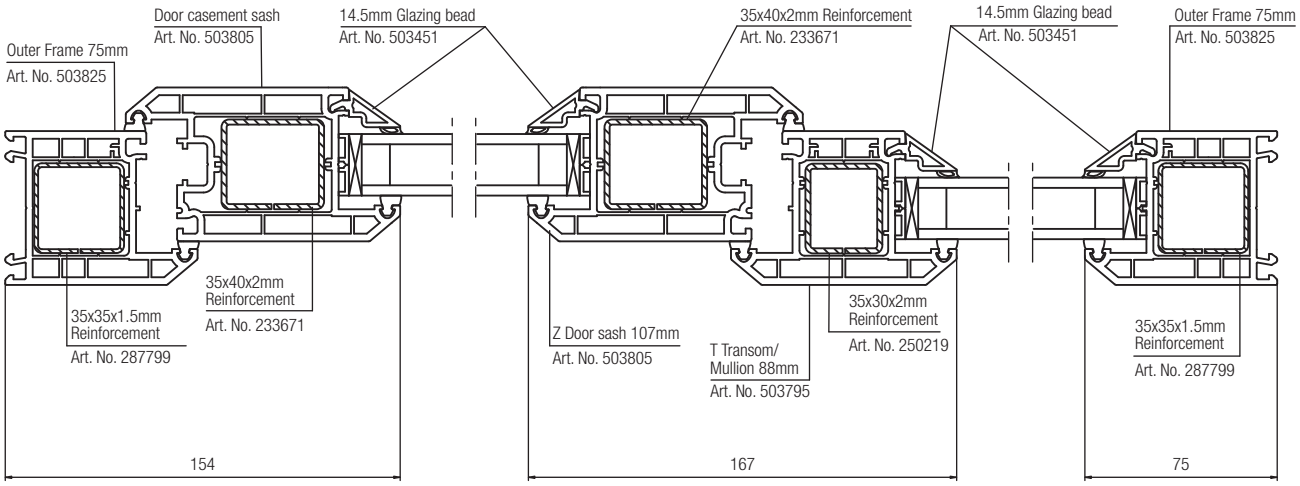

DETAILED DRAWINGS ARE AVAILABLE ON REQUEST

REHAU S706 70MM & REHAU TRITEC 60MM

TILT/SLIDE PATIO DOORS

3. PVC-U DOOR SYSTEMS

3.5 IN-LINE PATIO DOORS – REHAU S717

Key Characteristics

- All welded construction offers greater durability
- 2, 3 and 4 pane options available
- Double brush seals on all four sides ensures excellent sealing properties
- 70mm frame depth enables coupling to both the REHAU Tritec and REHAU S706 systems
- Slim visible faces.

Appearance

- Available in White and Mahogany woodgrain as standard
- For other non-standard laminate options and the range of RAL colours available using our Acryl II colour system please refer to page 46.

Reinforcement

- Fully reinforced using galvanised steel.

Insulation

- Complies with the requirements of the Building Regulations covering Conservation of Fuel and Power - Part L (England and Wales) and Part J (Scotland) when glazed using the correct type of sealed unit
- Sound insulation is dependent on glazing specification. For more information please consult one of our Commercial Sales Managers.

Fittings and Hardware

- Adjustable tandem rollers
- A wide range of multi-point locking mechanisms
- Traditional D style or tilt/turn style handles
- Manufacturers recommendations on maintenance should be followed.

Glazing

- 20, 24 or 28mm double glazing
- Must be fitted with safety glass which meets requirements of BS 6262
- Dry glazed with a co-extruded glazing bead.

In-line Patio door
REHAU S717

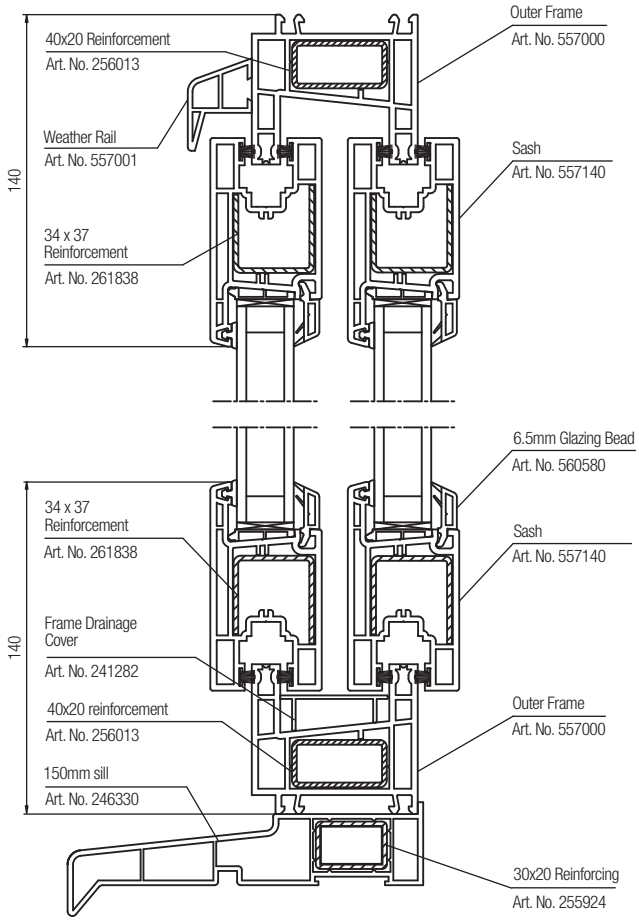

DETAILED DRAWINGS ARE AVAILABLE ON REQUEST

In-Line Patio Door

X	O

Maximum Sash Sizes		Maximum	
Sash	Finish	WxH cm	kg
Sash	White	120x210	40

Sash width shown not less than 590mm.
Butt hinges should be used when producing door sashes under 850mm widths.

Max. element size: 242x221 2 Pane
Max. element size: 362x221 3 Pane
Max. element size: 400x221 4 Pane

REHAU S717 Approvals
Performance tested to requirements
- BS 6375 Parts 1, 2, 3
- Reports - 261/40404994 and 261/4095711

3. PVC-U DOOR SYSTEMS

3.6 REHAU MULTI-FOLD DOORS – REHAU S706 70MM AND REHAU TRITEC 60MM

The REHAU Multi-Fold Door is available in both REHAU Tritec 60mm and S706 70mm.

Great appearance and advanced performance mean inevitable demand for a modern and sophisticated door system full of benefits.

The REHAU Multi-Fold Door boasts superior design and engineering to complement outstanding versatility.

- Panels can be connected in a number of configurations so that the doors can be bi-fold or multi-fold allowing greater flexibility. This is ideal for connecting any rooms in the house or the house to the garden outside, where they provide additional natural light to the room. The door concertinas smoothly and is remarkably easy to open.

- It is vital that the doors are able to endure UK weather conditions therefore REHAU Multi-Fold Doors have been subject to vigorous in-house testing.

- Suitable for both domestic and commercial applications as they create openings and partitions.

- White, Mahogany and Golden Oak finishes are available to meet individual tastes.

- REHAU Multi-Fold Doors can be an alternative to French and Patio Doors but can also be used in conjunction with them to accentuate open plan living.

As with all REHAU products the specification, fabrication and installation are results of quality engineering, placing our products firmly at the forefront of the market.

REHAU systems have superb aesthetics, easy fabrication and excellent performance.

Surface Finish
REHAU is renowned for its quality; it maintains a lasting gloss finish and reduced maintenance.

3 Chamber Profiles
All REHAU 60mm and 70mm profiles have three chambers for improved thermal performance and efficiency.

Easy Glazing
REHAU's proven single leg glazing ensures that on-site glazing is easy and secure when fitted.

Specification
REHAU 60mm and 70mm systems fully adhere to any commercial specification.

	Maximum overall frame for a White Multi-Fold Door	Maximum overall frame for a coloured or foiled Multi-Fold Door
WIDTH		
Opening to the outside	4m	3m
For an internal door	5m	4m
HEIGHT	2.3m	2.2m
Maximum sash width	900mm	900mm

70mm Multi-Fold Door

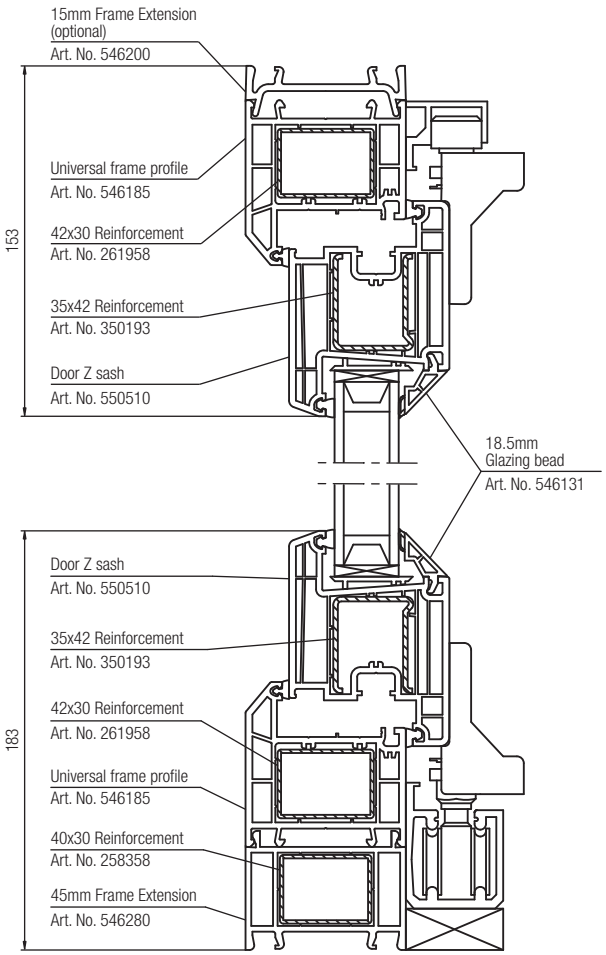

60mm Multi-Fold Door

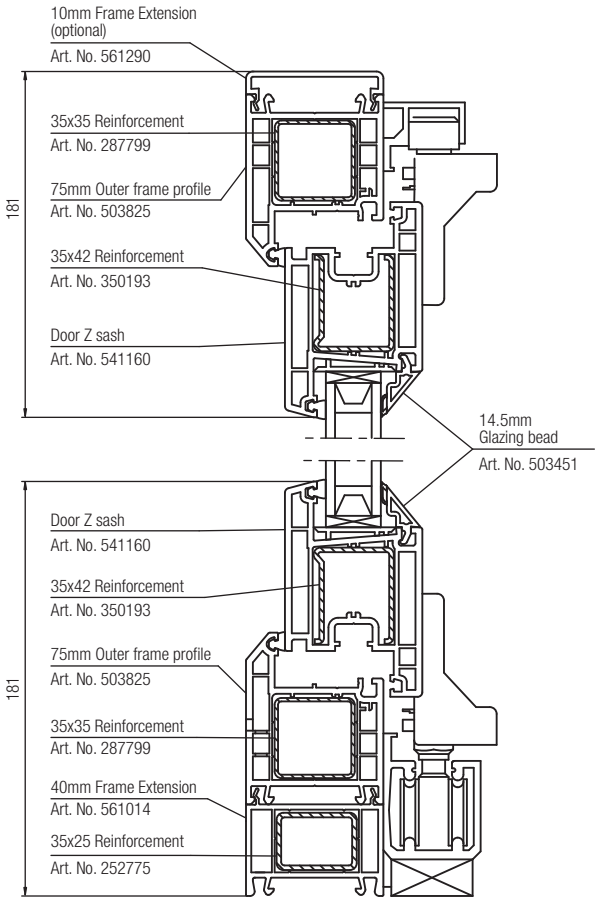

Multi-Fold Door Schemes

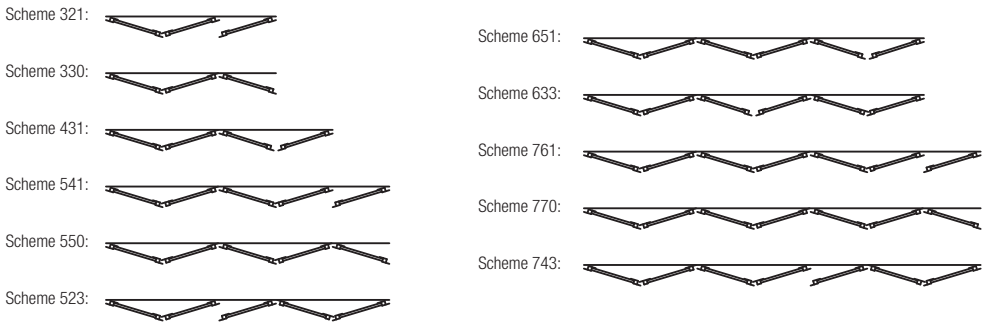

DETAILED DRAWINGS ARE AVAILABLE ON REQUEST

REHAU S706 70MM & REHAU TRITEC 60MM

MULTI-FOLD DOORS

3. PVC-U DOOR SYSTEMS

3.7 REHAU S706 RAUFERNO – FIRE RATED DOORS AND WINDOWS

No longer restricted by traditional fire rated materials and construction techniques, RAUFERNO gives you the freedom to use PVC-U fire resistant windows and fire resistant doors and still comply fully with 2006 Building Regulations for most protected areas, due to full certification to BS 476 Parts 20 and 22.

The RAUFERNO PVC-U fire resistant windows and fire resistant door system, a patented industry first, is based upon and has all of the design and security benefits of the REHAU S706 70mm profile. The system provides an array of design options for you to install throughout a building in the following areas:-

- Fire escape routes
- Entrance halls
- Deck access flats
- Fixed windows (close to other buildings)
- Windows (fixed) / doors between a house and integral garage
- Fixed fanlights (and sidelights coupled to doors).

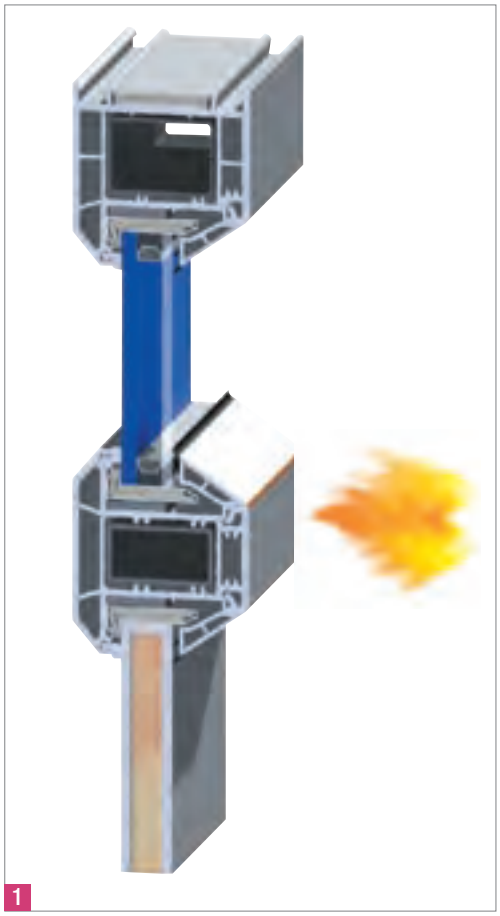

1

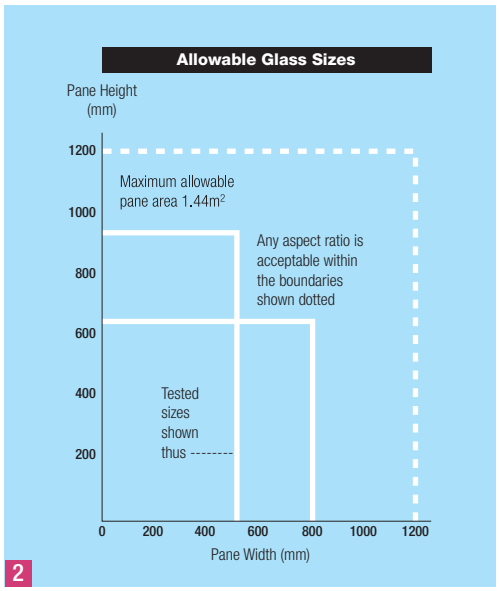

2

RAUFERNO provides you with all the safety and security of traditional fire rated products, but with PVC-U's added inherent benefits of:

- Improved thermal insulation
- Sound proofing
- Characteristic low maintenance
- Excellent security options.

Fixed Light Testing (Integrity Glass)

- BS 476: Part 22 1987 – clauses 6 and 7 (30 minutes)
- Warrington Fire Research Certificate No. C81844
- Maximum sizes (Figure 2).

Fixed Light Testing (Insulated Glass)

- BS 476: Part 22 1987 – 30 minute assessment
- Warrington Report 185641
- 604mm width or 1072mm height and maximum glazing area of 0.563m^2.

Door and Sidelight Testing

- BS 476: Part 22 1987 – clauses 6 and 7
  Door and Sidelight - 30 minutes
  Single door - 60 minutes
- Warrington Fire Research Certificate No. 71058-WSH and 102174.

1 Fixed Light

2 Fixed Light Testing

3 Door and Sidelight

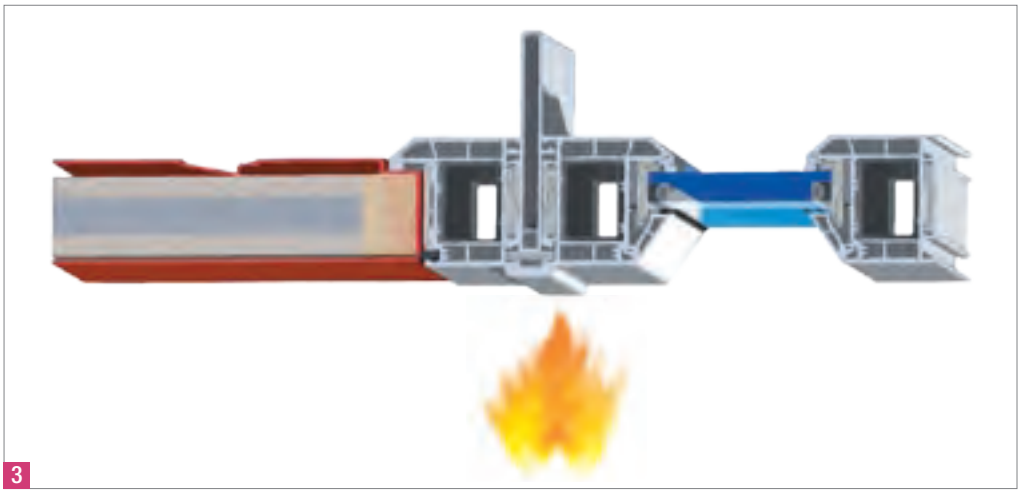

3

Specification

- 70mm frame depth
- Fire rated composite door panel
- Door opens towards fire hazard.

Door Options

- Variety of colours
- Choice of letterboxes available in Silver, Gold, White, Black, Brass and Stainless Steel finishes
- Choice of fire rated viewers available in Black, White or Gold
- Choice of panel styles and colours
- Fixed panel with and without midrail.

Installation

- REHAU S706 RAUFERNO must be installed by installers trained in recognised scheme for 'fire products'.

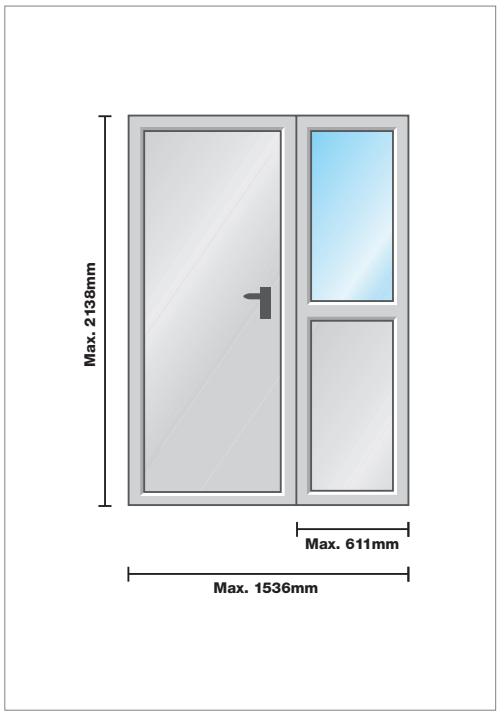

REHAU S706 RAUFERNO

FIRE RATED DOORS AND WINDOWS

4. CONSERVATORIES

Whatever style, design and finish you choose, REHAU conservatories offer optimum structural capability matched by stylish appearance.

REHAU window and door systems are compatible with all major conservatory roof systems to provide a complete product solution.

REHAU window and door systems offer the opportunity to choose a conservatory from a variety of shapes and designs. Anything from the straightforward lean-to conservatory to the more elaborate Victorian or Edwardian designs all rely on the structural capability that the REHAU windows and doors provide to support the roof.

When very large spaces are required, then portal frames would be considered in conjunction with your windows, doors and roof. This combination allows structures such as swimming pool enclosures and large function rooms for hotels or nursing homes to be possible and these are well suited to adding our multi fold door offering to truly bring the outside, inside.

REHAU fabricators and installers have a reputation for a thoroughly professional approach and pride themselves on the friendly and knowledgeable guidance they are able to offer at every stage of design and installation.

The service is complete right through from helping you plan and choose the conservatory that best matches your needs and project, to the attention to details like planning permission and building regulation.

5. REHAU POLYTEC 50S CURTAIN WALLING

ENERGY-EFFICIENT GLAZING SOLUTIONS

Composite curtain walling system REHAU Polytec 50S combines the benefits of Aluminium, Steel and Polymer materials providing an outstanding thermal performance with an U_f-Value of up to 0.88 W/m²K.

Characteristics

The REHAU Polytec 50S curtain walling system is suitable for both new build and replacement, vertical or inclined curtain walling and single or multi-storey buildings. Straight or polygon construction is also possible.

It is a slim system with face profiles measuring just 50mm and combines the economics of polymer materials with the advantages of conventional transom/mullion construction. Using a wide range of commercial steel profiles can accommodate variable static load factors. There is a corresponding selection of Snap-On profiles for design purposes. Other benefits include:

- Reduced thermal losses through the building shell and CO_2 emissions
- Beneficial to meet the more stringent requirements of Part L (Oct 2010)
- Cost saving on the M&E package
- System is certified by the Passive House Institute and suitable for Zero Carbon Buildings with an U_f-Value up to 0.88 W/m²K.

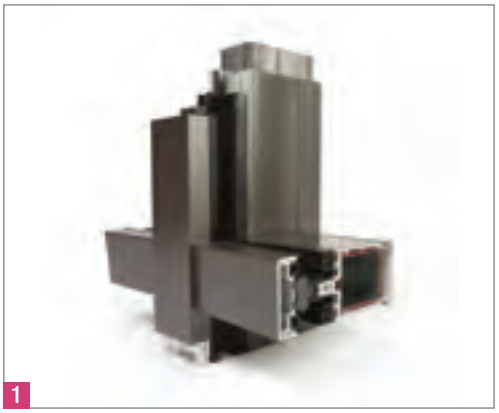

1 Isometric Transom / Mullion

2 Cross section

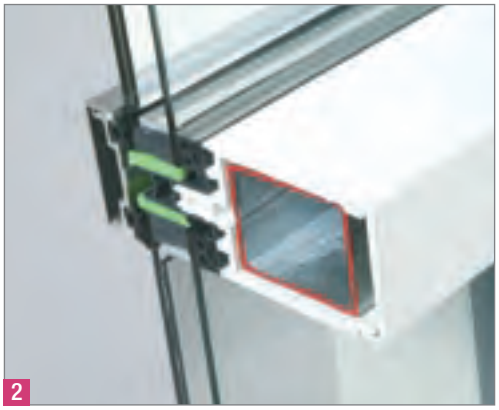

Appearance

REHAU Polytec 50S is available in white and a vast range of RAL colours using the REHAU Acryl II colour coating system for PVC-U profiles and powder coating for aluminium profiles. Please refer to page 46.

Insulation

Outstanding thermal performance with U_f-Value up to 0.88 W/m²K, enabling cost effective large glazed areas with reduced energy losses and for increased use of natural day light.

Glazing

The system is designed to work with glazing units or panels from 6 – 40mm. All types of opening elements can be included including both REHAU Tritec and REHAU S706 window system.

Structural Strength

Because of the use of box steel reinforcement sections (3 times stronger than Aluminium, E_{Steel} = 210,000 N/mm², E_{Alu} = 70,000 N/mm²)

- Achieving a greater unsupported span
- Reduced profile depth for increased floor space
- Suitable for exposed locations.

Maximum Sizes

Maximum mullion and transom sizes, spans and dimensions depend on design loads. Project specific calculations need to be carried out. Please contact one of our Commercial Manager or our regional Sales Office for further advice.

REHAU POLYTEC 50S CURTAIN WALLING

TECHNICAL DETAIL

REHAU POLYTEC 50S / Mullion detail

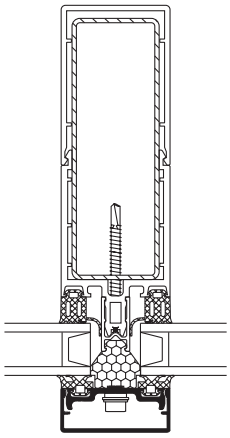

Encapsulates both REHAU 60mm and 70mm Systems

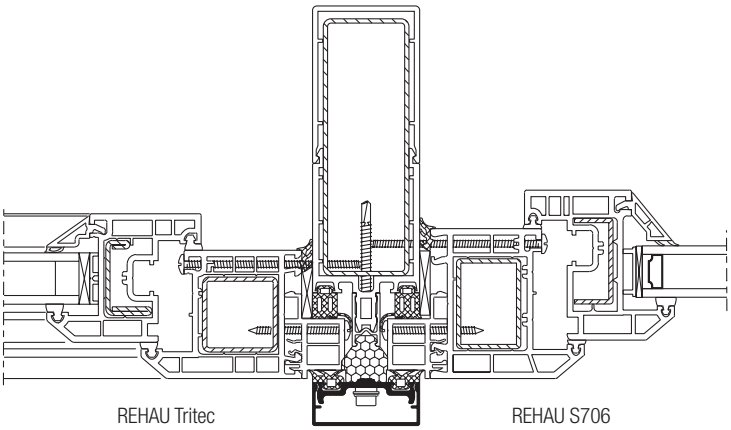

Profile Design and Technical Data	
Sight Lines	50mm
Range of Profile Depth	71 - 134mm
Range of Glazing Weight	up to 180kg
Thermal Performance	U_f = 0.88 - 1.3 W/m²K (depending on profile combination)
Max. „I“ Value (Steel)	$I_{x\ Steel}$ up to 221 cm⁴ (equivalent of 663 cm⁴ in Aluminium)
Weather Performance (EN 12154/ENV 13050)	RE_{1950}
Wind Resistance (EN 13116)	± 2.0kN/m² (safety test ± 3.0kN/m²)
Air Permeability (EN 12152)	AE
Impact Resistance (EN 14019)	E5/I5
Sound Insulation (EN ISO 140-3)	R_{WP} up to 43dB (depending on glass specification)

Approvals
The REHAU Polytec 50S curtain walling system has been type tested at IFT Rosenheim to meet with BS EN 13830. Reports can be made available on request.

REHAU POLYTEC 50S

CURTAIN WALLING

6. COLOURS AND FINISHES

REHAU OFFERS ITS PVC-U SYSTEMS IN OVER 170 DIFFERENT COLOUR OPTIONS

REHAU offers its PVC-U systems in over 170 different colour options through the use of two distinctive systems, Acryl II colour coating and lamination.

Acryl II

The Acryl II colour coating system is the result of a development by our automotive division, which has used a similar system for many years to produce colour matched polymer car bumpers.

It is a two component acrylic coating system, which involves tightly controlled preparation, application of the cross-linking polyurethane acrylic by wet spraying and then air curing. The finish is durable, colour fast and weather resistant. Acryl II coating does not affect the impact resistance of the PVC-U profile.

There is a choice of over 150 RAL colours and the system allows for optimum versatility and creative use of colour. For example, the frame and the sash or the inside and the outside can be finished in two different colours. Alternatively, sills or beading can be finished to contrast with the frame. Due to the flexibility of the system it is suitable for both small and large-scale installations.

Example laminate PVC-U options

1 Golden Oak

2 Rosewood

3 Mahogany

4 Cream (REHAU Heritage only)

5 Schwartz Brawn (Black)

6 Anthracite Grey

7 Grey

8 Natural Oak

9 White Ash

Laminate PVC-U

REHAU have a range of standard laminate options. For most systems they are Mahogany, Golden Oak and Rosewood on White and Mahogany, Rosewood and Golden Oak both sides.

A further range of 25 non-standard laminate options are available to special order. Laminate can be applied to the inside or outside or both sides of white base profile and to both sides of brown and acorn base profiles. The finish is colourfast, weather resistant and durable.

For more details of availability of these systems please contact your nearest REHAU Sales Office and ask to talk to our of our Commercial Sales Managers.

7. REHAU UNDERFLOOR HEATING

THE FAVOURED CHOICE FOR INDUSTRIAL PROFESSIONALS

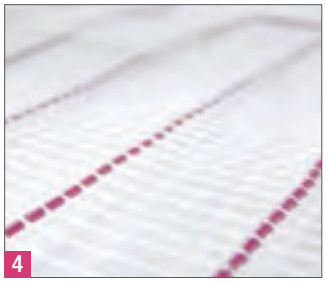

1 Underfloor Heating System

2 REHAU Tacker System

3 REHAU EVERLOC™ - Compression Sleeve Joint

4 SOLELEC - Low cost solution and rapid installation

Underfloor heating is increasingly being specified over traditional radiator systems as the preferred modern-day heating solution.

Underfloor Heating System

The REHAU underfloor heating systems are currently providing cost-effective comfort and safety in a variety of installations across the world, including offices, factories, hospitals and schools.

REHAU underfloor heating provides the right amount of heat in the right place and the right time with a solution for all applications, and an intelligent control system that reduces energy wastage.

Floor Systems:

REHAU Railfix/Raufix System
REHAU Tacker System
REHAU Diffusion Plate System
REHAU Floating Floor System
REHAU Sprung Floor System
REHAU Industrial System

REHAU Intelligent Controls System

Designed specifically for underfloor heating systems with a user-friendly control system

- Full range of low-voltage thermostats and master control units, which can be wired up in a 'daisy-chain' configuration, specifically reducing installation costs
- Weather compensation available with REHAU FS controller
- Intelligent system uses self-learning capabilities to optimise its performance, reaching optimum levels after 3-10 days. This allows minimum overshoot and higher comfort levels, unlike the 'hunting' behaviour associated with other systems.

REHAU EVERLOC™ - Heating and Plumbing Systems

The REHAU flexible pipe system consists of an integrated range of flexible high density cross-linked polyethylene (PE-Xa) pipes and slim, neat brass fittings. The system allows the engineer to achieve an effective, quiet system, with features making it easy to conceal and ideal for hot and cold systems, central heating and Underfloor Heating. A unique REHAU jointing system means the joints are made quickly, with the result being permanent and secure. The pipe can be supplied on a roll, or in long lengths. The REHAU pipe-in-pipe system removes the need for a conventional ducting system resulting in a time saving, and maximises efficiency by reducing the number of joints and waste from off cuts.

All applications are covered: one pipe serves all service applications from 16 to 32mm, with a 40 to 63mm option for mains, risers and other applications.

SOLELEC - Low cost solution and rapid installation

Whether you are planning to install underfloor heating in houses, flats, public buildings, large commercial sites or small conservatories you will benefit from the features of the REHAU SOLELEC system.

- For more information please contact your regional Sales Office.

DATA CABLE MANAGEMENT SYSTEMS

8.

FAST AND SIMPLE

Being a leading European brand name in cable management gives REHAU a distinct edge in terms of functional design and expertise. The development of products specifically for the UK market reflects REHAU's strong commitment to its UK customers.

Whether for new build, refurbishment or retro-fit into existing properties, REHAU has all the answers for professional cable management systems.

PROFILA and COMPACT Data are a family of data cabling trunking systems. Both offer compartment profile for fast and easy installation.

REHAU has a portfolio that meets every need, from office environments to specialist, commercial and heavy duty installations.

The range includes:-

- 140 x 50mm and 180 x 65mm two compartment systems
- Designed to meet the latest standards and regulations for the installation of Cat 6, Cat 6A and Cat 7 data cabling
- Fast and simple to install
- Variable angle internal and external corners
- Quiet aesthetics, trunking disappears into a building
- Adapter to join different sized systems together
- Adjustable depth socket box to help compliance with BS EN 50174 requirements
- Modular accessories for fast installation and reduced stock
- Compliant with all relevant regulations and standards.

- For more information please contact your regional Sales Office.

9. REHAU WINDOW AND DOOR SUMMARY

Product Type	REHAU Tritec	S706	S717	REHAU Heritage	REHAU Polytec 50S
Casement Windows	■	■			
French Windows	■	■			
Tilt/Turn Windows	■	■			
Fully Reversible Windows		■			
Pivot Windows	■				
Vertical Sliding Windows				■	
Residential Doors	■	■			
French Doors	■	■			
Tilt/Slide Patio Doors	■	■			
In-Line Patio Doors			■		
Multi-Fold Doors	■	■			
Composite Doors	■				
RAUFERNO		■			
Curtain Walling					■
Energy Efficiency	■	■		■	■

UK & IRELAND SALES OFFICES

London, REHAU Ltd, The Building Centre, 26 Store Street, London WC1E 7BT Phone: 0207 580 6155 Fax: 0207 307 8595 **Slough,** Units 5 J & K, Langley Business Centre, Station Road, Langley, Slough SL3 8DS Phone: 01753 588500 Fax: 01753 588501 **Manchester,** Brinell Drive, Irlam, Manchester M44 5BL Phone: 0161 777 7400 Fax: 0161 777 7401 **Glasgow,** Phoenix House, Phoenix Crescent, Strathclyde Business Park, Bellshill, North Lanarkshire ML4 3NJ Phone: 01698 503700 Fax: 01698 503701 **Dublin,** 9 St. Johns Court, Business Park, Swords Road, Santry, Dublin 9 Phone: 00353 (0)1 8165020 Fax: 00353 (0)1 8165021

This document is protected by copyright. All rights based on this are reserved. No part of this publication may be translated, reproduced or transmitted in any form or by any similar means, electronic or mechanical, photocopying, recording or otherwise, or stored in a data retrieval system.

Typical New Build Construction

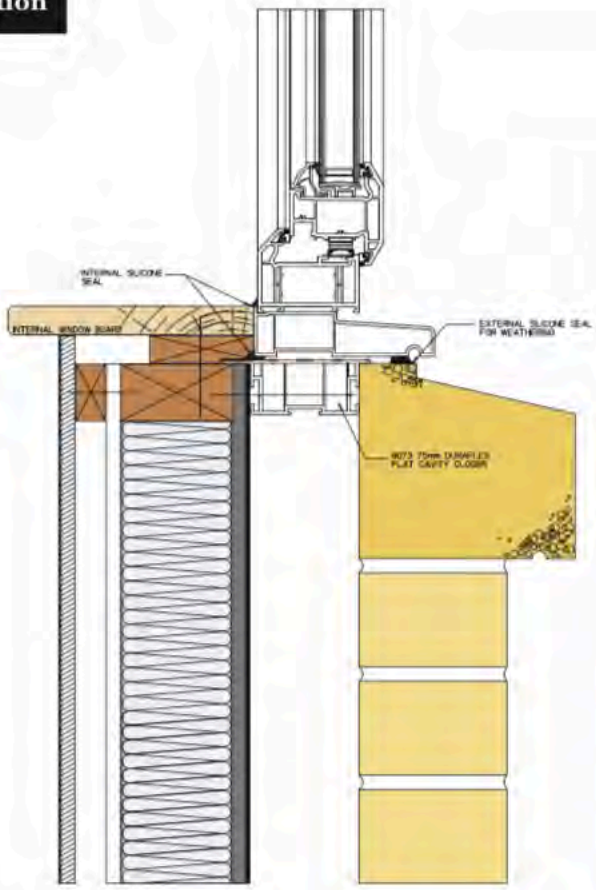

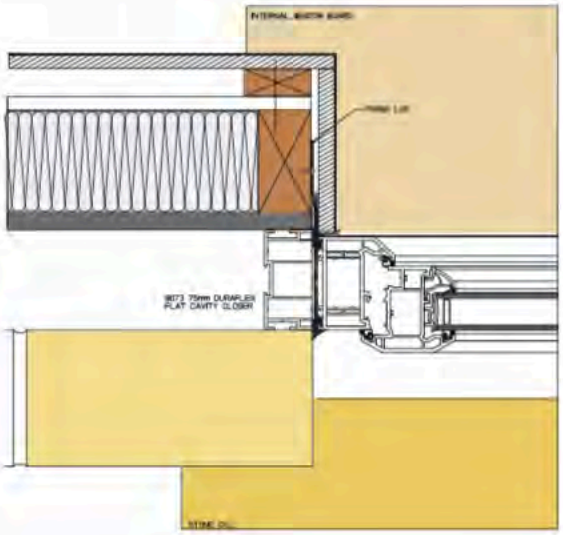

WINDOW SILL

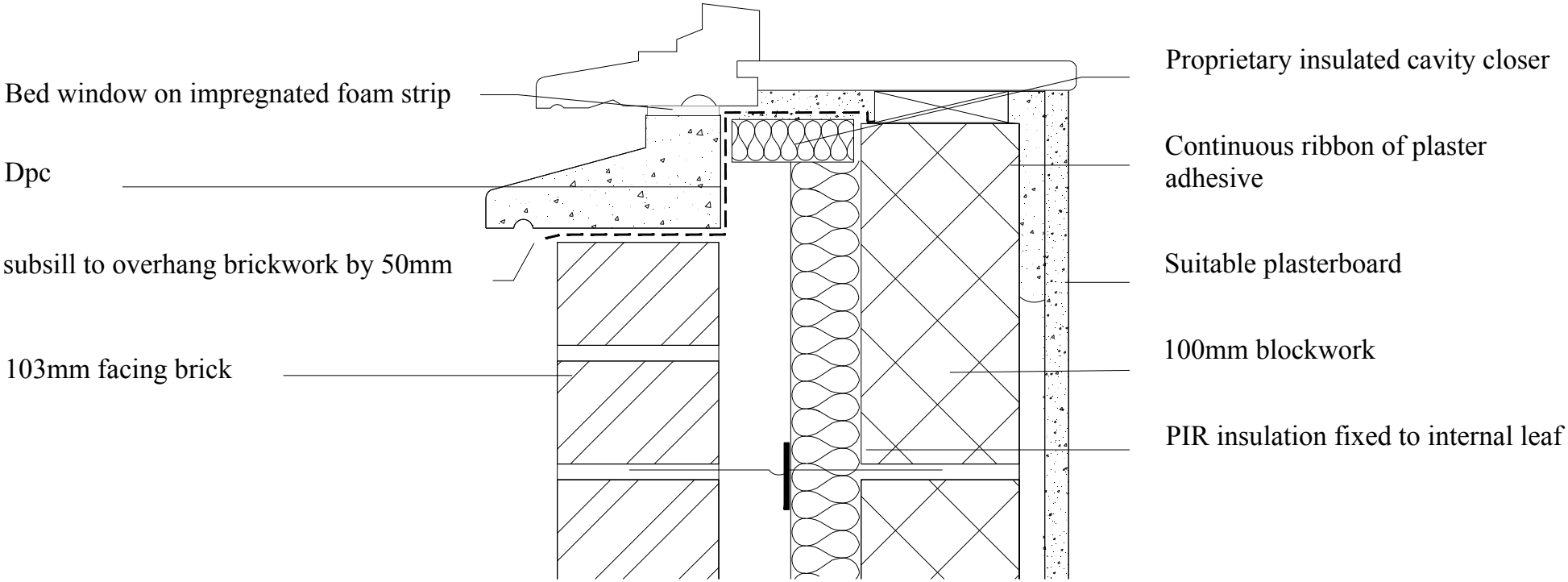
Bed window on impregnated foam strip
Dpc
subsill to overhang brickwork by 50mm
103mm facing brick
Proprietary insulated cavity closer
Continuous ribbon of plaster adhesive
Suitable plasterboard
100mm blockwork
PIR insulation fixed to internal leaf

WINDOW HEAD AND LINTEL

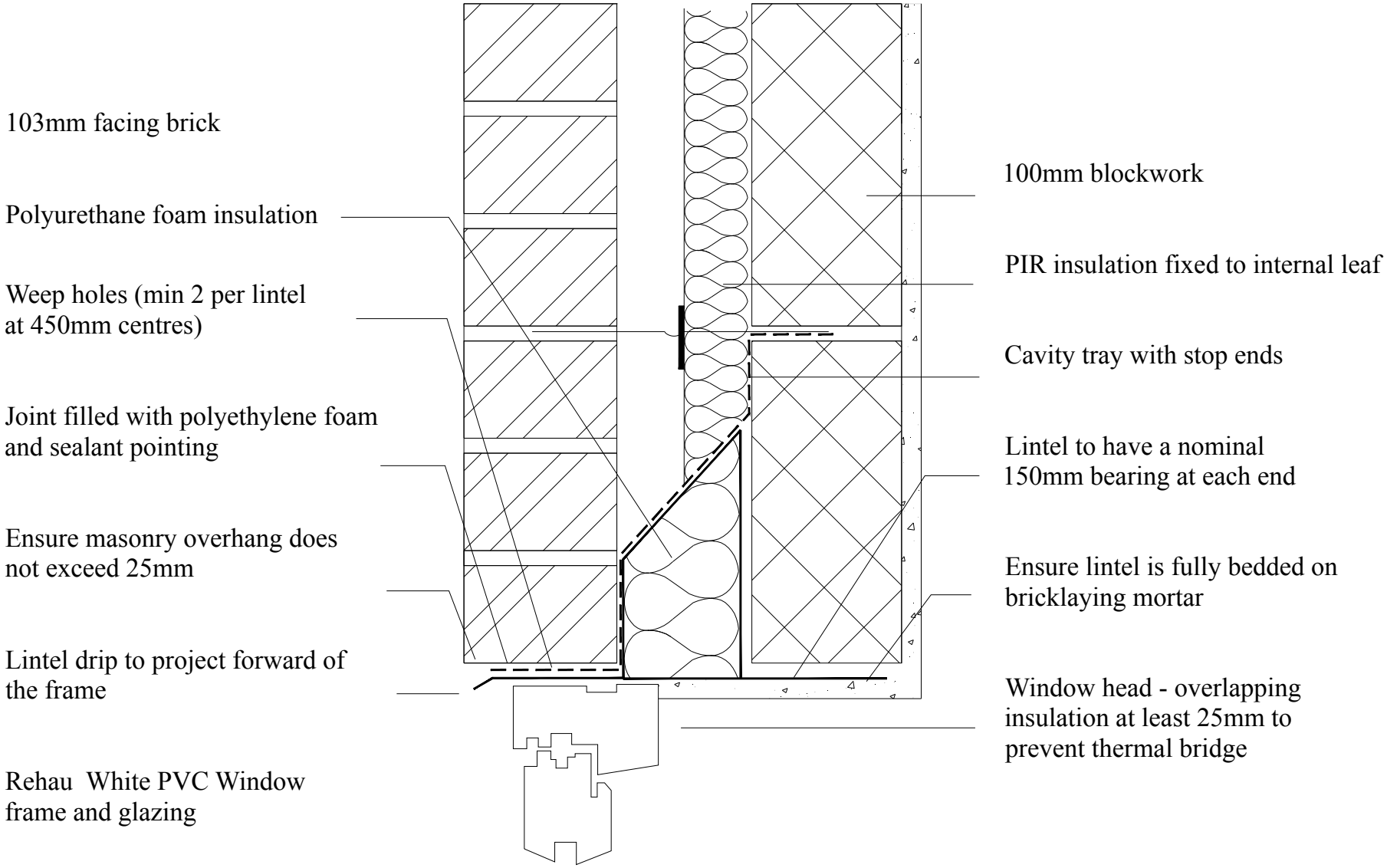
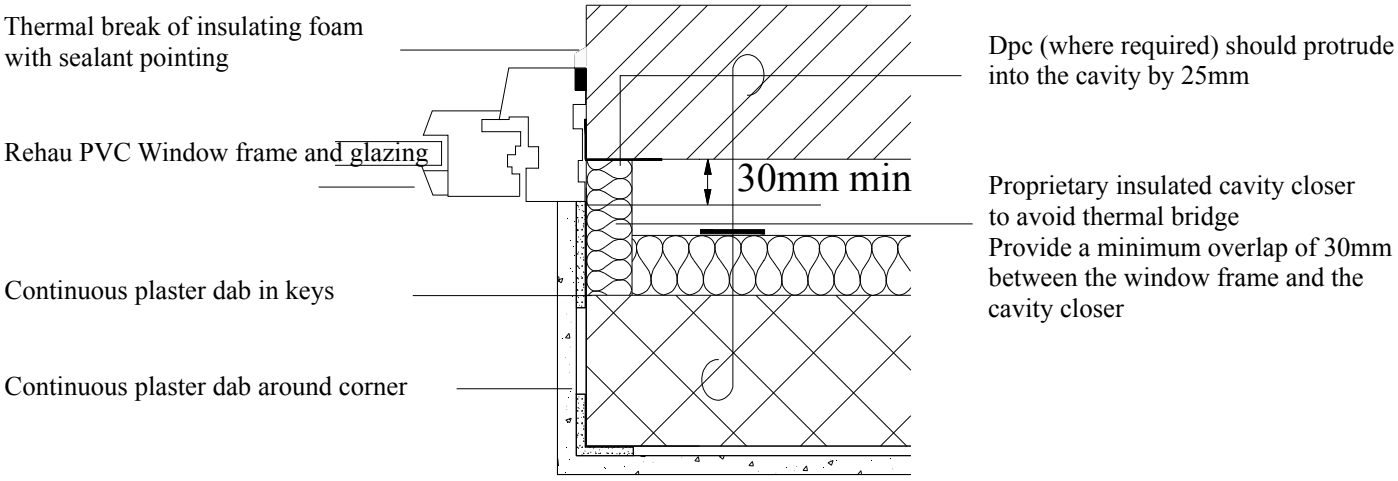
WINDOW REVEAL