SUMMARY FAN DATA SHEET

Nuaire, Western Industrial Estate, Caerphilly, CF83 1NA, United Kingdom. email:info@nuaire.co.uk
UK Commercial enquiries T:029 2085 8200 UK Residential enquiries T:029 2085 8500 International enquiries T:+44.29 2085 8497

Whilst the information given on this data sheet is fan specific, it is in summary and reference to the product selection catalogue and installation & maintenance documents is recommended.

This data sheet produced on 04 Feb 2020 16:25 using software version 4.3.3410.0

Technical Data

MRXBOX-ECO - Wall Mounted Multi Room Xbox

Fan Code:	**MRXBOX-ECO2-OH**
Installation Manual Links:	671795
Required duty:	21 l/s at 38 Pa
Actual duty:	58.436 l/s at 292 Pa
Actual at required flow:	21 l/s at 625 Pa
When speed controlled to required duty (35.94%):	
Motor Input Power:	**0.007 kW**
Specific Fan Power:	**0.3 W/(l/s)**
Velocity at required duty:	1.711 m/s
At full speed:	
Motor Input Power:	0.155 kW
Specific Fan Power:	2.6 W/(l/s)
Nominal Fan Speed:	3,750 RPM
Electrical Supply:	230V 1 Phase 50 Hz
Motor Current (flc):	1.2 A
Max. operating temp:	40°C
Weight:	20 kg

Starting currents are nominal.

Sound Data

Acoustic perfomance to ISO 13347 and AMCA 300.

Noise calculated speed controlled to required duty (35.94%)

Sound Power Levels re 1 pWatts (Hz):

Hz	63	125	250	500	1k	2k	4k	8k	dBA
Breakout	39	41	39	36	28	21	<16	<16	18
Open Inlet (Intake & Extract)	38	36	42	35	29	23	<16	<16	
Open Outlet (Supply & Exhaust)	41	47	47	49	43	40	26	<16	

dBA is hemi-spherical at 3 metres. For spherical deduct 3 dBA.

Please note that the noise data stated on this data sheet for the unit and/or silencer is tested in accordance with UK, European and International industry laboratory standards. However onsite conditions may vary and we would recommend that this information is verified by an acoustic specialist in order to ensure its suitability for the intended application.

Specification

The unit shall be fully insulated providing excellent thermal and acoustic characteristics and shall be complete with a multi plate counter flow high efficiency heat exchanger block, with a thermal efficiency of up to 95%. The heat exchanger shall be protected by filters on fresh air inlet and system extract. The heat exchanger and filters shall be accessible via the front access panel, enabling quick and easy maintenance.

The unit shall have low energy, high efficiency EC fan/motor assemblies with sealed for life bearings, the impellers shall be backward curved centrifugal type. The motors shall be suitable for an ambient temperature of 40°C.

The unit shall be supplied complete with a condensate drip tray and 21.5mm drain connection.

The unit shall be suitable for 125mm circular ducting.

The breakout noise level and power requirements shall be as detailed by the unit manufacturer and in accordance with the ventilation equipment schedule.

The unit shall be offered with a five year warranty. The product warranty applies to the UK mainland and in accordance with Clause 14 of our Conditions of Sale. Customers purchasing from outside of the UK should contact Nuaire International Sales office for further details.

Performance Chart

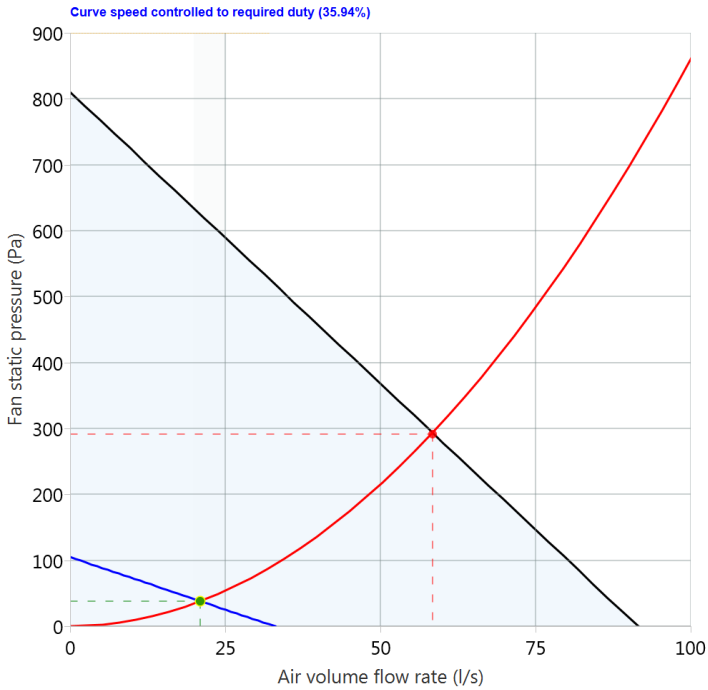

Selected Ancillaries

1 x MVHR-DRAIN	Inline Condensate Drain
1 x SRDI125	Semi Rigid Acoustic Duct 125mm dia x 3M
2 x NTD-204-PL	Insulated 204x60mm Plenum
31 x NTD-204-INS	204x60 internal rectangular duct connector
2 x NTD-125-INS	125 dia internal round duct connector
6 x PVC541WH	System 204x60mm Elbow Bend with 150mm Spigot
2 x PVC905WH-KIT	System 220x90mm Double Airbrick Grilles
1 x FW204X60T	Fire Wrap 204mm x 60mm
5 x NTD-204-90H	Insulated 204x60mm 90 Horizontal Bend
3 x PVC550WH	Horizontal 90° Bend (White)
4 x PVC575WH	Vertical 45° Bend 204x60 (White)
2 x PVC582WH	T-Piece 204x60mm
2 x Q-AIRE-EV125F	Extract Valve with Filter
2 x Q-AIRE-V125	Supply and Extract Valve
7 x D3-2000	2M Length of Flat Channel 204x60mm
3 x PVC520WH	Flat Channel Connector (White)
18 x NTD-204-1M	Insulated 204x60mm 1m Pipe
1 x GALVSEAL	Galvanised metal duct sealant
1 x FLD125	Flex Ducting 125mm dia x 5M
2 x PVCBAND	PVC strap banding 10M roll
2 x PVC50TP45	Duct Sealant
2 x PVCDSEAL	Aluminium Duct Tape 45M
1 x PVCFSEAL	Intumescent Duct Sealant

NTD-125-INS - 125 dia internal round duct connector

Weight: 0.3 kg

GALVSEAL - Galvanised metal duct sealant

Weight: 1.0 kg

SUMMARY FAN DATA SHEET

Nuaire, Western Industrial Estate, Caerphilly, CF83 1NA, United Kingdom. email:info@nuaire.co.uk
UK Commercial enquiries T:029 2085 8200 UK Residential enquiries T:029 2085 8500 International enquiries T:+44.29 2085 8497
Whilst the information given on this data sheet is fan specific, it is in summary and reference to the product selection catalogue and installation & maintenance documents is recommended.
This data sheet produced on 04 Feb 2020 16:25 using software version 4.3.3410.0

Fan Dimensions

SPIGOT CONFIGURATION SHOWN IS VALID FOR THE OPPOSITE HANDED UNIT ONLY. STANDARD HANDED UNIT IS ALSO AVAILABLE UPON REQUEST.

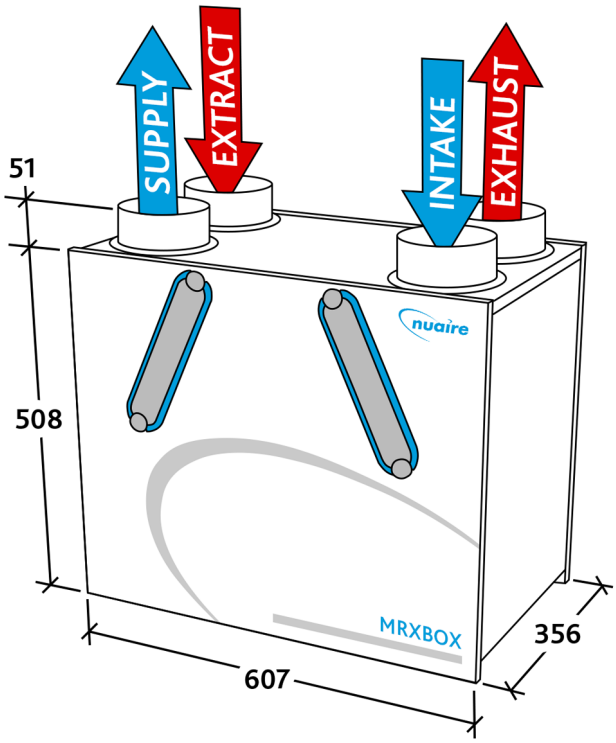

Length:	Width:	Height:
356	607	507

Spigot size: 125
Duct size: 125
Drawing is for dimensional purposes only. Dimensions in mm

SAP Appendix Q Test Results

Application	Specific Fan Power (W/l/s)	Heat Exchange Efficiency %
Kitchen + 1 wet room	0.47	89%
Kitchen + 2 wet rooms	0.54	88%
Kitchen + 3 wet rooms	0.66	87%
Kitchen + 4 wet rooms	0.85	87%
Kitchen + 5 wet rooms	1.05	86%
Kitchen + 6 wet rooms	1.34	86%

SUMMARY FAN DATA SHEET

Nuaire, Western Industrial Estate, Caerphilly, CF83 1NA, United Kingdom. email:info@nuaire.co.uk
UK Commercial enquiries T:029 2085 8200 UK Residential enquiries T:029 2085 8500 International enquiries T:+44.29 2085 8497
Whilst the information given on this data sheet is fan specific, it is in summary and reference to the product selection catalogue and installation & maintenance documents is recommended.
This data sheet produced on 04 Feb 2020 16:25 using software version 4.3.3410.0

Attached documents

MRXBOX-ECO2 - Mechanical Ventilation Units with Heat Recovery for Wall Mounting - Installation and Maintenance - Installation and Maintenance (Leaflet Number 671795)

MRXBOX-ECO2 (Standard Unit)
MRXBOX-ECO2-OH (Opposite hand Unit)
MRXBOXAB-ECO2 (Standard Unit)
MRXBOXAB-ECO2-OH (Opposite hand Unit)

Mechanical Ventilation Units with Heat Recovery for Wall Mounting

Installation and Maintenance

The EMC Directive 2014/30/EU
The Low Voltage Directive 2014/35/EU

1.0 Introduction

The ECO2 wall mounted range of units is designed to provide mechanical supply and extract ventilation with heat recovery.

The unit is fitted with two independent fans. Each fan has full speed control for background and boost ventilation rates. To recover heat from the extract air the heat exchanger block is utilised. The heat exchanger can recover up to 95% of the normally wasted heat.

Figure 1. Airflow through unit (Standard unit).

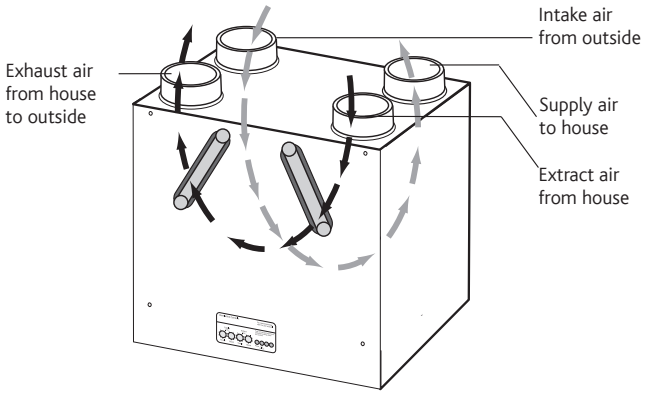

Figure 2. Airflow through OH unit (Opposite hand unit).

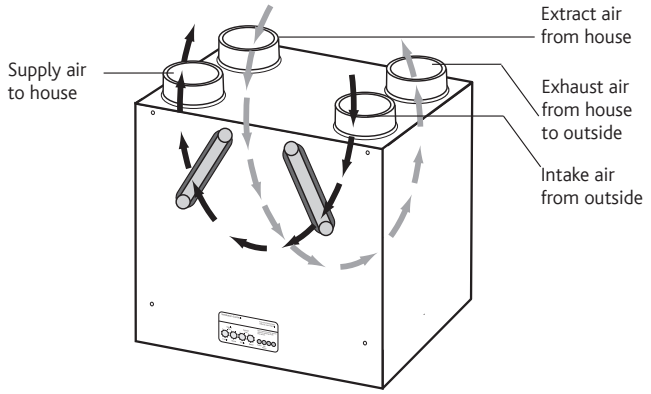

2.0 Installation

Installation must be carried out by competent personnel in accordance with the appropriate authority and conforming to all statutory governing regulations. All mains wiring must be in accordance with the current I.E.E. Regulations, or the appropriate standards. Ensure that the mains supply (Voltage, Frequency and Phase) complies with the rating label.

Please note a clear working space is required around the installed unit to allow the cover to be removed and provide sufficient access for maintenance such as filter change.

Please allow a minimum of 350mm in front of the unit.

The fan must be installed indoors, on a suitable wall away from direct sources of frost, heat and water spray or moisture generation. For a vibration-free result the unit must be mounted to a solid wall.

IMPORTANT

The unit must remain switched on at all times to maintain ventilation within the dwelling. Turning the unit off will cause long term damage to the unit and building fabric.

This appliance is not intended for use by persons (including children) with reduced physical, sensory or mental capabilities, or lack of experience and knowledge, unless they have been given supervision or instruction concerning the use of the appliance by a person for their safety. Children should be supervised so that they do not play with the appliance.

2.1 Wall Mounting the MVHR Unit

The unit is designed for wall mounting, only on a solid wall. A gypsum block or stud/plasterboard wall will not suffice.

1. One part of the mounting bracket (supplied) should be offered up to the wall, ensuring it's located horizontally. Mark the fixing points through the pre drilled holes in the bracket and install with screws (by others), whilst ensuring the interlock side is at the top (fig. 3).

Figure 3. Fixing the mounting bracket to the wall.

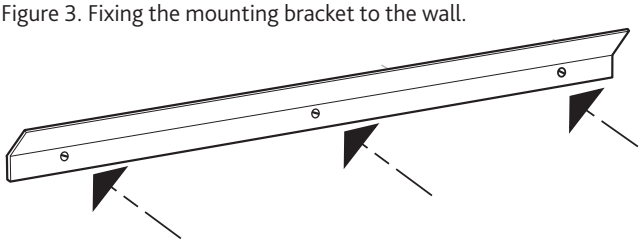

2. Install the unit on the wall by ensuring the bracket fixed to the rear of the unit interlocks over the wall mounted bracket (fig. 4).

Figure 4. Mounting the unit on the wall mounted bracket.

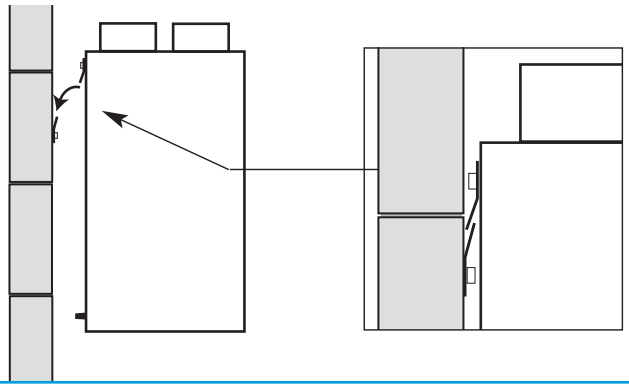

Note: Care must be taken to ensure the unit is installed true in all 3 dimensions. Failure to do so may result in overflow from the internal condensation drip tray.

(See overleaf for mounting option details, on walls or in the loft space).

2.2 Option 1: Wall Mounting

The MVHR unit fixed to a solid wall construction using the mounting bracket provided.

Figure 5. Typical example of a cupboard mounted unit (Standard unit) fixed to a block work wall.

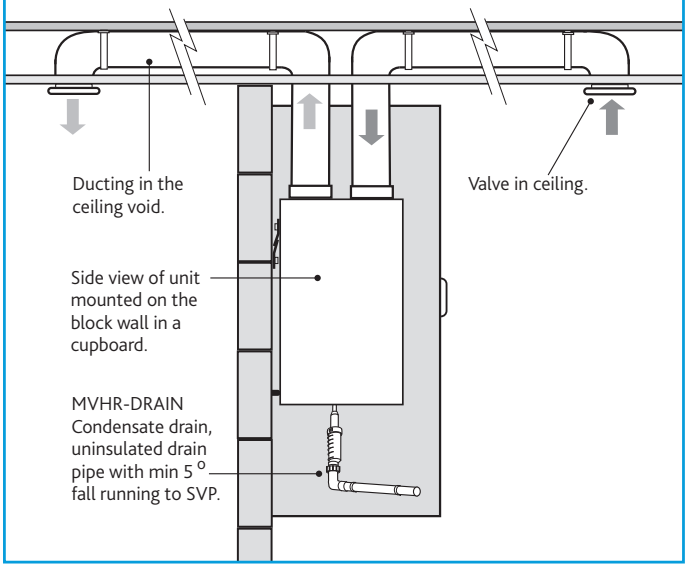

2.3 Option 2: Wall Mounting

If it is not practical to use a solid wall, the MVHR unit should be fixed to a stud partition with a 25mm minimum thickness MDF panel solidly fixed behind the plasterboard.

If fixing to a stud wall the MDF panel should extend, width wise, over a minimum of 3 vertical studs with centres of no more than 400mm. Add additional vertical supports if necessary.

Height wise, ideally, the MDF panel should extend from floor to ceiling but as a minimum should be a least 2m high.

Fix the mounting bracket to the wall (as fig 3) and use the wall mounted bracket to mount the unit on (as shown in fig 4).

Figure 6. Typical example of a cupboard mounted unit (Standard unit) fixed to a stud partition with the MDF panel fixed behind the plaster-board.

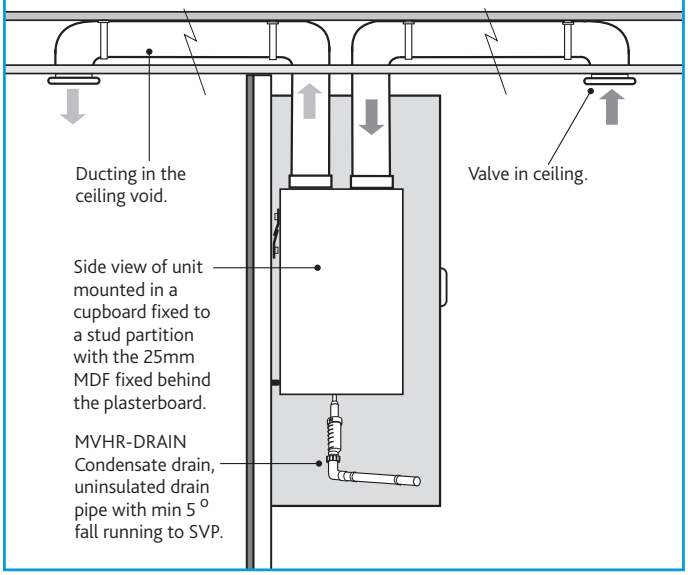

2.4 Option 1: Loft Space Mounting

The MVHR unit should be positioned on a tank stand using the Nuaire Anti-vibration tray assembly discarding the angle brackets.

Nuaire Anti-vibration tray assembly is to be purchased separately (Part No. MRXBOX-AV2).

Figure 7. Typical example of tray assembly used for mounting in a loft space.

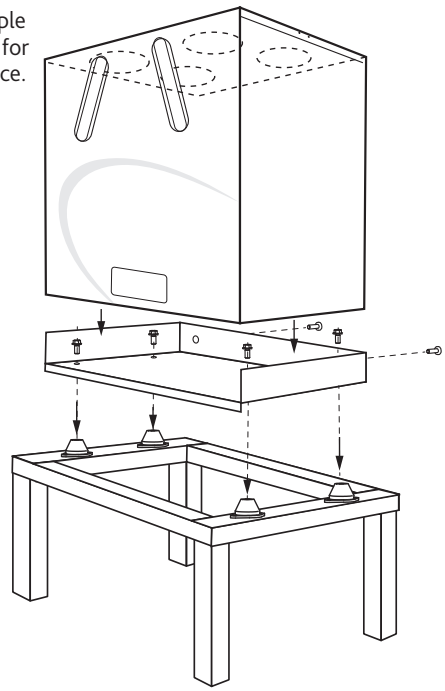

2.5 Option 2: Loft Space Mounting

The MVHR unit should be positioned on a 25mm minimum thickness MDF panel that is vertically fixed across the roof trusses to form a solid false wall.

Add additional vertical supports if necessary. Use the Nuaire Anti-vibration tray assembly including the angle brackets, to be purchased separately (Part No. MRXBOX-AV2).

Figure 8. Typical example of tray assembly used for mounting in a loft space.

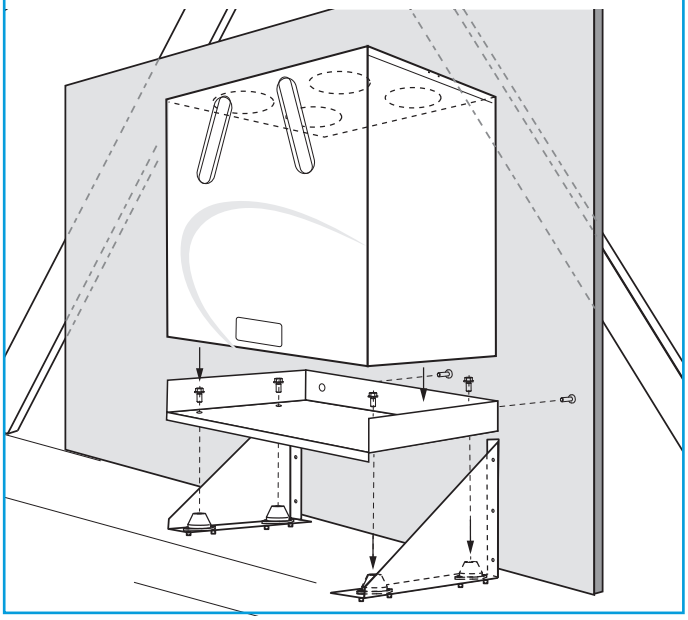

2.6 Condensate Drain

1. The condensate must be discharged under a water level in a U-trap drainpipe or an alternative drain method which acts as an airlock.
2. This condensate discharge connection is suitable for 21.5mm dia. overflow pipe. Solvent cement should be used to make the joint.
3. If using a U-trap please ensure the U-trap has been filled to a suitable level of water to avoid any air locks.
4. If the condensation pipe is fitted in an unheated space the pipe should be in insulated to prevent freezing.

Nuaire recommend MVHR-DRAIN be used as the primary condensate take-off. (see figure 10 and 11).

Figure 9. Wet option: Condensate pipe connection to unit and a typical example of a "U" trap drainpipe **(Standard configuration only).**

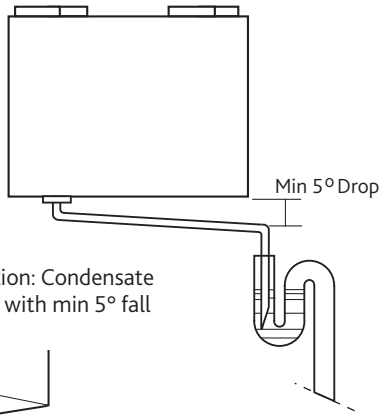

Figure 10. MVHR-DRAIN option: Condensate drain, uninsulated drain pipe with min 5° fall running to SVP.

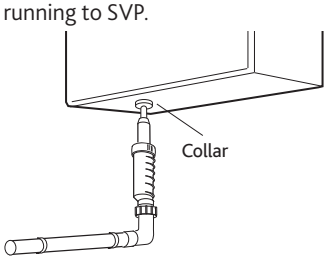

Figure 11. IMPORTANT: When using a "T" Piece to connect the CONTRAP drainage and the MVHR drain pipework the MVHR drain must always be fitted before the "T" Piece to prevent condensate from feeding back into the MVHR system.

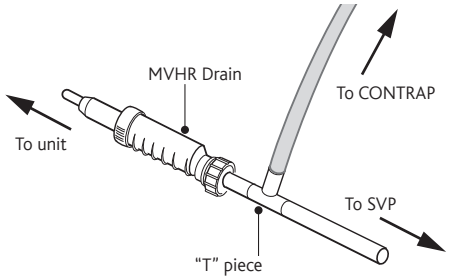

2.7 Extract/Input Areas

The unit is designed to extract air from all wet rooms e.g. bathroom, kitchen, en-suite, utility room (with sink). WC's do not need to be ventilated if openable windows are fitted.

Supply air should be to all habitable rooms e.g. bedrooms and lounge. Extract / input grilles should be adjustable valve types (not supplied). External grilles are to have a minimum free area of 12,250 sq. mm.

2.8 Ducting

Before commencing ducting installation reference should be made to building regulations document "Domestic ventilation compliance guide". This document supports ADF2010 and details installation, testing and commissioning of all ventilation systems.

It is recommended that rigid ducting be used at all times. Flexible ducting has a very high resistance and it is impossible to calculate how much resistance will be on a system if used.

If used the flexible ducting must be kept to a minimum and should always be pulled taut. A maximum of 300mm should be used on each leg.

To prevent condensation on the outside of the outside air inlet duct and the air outlet duct from the unit, these ducts should be insulated.

Ducting must be installed in such a way that resistance to airflow is minimised. Bends should be kept to a minimum.

A minimum distance of 300mm between the appliance and any bends in ductwork is recommended.

Ideally 150mm diameter or 204 x 60mm rectangular ducting should be used (refer to dwelling design drawing, Figure 13 and Figure 14 on page 5 for further information).

Ducting joints must be sealed with silicone type sealant and shall be adequately and reliably fixed to the appliance.

2.9 Ventilation Flow Rates

Table 1. ADF 2010 - Extract ventilation rates.

Room	Min high rate	Min low rate
Kitchen	13 l/s	Total extract rate should be at least the whole dwelling ventilation rate given in table 2.
Utility Room	8 l/s	
Bathroom	8 l/s	
Sanitary Accommodation	6 l/s	

Table 2. Whole dwelling ventilation rates.

	Number of bedrooms in dwelling				
	1	2	3	4	5
Whole dwelling ventilation rate (l/s) [1,2]	13	17	21	25	29

Notes:

1. In addition, the minimum ventilation rate should be no less than 0.3 l/s per m2 of internal floor area. (This includes all floors, e.g. for a two-story building add the ground and first floor areas).

2. This is based on two occupants in the main bedroom and a single occupant in all other bedrooms. This should be used as the default value. If a greater level of occupancy is expected add 4 l/s per occupant.

IMPORTANT

Any air intake terminal MUST be installed in accordance with the appropriate regulation.

As a guide, the BS5440 series of British Standards deals with this issue and currently states that an air intake must be at a minimum distance of 300mm from a gas boiler balanced flue.

Installers are advised to be aware of the requirements of this standard when installing 'through the wall' supply air ducting.

2.10 ADF 2010 Ventilation Calculations Design of MVHR Systems

The MVHR system has been sized for the winter period. Additional ventilation may be required during the warmer months and it has been assumed that the provisions for purge ventilation (e.g. openable windows) could be used.

Step 1: For any design air permeability, determine the whole dwelling ventilation supply rate from **Table 2.**

As an alternative where the design air permeability is intended to be more than (>) 5m3/(h.m2) 50 Pa, allow for infiltration for all dwelling types by subtracting from the whole dwelling ventilation supply rate **from Table 2;** 0.04 x gross internal volume of the dwelling heated space (m3).

Step 2: Calculate the whole dwelling extract ventilation rate by summing the individual room rates for 'minimum high rate' **from Table 1.**

(For sanitary accommodation only, as an alternative, the purge ventilation provisions given in ADF 2010 can be used where security is not an issue. In this case 'minimum high extract rate' for the sanitary accommodation should be omitted from the step 2 calculation).

Step 3: The required airflow rates are as follows:

- The maximum whole dwelling extract ventilation rate (e.g. boost) should be at least the greater of step 1 and step 2. Note that the maximum individual room extract rate should be at least those given in **table 1.**
- The minimum air supply rate should be at least the whole building ventilation rate found in step 1.

For Scotland refer to BRE Digest 398.

For further information refer to "Domestic Ventilation Compliance Guide" www.planningportal.gov.uk/buildingregulations/approved documents/partl/compliance

Pre Commissioning MRXBOX95 MVHR Units

MRXBOX95 units are designed to ventilate the whole dwelling and must not be used during site construction or the clean-up period. Cement and plaster dust can be abrasive and can affect fan performance and reliability. Please ensure that the filters are checked prior to commissioning to ensure there is no build-up of dust or debris.

While the property is drying out, very high moisture levels are likely to occur. Therefore it is advisable that if the installation and building works are complete the unit is left running. If the building works are not complete please close the air valves or cover up the air valves to prevent condensation forming in the ductwork and the MRXBOX95 unit due to natural migration of warm air.

3.0 Dimensions (mm)

Figure 12. Unit dimensions.

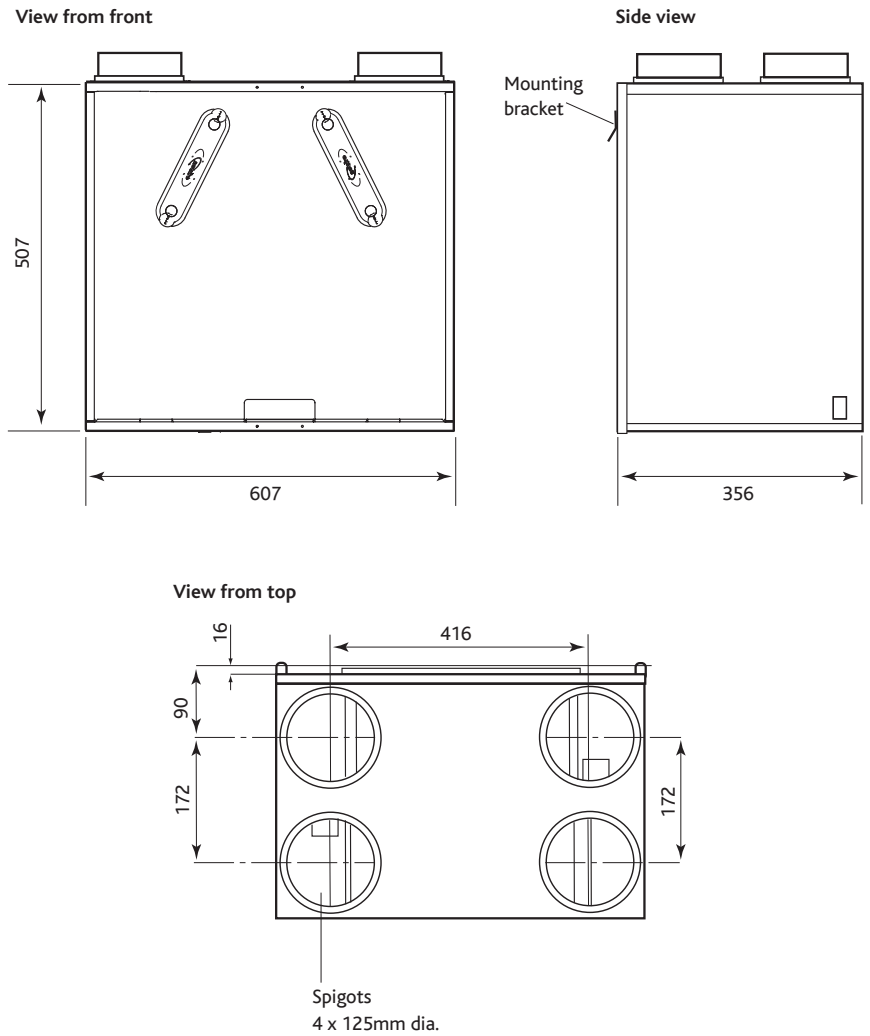

4.0 Ducting Arrangements - Standard Configuration

Figure 13. Typical ducted arrangement for a wall mounted unit using circular ducting.

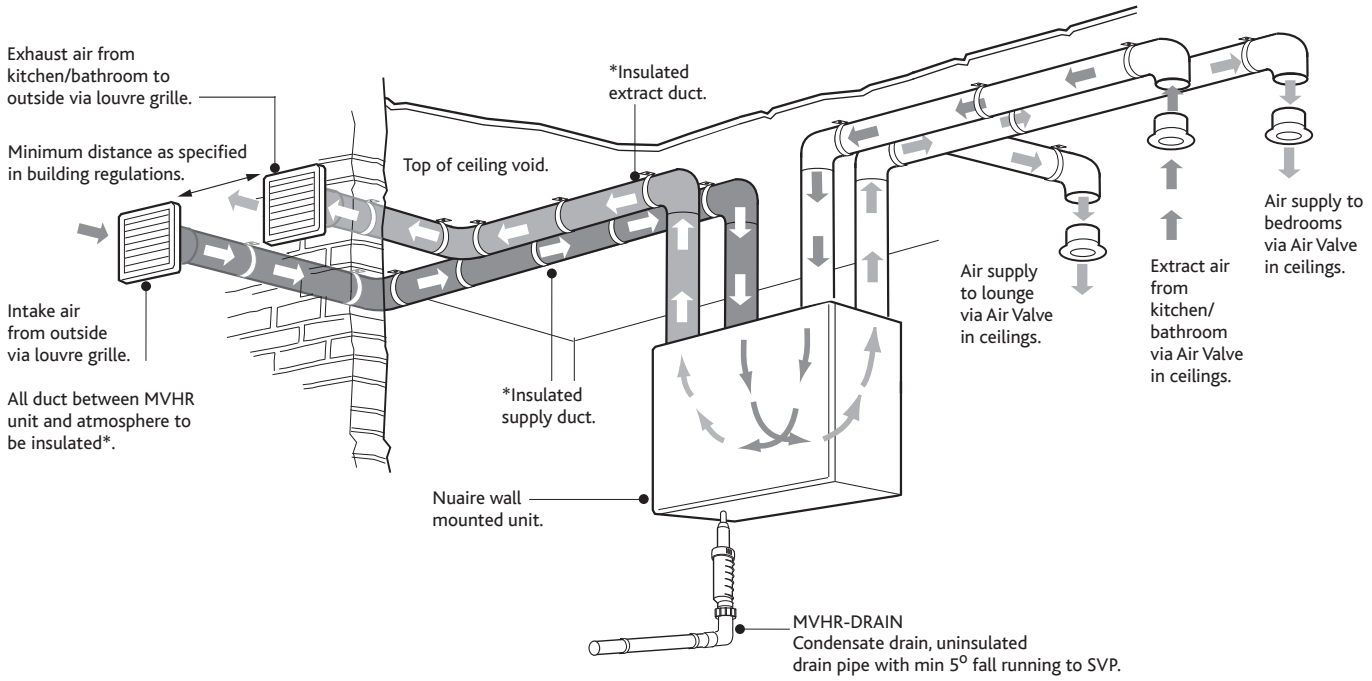

Figure 14. Typical ducted arrangement for a wall mounted unit using circular ducting.

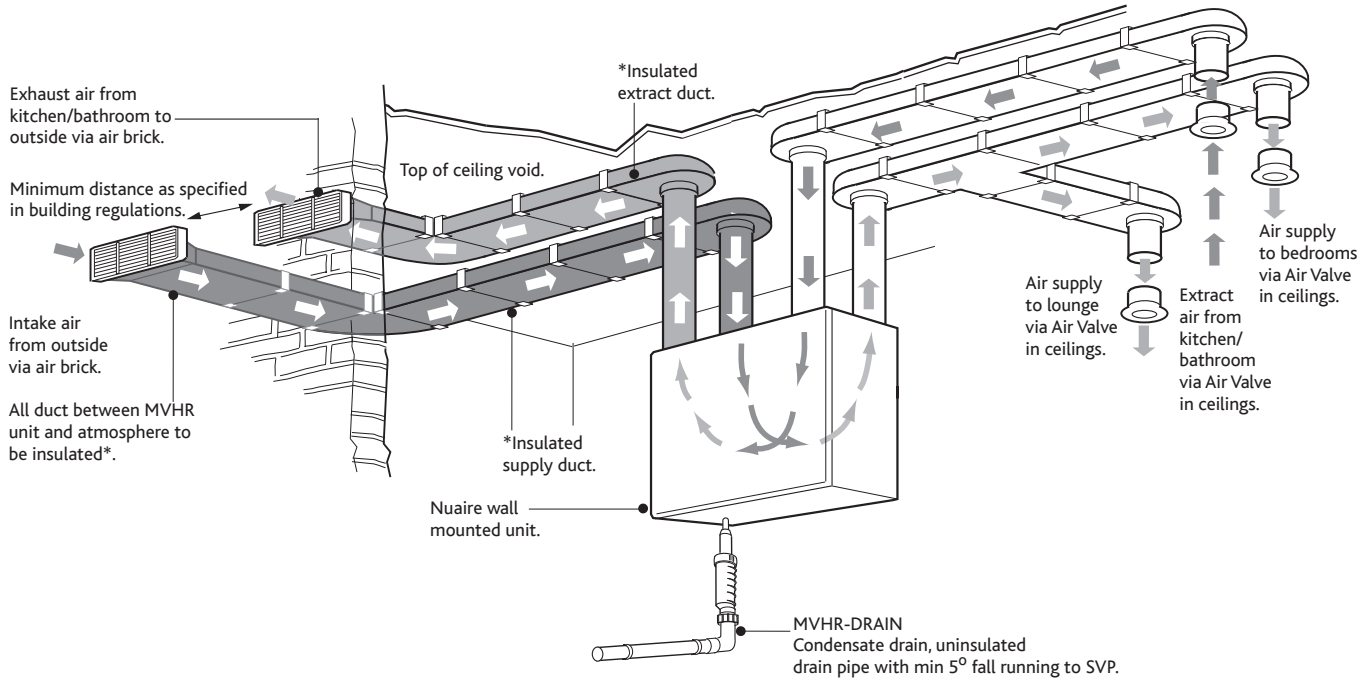

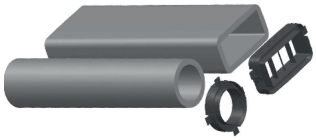

ALSO FROM NUAIRE -

New ductmaster range of thermal ducting, an all-in-one insulated ducting system (see installation document 671780)

5.0 Electrical Connection

IMPORTANT

For good EMC engineering practice, any sensor cables or switched live cables should not be placed within 50mm of other cables or on the same metal cable tray as other cables.

Please note: the electrical connection of the unit must be carried out by a qualified electrician.

The unit is supplied with a flexible cord for connection to the mains supply.

Electrical details:-

Voltage: 240V 1ph 50Hz

Consumption: 1.2 Amp

Fuse rating: 3 Amp

NOTE This unit must be earthed.

The cable from the mains power supply should be connected to a fixed wiring installation, via a fused isolator, in accordance with current IEE wiring regulations.

Figure 15. PCB Details

Note: Wiring is for reference purposes only as the connections in fig. 15 are factory fitted. The unit is pre-wired with a 2 metre fly lead.

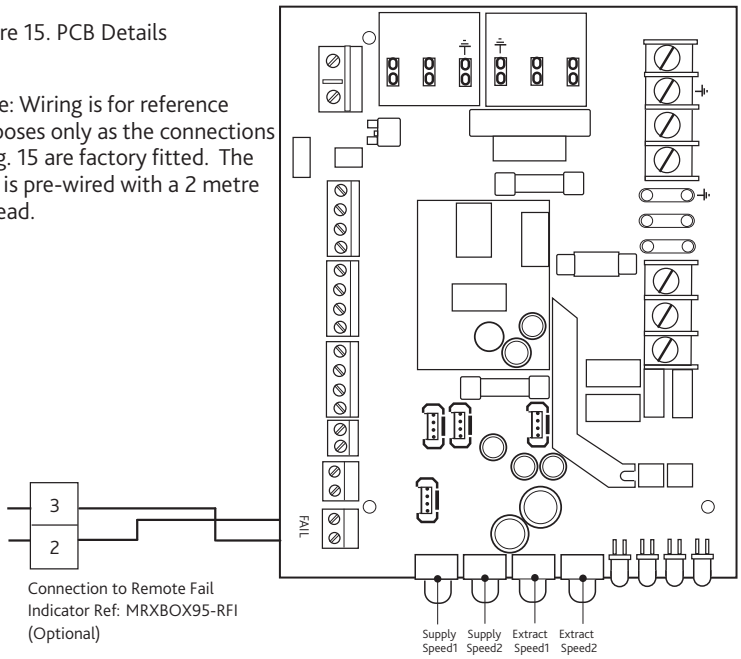

Figure 16. View of the base on the unit, showing the position of the connector for Ecosmart devices located next to cable entry.

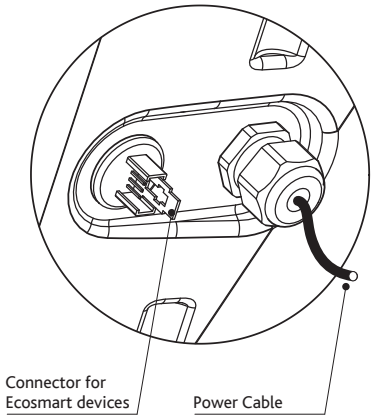

If more than one Ecosmart sensor is required please use MRXBOX-JB and refer to leaflet No. 671700 for installation instructions.

Unit serving kitchen and bathroom

Figure 17.

Disconnection from the supply mains must be incorporated within the fixed wiring in accordance with the wiring regulations and shall have a minimum contact separation of 3mm.

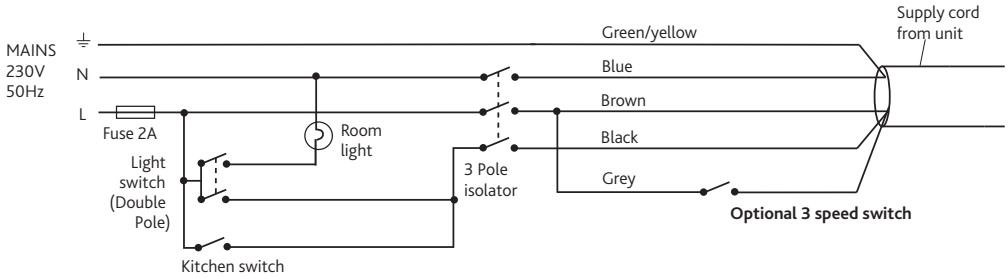

Unit serving kitchen and two bathrooms

Figure 18.

Disconnection from the supply mains must be incorporated within the fixed wiring in accordance with the wiring regulations and shall have a minimum contact separation of 3mm.

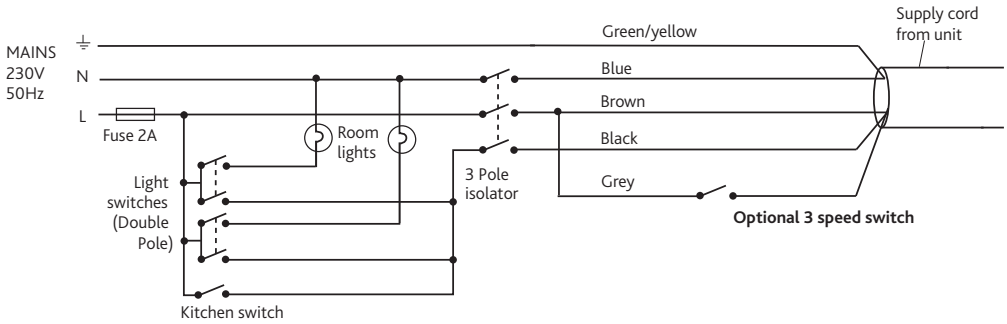

5.1 Optional Controls - For further information regarding optional controls, contact Nuaire on 02920 858 400.

6.0 Commissioning

IMPORTANT

The filters fitted inside the unit are protected with a plastic film. Prior to commissioning remove the covers (figs. 15 & 16), take off the film and replace.

1. For the required air flow rates please refer to the design specification for the property, follow 2.4, or refer to building regulations ADF 2010.
2. The unit is supplied with independent control for both normal and boost airflows (see fig. 19).
3. Correct commissioning is essential to ensure the ventilation air flow rates are met. It also ensures the unit is not over ventilating and causing excessive power consumption.
4. Commissioning should be carried out in accordance with building regulations document "Domestic ventilation compliance guide". **www.planningportal.gov.uk/building regulations/approved documents/partf/associated**
   A calibrated moving vane anemometer and hood will be required to carry out commissioning.
5. Adjustment valves should be locked in place to prevent further adjustment.
6. Once commissioned the home owner / tenant should be informed that the unit should not be adjusted as it will have a detrimental effect on the indoor air quality and could result in condensation and mould growth. The clear panel covering the control has an adhesive panel which should be exposed and sealed post commissioning to prevent tampering.
7. Speed 1 is limited to never exceed speed 2, when commissioning speed 2 should always be set first.

Figure 19. Detail of unit control on front panel **(standard configuration only).**

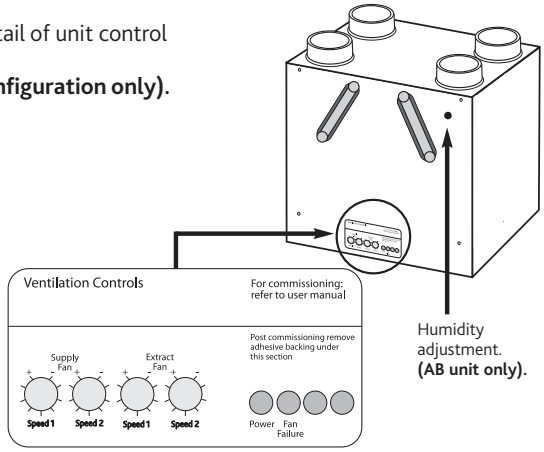

6.1 Speed 3

The unit has the ability to override both speed 1 and speed 2 to operate the fan to maximum airflow. See wiring diagram for details of operating this facility.

6.2 Humidity adjustment (AB unit only).

This product contains an internal humidity sensor fitted into the air-flow extracting from the wet rooms. When the unit senses that the humidity exceeds the set point the unit will boost to that set by the commissioned boost speed. The set point can be found on the front of the unit (see fig. 19) and is at its least sensitive when turned fully clockwise. Note that the sensor is measuring humidity from all the wet rooms at the same time and should not be relied on to solely boost the unit. Additional switch should be used local to the wet rooms (see wiring diagrams).

7.0 Status Indication

The status of the unit is indicated by a series of LED's on the front cover. The variants are listed below.

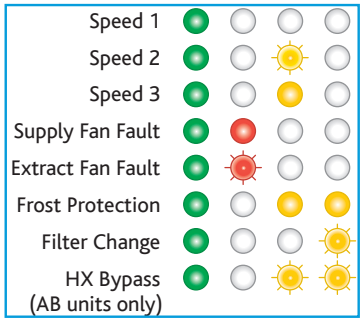

Note: The display on the unit control panel will not indicate when a higher speed setting has been triggered by an external source, such as an ES-PIR2 etc.

8.0 Integral automatic HX bypass (AB units only)

Intake and extract temperatures are monitored at the point the airflows enter the unit, if the range falls within the set parameters the bypass damper is opened automatically to target an indoor comfort temperature all year round.

Note: The extract temperature is an average from all wet rooms. If this exceeds 25°C the unit may go into bypass depending on outside temperatures.

8.1 Thermal Bypass (Non AB models)

In the event of excessive outside temperatures, and to help prevent over-heating, the supply fan will automatically reduce to a trickle speed. Under these circumstances additional ventilation measures may be required e.g. open windows or trickle vents (if fitted).

8.2 Frost Protection

In the event of the intake air temperature at the unit dropping below the predetermined set point (-5° C as standard) the supply fan will reduce to minimum speed, once the temperature rises above the set point the fan will return to its commissioned speed.

Please note this mode will only activate after ten days of continuous run time. If commissioning of the unit is outside of this timeframe please notify the after sales department prior to site visit.

9.0 Maintenance

IMPORTANT

Isolation - Before commencing work make sure that the unit, switched live and Nuaire control are electrically isolated from the mains supply and switched live supply.

Nuaire recommend that filters are inspected every 6 months and replaced every 12 months. A flashing LED (Section 7.0) will indicate that a filter change is required. This indication repeats every 12 months and will turn off automatically after 5 Days.

Remove the filter covers on the front panel of the unit by gripping the two circular tabs either end of the filter covers and pulling away from the unit. The filter can now be extracted by pulling the removal loop on the front edge of the filter. Once the filters have been inspected return or replace them as necessary.

Inspect the heat exchanger every 5 years. Generally check for damage and security of components. Refit cover.

Figure 20. Removing the two filter covers on the front panel of the unit.

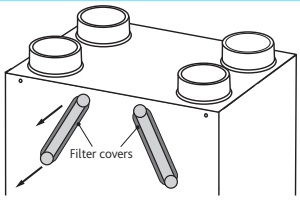

Figure 21. The filters can be removed by pulling on the black tab on the visible end of the filters.

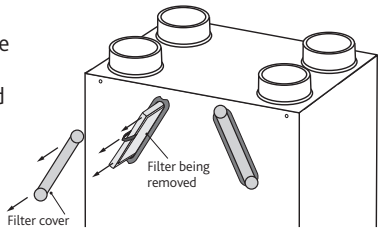

10.0 Replacement of Parts

Should any component need replacing, Nuaire keep extensive stocks for quick delivery. Ensure that the unit is electrically isolated, before carrying out any work.

Note: The supply cable must be replaced by an electrically competent person.

When ordering spare parts, please quote the serial number of the unit and the ARC number of the purchase, if possible. (This information will be available on the fan label).

11.0 Warranty

The 5 year warranty starts from the day of delivery and includes parts and labour for the first year and parts only for the remaining 4 years.

This warranty is void if the equipment is modified without authorisation, is incorrectly applied, misused, disassembled, or not installed, commissioned and maintained in accordance with the details contained in this manual and general good practice.

The product warranty applies to the UK mainland and in accordance with Clause 14 of our Conditions of Sale. Customers purchasing from outside of the UK should contact Nuaire International Sales office for further details.

12.0 After Sales

For technical assistance or further product information, including spare parts and replacement components, please contact the After Sales Department.

Telephone 02920 858 400
aftersales@nuaire.co.uk