BEI | lighting

lighting from the ground up

BEI LIGHTING ELDON MIDI & MINI LED LANTERN

Note: posts at this site will be black, powder coated and galvanised

The new BEI Eldon range is a family of luminaires developed to deliver an innovative and modern lighting system for a range of street lighting applications, with a variety of options which have been developed specifically for street lighting environments. The system offers exceptional optical performance, thermal management, flexibility and efficiency.
Low profile styling, adaptable mounting design and customised optics that allow for maximum column spacing, lighting and uniformity mean that the range delivers the complete street lighting solution.

Wyndham Close, Brackla Industrial Estate, Bridgend CF31 2AN

BEI | lighting

lighting from the ground up

Features

- ☑ Low Cost
- ☑ 4000Lm & 8000Lm
- ☑ NEMA Socket
- ☑ Low maintenance
- ☑ Long life span 100,000hrs
- ☑ Multiple mounting options

ELDON MIDI

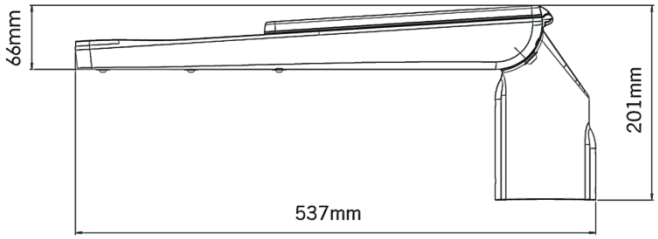

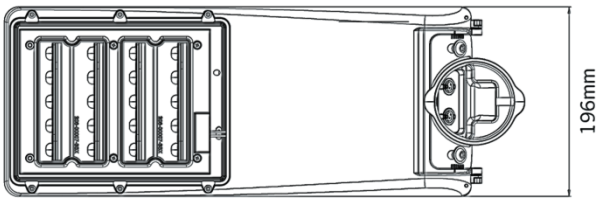

ELDON MINI

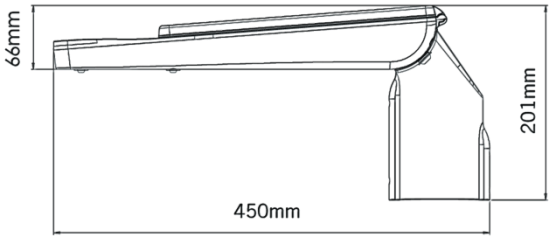

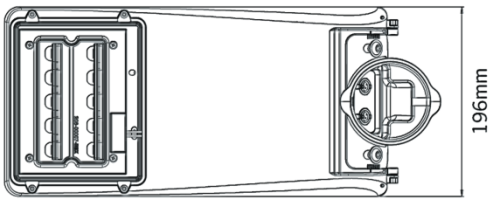

Applications

- ☑ Residential Roads
- ☑ Residential Streets
- ☑ Walk Ways
- ☑ Cycle Paths
- ☑ Amenity Areas

Wyndham Close, Brackla Industrial Estate, Bridgend CF31 2AN

BEI | lighting
lighting from the ground up

Impact rating - IK10

In accordance with EN 62262, IK10 impact protection rating has been achieved. Maximum protection to ensure the projected life of the luminaire is maintained. ***The IK10 rating is achieved via the 4mm/5mm thick tempered glass lens.***

WITH FITTED GLASS COVER

WITHOUT FITTED GLASS COVER

ELDON MIDI

ELDON MINI

Wyndham Close, Brackla Industrial Estate, Bridgend CF31 2AN

BEI | lighting

lighting from the ground up

Specifications			
Product Code		**Eldon Mini**	**Eldon Midi**
Energy Consumption		34w	68w
Lumens		4000Lm	8000Lm
Colour Temp (K)		4000k	
CRI		70	
Optical IP Rating		IP66	
Housing IP Rating		IP66	
Lifetime		100,000 Hours	
Weight		4Kg	5Kg
Windage		Post Top 0.0297m2	Post Top 0.0354m2
		Side Entry 0.0350m2	Side Entry 0.0407m2
Mounting	**Post Top**	76mm	
	Side Entry	60mm/42mm/34mm	

Accessibility
Cast aluminium (LM6) cover hinging upwards to allow ease of access during installation and maintenance.

Robust
Protective vent gland that manages the internal pressure supporting long service life, increasing reliability, and preventing deformations that could cause component failure.

LED Driver
Thermally managed LED drivers with a range of control and drive current options.

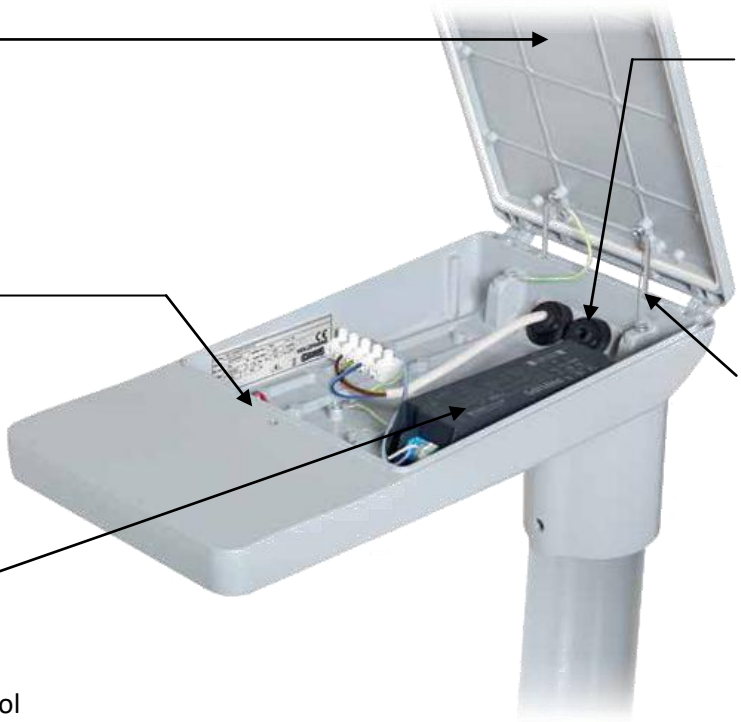

Dual Cable Entry
Dual glanded cable entry for controls and powers. Allows flexibility during installation whilst maintaining the integrity of the luminaire housing.

Safety
Safety strap supplied as standard on all post top mounted versions to ensure cover does not 'fold back' during installation/maintenance. Stay arm, available as an option, for easy maintenance on-site.

☎ 01656 645414

🖷 01656 669231

sales@beilighting.com

www.beilighting.com

Wyndham Close, Brackla Industrial Estate, Bridgend CF31 2AN