JOB NAME	RIVERMEAD LEISURE COMPLEX
JOB No.	6265
	DISCHARGE OF PLANNING CONDITIONS NO. 19 – PLANNING REFERENCE - 201734
	July 2021

REPORT

PDF processed with CutePDF evaluation edition www.CutePDF.com

Revision	Date	Issue Status	Prepared by	Checked by
A	JULY '21	INFORMATION	SMGM	LF
B	JULY '21	INFORMATION	SMGM	LF

This report has been prepared for the sole benefit, use and information of the Client, for the purposes described and the liability of Furness Partnership Ltd. in respect of the information contained within the report will not extend to any third party.

1 Contents

2 Introduction....1
3 Site Details....2
3.1 Site Location and proposals....2
3.2 Storm Drainage....2
3.3 Storage Requirements....2
3.4 SUDS Maintenance....3
3.5 Conclusions....3
4 Appendices....3

2 Introduction

This report provides clarification of the Storm Water Drainage Strategy for Rivermead Leisure Centre, Reading. The

The condition no. 19 of the planning approval – 201734 are as follows –

19. No development shall commence until a Sustainable Drainage Strategy and associated detailed design, management, and maintenance plan of surface water drainage for the site using SuDS methods has been submitted to and approved in writing by the Local Planning Authority. Thereafter the approved sustainable drainage scheme shall be completed in accordance with the scheme's timing/phasing arrangements for the site to be approved under condition 5. REASON: These details are required due to insufficient information being contained within this submission and in order to reduce the risk of flooding onsite or elsewhere in accordance with Policy EN18 of the Reading Borough Local Plan 2019.

The information presented in this report is to allow the discharge of the conditions, at this time.

3 Site Details

3.1 Site Location and proposals

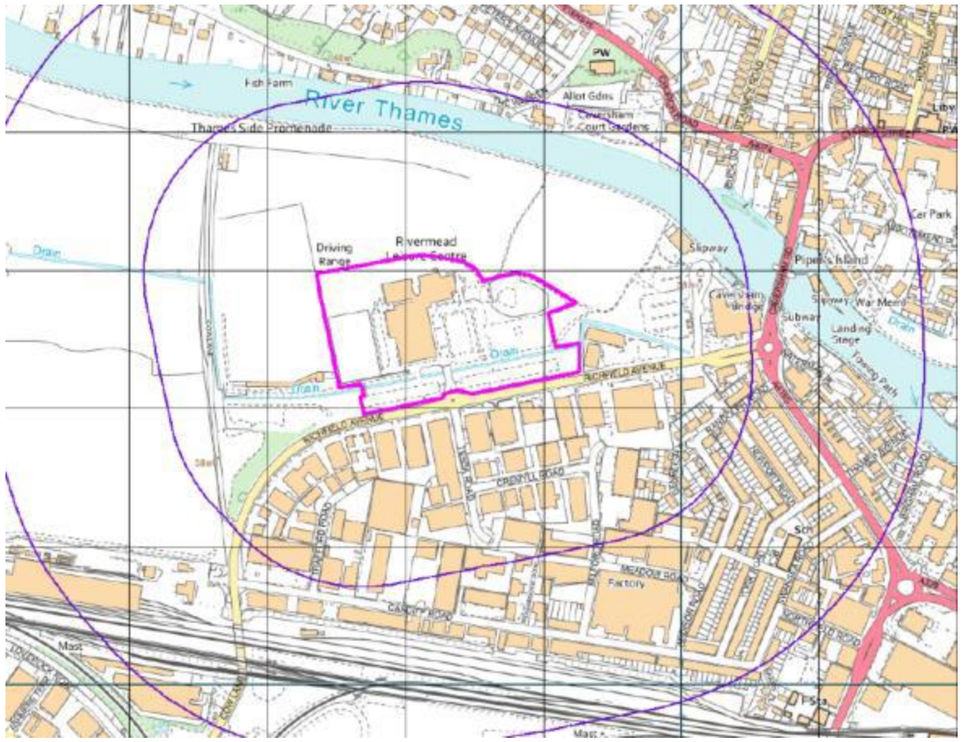

Figure 1 -Rivermead Leisure Centre development location

The site is situated within Richfield Avenue in Reading and is bounded by open land and the River Thames to the North, commercial land to the East, industrial land to the South and open land to the West. The proposed development will involve the construction of a new two-storey leisure centre constructed in the area of the existing carpark. The existing complex will be in operation whilst construction of the new building is taking place and will be demolished once the new facility is operational. A mixture of hard and soft landscaping areas will form the make-up of the new development which will include an access road, pavements, parking and planters as well as recreational grounds.

3.2 Storm Drainage

The existing site is a Brownfield site and as outlined in the Planning Submission Rivermead Leisure Centre – Flood Risk Assessment November 2020 the stormwater will be reduced to 50% of existing runoff rates in accordance with Reading Borough Council Policy EN 18. Reading Borough Council's policy EN 18 Flooding and Sustainable Drainage Systems which states that, *"Runoff rates should aim to reflect greenfield conditions and, in any case, must be no greater than the existing conditions of the site."*

The existing runoff rate for the redeveloped area of the site post development has been calculated as 249.9l/s. The overall developable area is reduced with the new Lesiure Centre and the runoff rate for the redeveloped site before mitigation measures would be 342 l/s. However, the betterment of 50% will be provided utilizing SUDS measures on site and with a peak flow rate of 124.5 l/s for the redeveloped area provided.

The attenuation required on the site was reviewed in utilising the M5-60 and r values from the Wallingford Procedure. The Wallingford procedure was used to generate the rainfall data for the 1 in 1 year, 1 in 10 year, 1 in 30 year and 1 in 100 year events. Additionally, the 1 in 10 year and 1 in 100 year plus 40% events were considered in keeping with the Flood Risk Assessment.

The Appendix of the report includes the details of the storm water analysis. Hydraulic modelling has been completed to verify the attenuation storage prevents out of sewer flooding for events up to 1 in 30 years and any events up to 1 in 100 year plus 40% Climate Change, when flooding is triggered, are contained within the site.

3.3 Storage Requirements.

The redeveloped site will retain the existing building for the construction works. Therefore, for the Construction Period the storage provided for the Construction Period will be 1 in 10 year event plus a 40% Climate Change allowance. The storage required would be 151m^3, see the appendix of the report for the detailed calculations.

Phase 2 of the development will result in the demolition of the existing building on the site. The final storm drainage strategy will require storage for events up to 1 in 100 year plus 40% Climate Change. The storage volume for the final site will be 580m^3 storage. The additional storage of 429m^3 will be installed in the phase 2 of the works. A Hydrobrake flow control device will be installed in the system to limit flows to 124.5 l/s.

The design has been developed to accommodate flows up to an include a 1 in 100 year plus 40% Climate Change Storm. The carpark area will be available for additional storage for larger or prolonged events or for flooding as a result of blockages. Kerbing in the car park will provide storage to top of kerb level and there is a storage capacity of circa 980m^3 available in the car park zone. Thus ensuring that any flooding events will be contained with the site. Hydraulic Modelling has been completed and the largest volume of flooding generated was a combined total of 166m^3, as there is capacity for up to 980m^3 within the carpark, the site will provide below ground and exceedance storage within the confines of the site.

3.4 SUDS Maintenance

The Drainage Infrastructure on the site will be maintained by the Contractor for the Maintenance Period after completion and handover. Long term the Owner/Operator of the Rivermead Leisure Centre site will be responsible for the ongoing maintenance of the Drainage Infrastructure. The below Table 1 outlines the Maintenance Schedule for the site.

Drainage Infrastructure Item	General Maintenance	Responsibility
Channel Drainage	Annual visual inspection for blockage and cleaning as necessary.	Owner/Operator
Drainage Pipework	Jet and Clean as necessary.	Owner/Operator
Manholes/Silt Trap/Catchpits	Remove cover annually to check for any sign of blockage and cleaning as necessary. Empty sumps as required.	Owner/Operator
Oil Separators	Check alarm for any notifications. Regular maintenance as Manufacturer requirements.	Owner/Operator
Attenuation Crate System	Annual maintenance as required by the manufacturer	Owner/Operator

Table 1 - SUDS Maintenance

3.5 Conclusions

The brownfield site will be developed to ensure that the runoff from the site is restricted with 50% betterment to outflow rates from the existing development for Q_1 Calculated runoff rates, in the initial phase of the redevelopment attenuation of 151m^3, sufficient for events up to 1 in 10 year plus 40% Climate Change will be provided on site. The 1 in 100 years plus 40% Climate Change rainfall events will be contained within the site, with the installation of an additionally 429m^3 storage in the second phase of the development and capacity for storage of exceedance flows within the future carpark area, the storage area is in excess of the volume required. A hydrobrake flow control device will attenuate flows to 124.5 l/s providing betterment of 50% from existing site runoff rates. The treated and attenuated storm water will discharge to the existing Thames Water sewer network via the existing connection.

4 Appendices

Appendix A – 6265-FUR-RM-ZZ-DR-D-0911 Proposed Drainage Layout

6265-FUR-RM-ZZ-DR-D-0931 Construction Details

Appendix B – Modified Rational – Existing Flows

Modified Rational – Proposed Flows

1 in 10 year plus 40% Climate Change – Storage Analysis

1 in 100 year plus 40% Climate Change – Storage Analysis

Micro drainage Analysis results

Appendix C – Hydrobrake Details

Appendix D – Attenuation Crate System

APPENDIX A

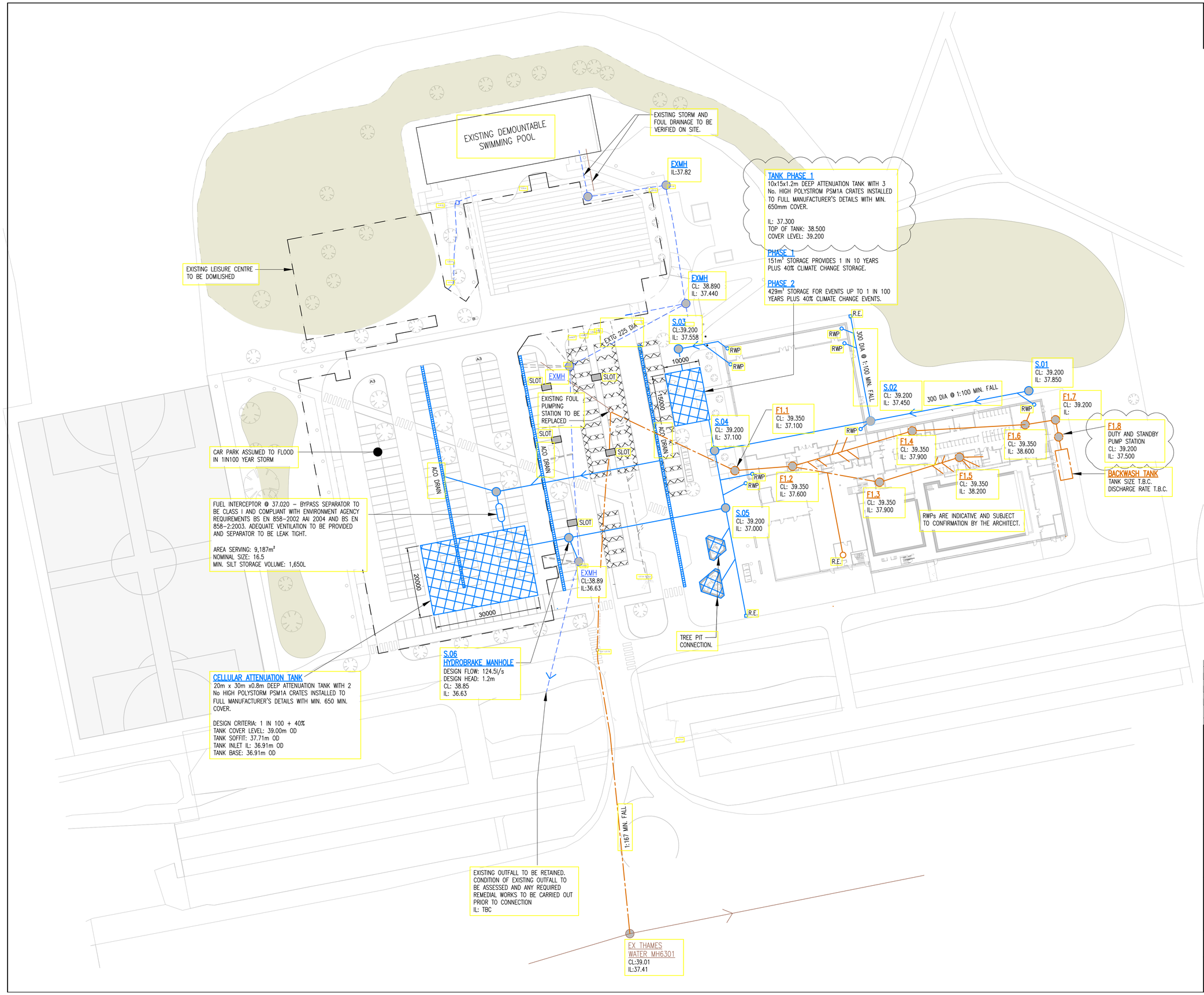

GENERAL NOTES

1. REFER TO DRAWING XXXX-FP-XX-XX-DR-S-0001 FOR ALL GENERAL NOTES.

LEGEND.

- NEW MAIN FOUL SEWERS
- NEW BRANCH FOUL SEWERS
- EXISTING FOUL SEWERS
- NEW SURFACE WATER SEWERS
- EXISTING SURFACE WATER SEWERS
- CONCRETE ENCASED SW SEWER
- CONCRETE ENCASED FW SEWER
- SXX — NEW SURFACE WATER MANHOLE
- FXX — NEW FOUL MANHOLE
- ABANDONED SEWER TO BE REMOVED
- SURFACE WATER RISING MAIN
- EXISTING SURFACE WATER RISING MAIN
- DRAINAGE CHANNEL
- PETROL INTERCEPTOR
- G — ROAD GULLY
- g — INTERNAL GULLY (TRAPPED & RODDABLE)
- RWP — RAIN WATER PIPE
- SVP — SOIL VENT PIPE (RODDABLE ACCESS)
- SU — TRAPPED SUMP UNIT
- SLOT — SLOT THROUGH KERB

Rev	Date	Comment	By	Check
P04	06.08.21	ISSUED FOR REVIEW AND COMMENT	AR	LF
P03	02.08.21	ISSUED FOR REVIEW AND COMMENT	AR	LF
P02	09.07.21	ISSUED FOR REVIEW AND COMMENT	AR	LF
P01	27.11.20	INFORMATION	AR	LF

Status Code: S3

Drawing Status: PRELIMINARY

This drawing may only be used for construction/manufacture if status is CONSTRUCTION

Furness Partnership
Consulting Structural/Civil Engineers
■ London 20 Britton Street, London, EC1M 5TX
tel: 020 7490 4353 fax: 020 7490 4354
e-mail: info@furnesspartnership.com
□ Bradford The Paper Hall, Anne Gate, Bradford, BD1 4EQ
tel: 01274 392092
e-mail: mail@furnesspartnership.com

Project

RIVERMEAD LEISURE CENTRE

Drawing Title

PROPOSED DRAINAGE LAYOUT

FP Job No.	Drawn	Date	Checked	Scale @ A1
6265	AR	NOV. 2020	NF	1:500

PROJECT	OPERATOR	ZONE / VOLUME	LEVEL / LOCATION	FILE TYPE	ROLE	SHEET No.	Rev.
61496	FUR	RM	ZZ	DR	D	0911	P04

TYPICAL HYDROBRAKE MANHOLE DETAIL

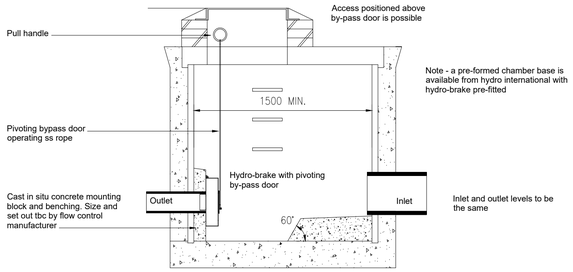

FIGURE B.24
CONNECTIONS TO SEWER

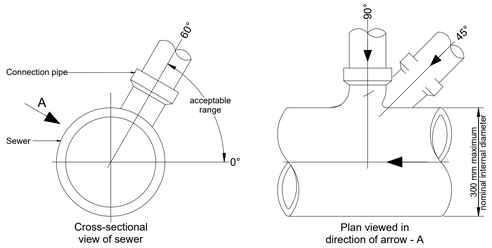

FIGURE B.26
JOINTS FOR CONCRETE ENCASED PIPES

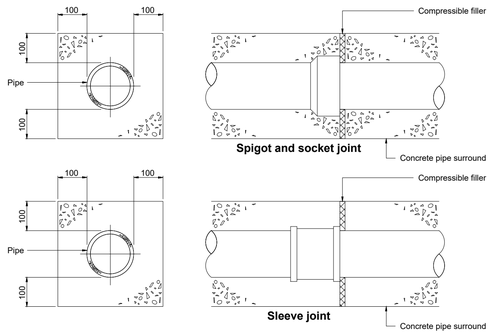

TYPICAL MANHOLE DETAIL - TYPE 2 (Alternative construction detail)
Maximum depth from cover level to soffit of pipe 3.0 m

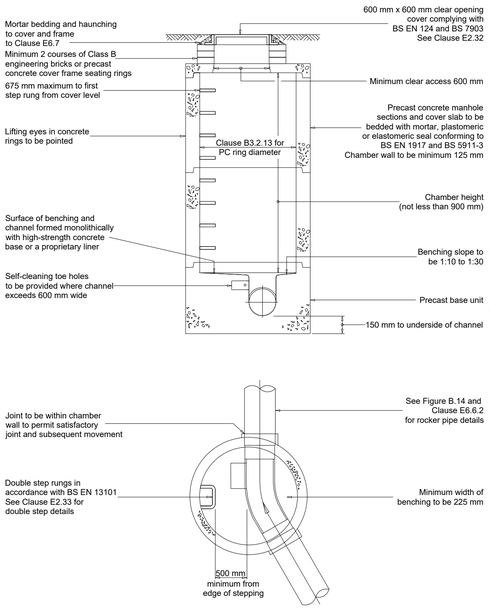

Not to scale

TYPICAL ARRANGEMENT OF PIPE JUNCTIONS WITHIN MANHOLES

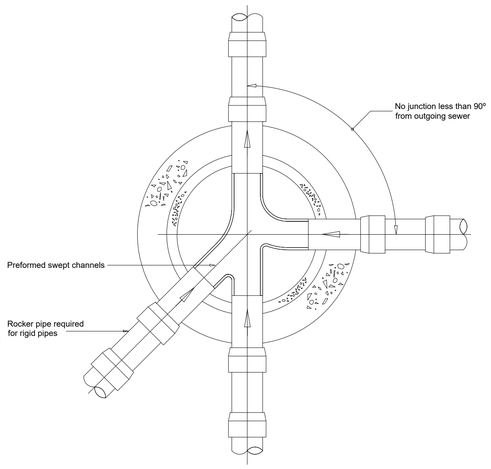

Sectional Plan

Rigid pipes built into manhole should have a flexible joint as close as feasible to the external face of the structure and the length of the next rocker pipe should be as shown.

Nominal diameter (mm)	Maximum effective length (m)
150 - 600	0.6
601 - 750	1.00
over 750	1.25

All pipes entering the bottom of the manhole to have soffits level.

FIGURE B.15
TYPICAL VERTICAL AND RAMPED BACKDROP DETAIL
Note: Steeper gradients are preferred to the use of backdrops.
Type of backdrop to be used to be agreed with Undertaker.

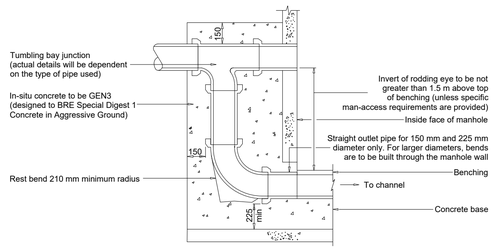

External Vertical Backdrop

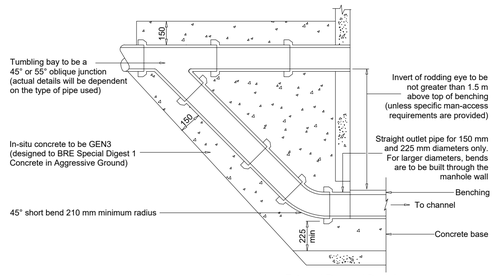

External Ramped Backdrop

Not to scale, dimensions in millimetres

Rev	Date	Comment	By	Check
P01	09.07.21	ISSUED FOR REVIEW AND COMMENT	AR	LF

Status Code: S3
Drawing Status: PRELIMINARY

This drawing may only be used for construction/manufacture if status is CONSTRUCTION

Furness Partnership
Consulting Structural/Civil Engineers
■ London 20 Britton Street, London, EC1M 5TX
tel: 020 7490 4353 fax: 020 7490 4354
e-mail: info@furnesspartnership.com
□ Bradford The Paper Hall, Anne Gate, Bradford, BD1 4EQ
tel: 01274 392092
e-mail: mail@furnesspartnership.com

Project
RIVERMEAD LEISURE CENTRE

Drawing Title
PROPOSED DRAINAGE DETAILS
SHEET 1

FP Job No.	Drawn	Date	Checked	Scale @ A1
6265	A.R.	JULY 2021	L.F.	N.T.S.

PROJECT	OPERATOR	ZONE / VOLUME	LEVEL / LOCATION	FILE TYPE	ROLE	SHEET No.	Rev.
61496	FUR	PP	ZZ	DR	D	0931	P01

APPENDIX B

Modified Rational Method

Existing Surface Water – site area

Site Area – 49,000m^2

Developable Area – 25,892m^2

Modified Rational Equation –

Q_n = 2.78 CiA

C – runoff coefficient = 1.0

I_n – rainfall intensity for return period (mm/hr)

A – impermeable area (Ha)

Q_n – Runoff for return period

Rainfall Intensity – extracted from Transport and Road Research Laboratory Report – Estimated rainfall for drainage calculations in the United Kingdom (TRRL Report LR 595)

i_1 – 50.8 mm/hr

i_{30} – 113.02mm/hr

i_{10} – 94.9mm/hr

i_{100} – 143.9 mm/hr

Q_1 = 2.78 x 1.0 x 50.8 x 2.59 = 355.2 l/s

Q_{10} = 2.78 x 1.0 x 94.9 x 2.59 = 683.3 l/s

Q_{30} = 2.78 x 1.0 x 113.02 x 2.59 = 813.8 l/s

Q_{100} = 2.78 x 1.0 x 143.9 x 2.59 = 1,036.1 l/s

Modified Rational Method

Proposed Surface Water – redeveloped site area.

Site Area – 49,000m^2

Developable Area – 17,688m^2

Modified Rational Equation –

Q_n = 2.78 CiA

C – runoff coefficient = 1.0

I_n – rainfall intensity for return period (mm/hr)

A – impermeable area (Ha)

Q_n – Runoff for return period

Rainfall Intensity – extracted from Transport and Road Research Laboratory Report – Estimated rainfall for drainage calculations in the United Kingdom (TRRL Report LR 595)

i_1 – 50.8 mm/hr

i_{30} – 113.02mm/hr

i_{10} – 94.9mm/hr

i_{100} – 143.9 mm/hr

Q_1 = 2.78 x 1.0 x 50.8 x 1.77 = 249.9 l/s

Q_{10} = 2.78 x 1.0 x 94.9 x 1.77= 466.9 l/s

Q_{30} = 2.78 x 1.0 x 113.02 x 1.77 = 556.1 l/s

Q_{100} = 2.78 x 1.0 x 143.9 x 1.77 = 708.1 l/s

Attenuation Tank Capacity Calculation
Project: Rivermead Leisure Centre **Project No: -** 6265
Part of Strucutre: Full Site
Date:30/07/2021 **Made By** - SMGM **Checked By** - SMGM

Storm Duration (Hours)	Rainfall Intensity (mm)	Total S.W. (m3)	Allowable Discharge (m3)	Attenuate (m3)
0.25	14.88	263.19744	112.05	151.147
0.5	19.84	350.92992	224.1	126.830
1	24.8	438.6624	448.2	n/a
2	27.28	482.52864	896.4	n/a
4	31	548.328	1792.8	n/a
6	39.68	701.85984	2689.2	n/a
10	47.12	833.45856	4482	n/a
24	52.08	921.19104	19756.8	n/a
48	64.48	1140.52224	21513.6	n/a

Project Specific Input

17,688 = Impermeable Area (m²)

17,688 = Equivalent Impermeable Area (m²)

Local Authority Specified:
155 = Attenuated Flow Rate (l/s)
10 = Return Period (yrs)

Site Area - 4.9 hectares

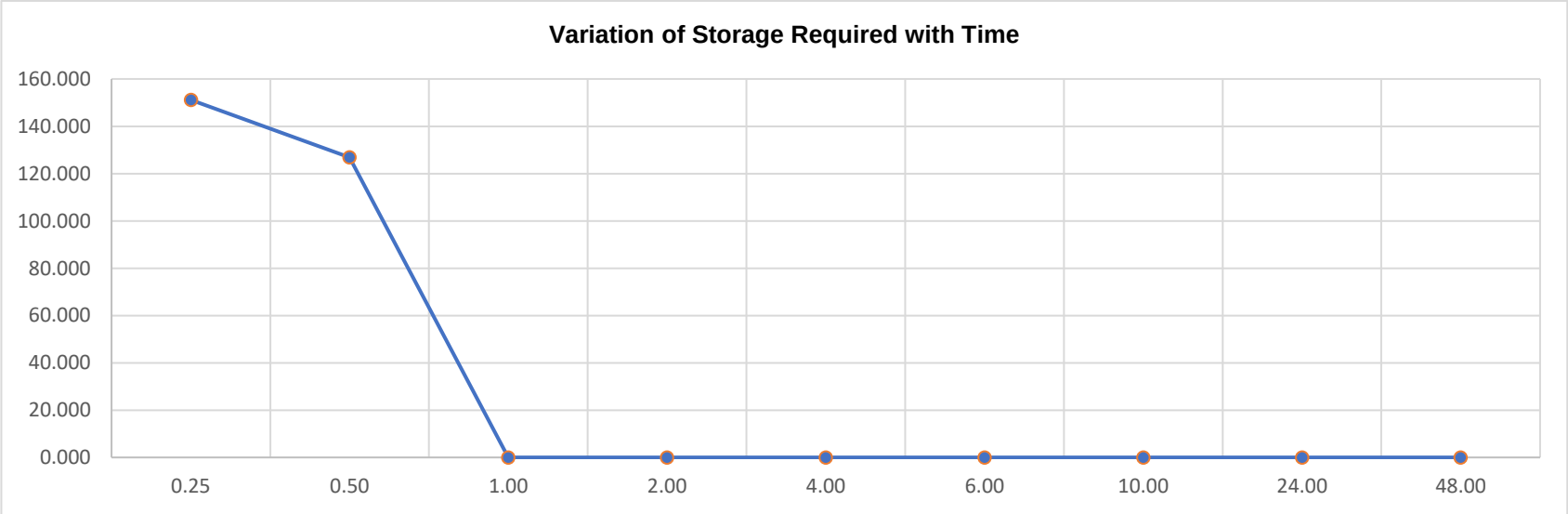

Attenuation Tank Capacity Calculation
Project: Rivermead Leisure Centre **Project No: -** 6265
Part of Strucutre: Redeveloped site
Date:30/07/2021 **Made By** - SMGM **Checked By** - SMGM

Storm Duration (Hours)	Rainfall Intensity (mm)	Total S.W. (m3)	Allowable Discharge (m3)	Attenuate (m3)
0.25	34.104	603.231552	112.05	491.182
0.5	45.47	804.27336	224.1	580.173
1	56.84	1005.38592	448.2	557.186
2	62.52	1105.85376	896.4	209.454
4	71.05	1256.7324	1792.8	n/a
6	90.94	1608.54672	2689.2	n/a
10	107.99	1910.12712	4482	n/a
24	119.36	2111.23968	19756.8	n/a
48	147.78	2613.93264	21513.6	n/a

Project Specific Input

17,688= Impermeable Area (m²)

17,688 = Equivalent Impermeable Area (m²)

Local Authority Specified:
124.5 = Attenuated Flow Rate (l/s)
100 = Return Period (yrs)

Site Area - 4.9 hectares

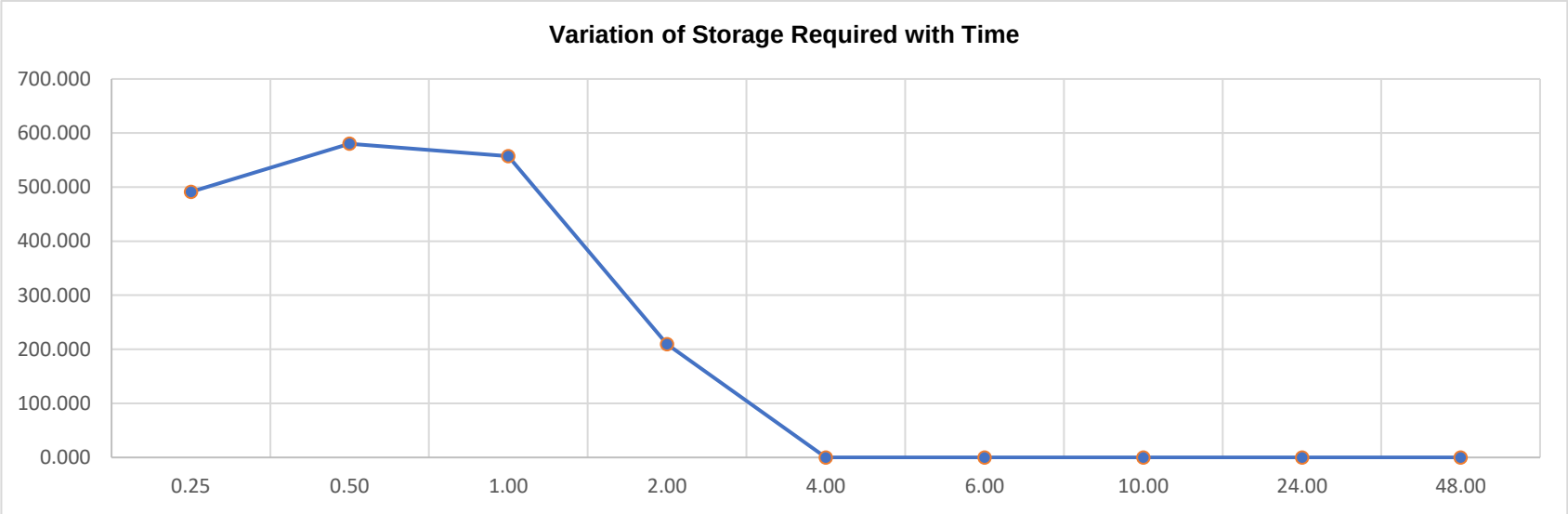

JOB NAME	RIVERMEAD LEISURE CENTRE
JOB No.	6265
	STORM WATER MODEL RESULTS 1IN 10 YEAR 1 IN 100 YEAR P 1 IN 100 YEAR PLUS 40% CC
	July 2021

RESULTS

Revision	Date	Issue Status	Hydraulic Modeller
A	JULY '21	INFORMATION	SMGM

This report has been prepared for the sole benefit, use and information of the Client, for the purposes described and the liability of Furness Partnership Ltd. in respect of the information contained within the report will not extend to any third party.

STORM SEWER DESIGN by the Modified Rational Method

Network Design Table for

« - Indicates pipe capacity < flow

PN	Length (m)	Fall (m)	Slope (1:X)	I.Area (ha)	T.E. (mins)	Base Flow (l/s)	k (mm)	n	HYD SECT	DIA (mm)	Section Type	Auto Design
1.000	44.900	0.225	200.0	0.113	5.00	0.0	0.305	0.010	o	300	Pipe/Conduit	
1.001	32.700	0.131	250.0	0.113	0.00	0.0	0.305	0.010	o	300	Pipe/Conduit	
1.002	53.900	0.216	249.5	0.113	0.00	0.0	0.305	0.010	o	300	Pipe/Conduit	
1.003	5.300	0.090	58.9	0.071	0.00	0.0	0.305	0.010	o	300	Pipe/Conduit	
1.004	20.350	0.183	111.2	0.068	0.00	0.0	0.305	0.010	o	300	Pipe/Conduit	
1.005	48.500	0.243	199.6	0.000	0.00	0.0	0.305	0.010	o	150	Pipe/Conduit	
1.006	4.437	0.022	201.7	0.000	0.00	0.0	0.122	0.010	o	150	Pipe/Conduit	
1.007	22.130	0.221	100.1	0.000	0.00	0.0	0.122	0.010	o	450	Pipe/Conduit	
1.008	29.760	0.298	99.9	0.000	0.00	0.0	0.122	0.010	o	450	Pipe/Conduit	

Network Results Table

PN	Rain (mm/hr)	T.C. (mins)	US/IL (m)	Σ I.Area (ha)	Σ Base Flow (l/s)	Foul (l/s)	Add Flow (l/s)	Vel (m/s)	Cap (l/s)	Flow (l/s)
1.000	50.00	5.62	38.150	0.113	0.0	0.0	0.0	1.20	84.6	20.4
1.001	50.00	6.13	37.930	0.226	0.0	0.0	0.0	1.07	75.5	40.8
1.002	50.00	6.97	37.790	0.339	0.0	0.0	0.0	1.07	75.6	61.2
1.003	50.00	7.01	37.560	0.410	0.0	0.0	0.0	2.23	157.4	74.0
1.004	50.00	7.22	37.470	0.478	0.0	0.0	0.0	1.61	114.1	86.3
1.005	50.00	8.28	37.290	0.478	0.0	0.0	0.0	0.77	13.6«	86.3
1.006	50.00	8.37	37.050	0.478	0.0	0.0	0.0	0.83	14.7«	86.3
1.007	50.00	8.52	36.910	0.478	0.0	0.0	0.0	2.40	381.2	86.3
1.008	50.00	8.73	36.630	0.478	0.0	0.0	0.0	2.40	381.7	86.3

©1982-2019 Innovyze

Manhole Schedules for

MH Name	MH CL (m)	MH Depth (m)	MH Connection	MH Diam.,L*W (mm)	PN	Pipe Out Invert Level (m)	Diameter (mm)	PN	Pipes In Invert Level (m)	Diameter (mm)	Backdrop (mm)
S01	39.350	1.200	Open Manhole	1200	1.000	38.150	300				
S02	39.350	1.425	Open Manhole	1200	1.001	37.930	300	1.000	37.926	300	
S03	39.350	1.560	Open Manhole	1200	1.002	37.790	300	1.001	37.799	300	9
S04	39.350	1.790	Open Manhole	1200	1.003	37.560	300	1.002	37.574	300	14
TANK 1	39.350	1.880	Open Manhole	1200	1.004	37.470	300	1.003	37.470	300	
S05	39.350	2.063	Open Manhole	1200	1.005	37.290	150	1.004	37.287	300	
S06	38.890	1.843	Open Manhole	1200	1.006	37.050	150	1.005	37.047	150	
S13	39.000	2.090	Open Manhole	1350	1.007	36.910	450	1.006	37.028	150	
MH-29	38.890	2.260	Open Manhole	1350	1.008	36.630	450	1.007	36.689	450	59
O-1	39.020	2.688	Open Manhole	225		OUTFALL		1.008	36.332	450	

No coordinates have been specified, layout information cannot be produced.

©1982-2019 Innovyze

PIPELINE SCHEDULES for

Upstream Manhole

PN	Hyd Sect	Diam (mm)	MH Name	C.Level (m)	I.Level (m)	D.Depth (m)	MH Connection	MH DIAM., L*W (mm)
1.000	o	300	S01	39.350	38.150	0.900	Open Manhole	1200
1.001	o	300	S02	39.350	37.930	1.120	Open Manhole	1200
1.002	o	300	S03	39.350	37.790	1.260	Open Manhole	1200
1.003	o	300	S04	39.350	37.560	1.490	Open Manhole	1200
1.004	o	300	TANK 1	39.350	37.470	1.580	Open Manhole	1200
1.005	o	150	S05	39.350	37.290	1.910	Open Manhole	1200
1.006	o	150	S06	38.890	37.050	1.690	Open Manhole	1200
1.007	o	450	S13	39.000	36.910	1.640	Open Manhole	1350
1.008	o	450	MH-29	38.890	36.630	1.810	Open Manhole	1350

Downstream Manhole

PN	Length (m)	Slope (1:X)	MH Name	C.Level (m)	I.Level (m)	D.Depth (m)	MH Connection	MH DIAM., L*W (mm)
1.000	44.900	200.0	S02	39.350	37.926	1.125	Open Manhole	1200
1.001	32.700	250.0	S03	39.350	37.799	1.251	Open Manhole	1200
1.002	53.900	249.5	S04	39.350	37.574	1.476	Open Manhole	1200
1.003	5.300	58.9	TANK 1	39.350	37.470	1.580	Open Manhole	1200
1.004	20.350	111.2	S05	39.350	37.287	1.763	Open Manhole	1200
1.005	48.500	199.6	S06	38.890	37.047	1.693	Open Manhole	1200
1.006	4.437	201.7	S13	39.000	37.028	1.822	Open Manhole	1350
1.007	22.130	100.1	MH-29	38.890	36.689	1.751	Open Manhole	1350
1.008	29.760	99.9	O-1	39.020	36.332	2.238	Open Manhole	225

Free Flowing Outfall Details for

Outfall Pipe Number	Outfall Name	C. Level (m)	I. Level (m)	Min I. Level (m)	D,L (mm)	W (mm)
1.008	O-1	39.020	36.332	36.452	225	0

Simulation Criteria for

Volumetric Runoff Coeff	1.000	Additional Flow - % of Total Flow	0.000
Areal Reduction Factor	1.000	MADD Factor * 10m³/ha Storage	2.000
Hot Start (mins)	0	Inlet Coeffiecient	0.800
Hot Start Level (mm)	0	Flow per Person per Day (l/per/day)	0.000
Manhole Headloss Coeff (Global)	0.500	Run Time (mins)	60
Foul Sewage per hectare (l/s)	0.000	Output Interval (mins)	1

Number of Input Hydrographs	0	Number of Storage Structures	1
Number of Online Controls	2	Number of Time/Area Diagrams	0
Number of Offline Controls	0	Number of Real Time Controls	0

Synthetic Rainfall Details

©1982-2019 Innovyze

Simulation Criteria for

Rainfall Model	FSR	Profile Type	Summer
Return Period (years)	100	Cv (Summer)	1.000
Region	England and Wales	Cv (Winter)	0.840
M5-60 (mm)	18.700	Storm Duration (mins)	30
Ratio R	0.400		

©1982-2019 Innovyze

Online Controls for

Orifice Manhole: TANK 1, DS/PN: 1.004, Volume (m³): 2.4

Diameter (m) 0.225 Discharge Coefficient 0.600 Invert Level (m) 37.470

Hydro-Brake® Optimum Manhole: S13, DS/PN: 1.007, Volume (m³): 3.0

Unit Reference	MD-SCL-0392-1245-1200-1245
Design Head (m)	1.200
Design Flow (l/s)	124.5
Flush-Flo™	Calculated
Objective	Minimise blockage risk
Application	Surface
Sump Available	Yes
Diameter (mm)	392
Invert Level (m)	36.910
Minimum Outlet Pipe Diameter (mm)	450
Suggested Manhole Diameter (mm)	Site Specific Design (Contact Hydro International)

Control Points	Head (m)	Flow (l/s)
Design Point (Calculated)	1.200	124.5
Flush-Flo™	0.482	124.5
Kick-Flo®	0.879	107.1
Mean Flow over Head Range	-	94.8

The hydrological calculations have been based on the Head/Discharge relationship for the Hydro-Brake® Optimum as specified. Should another type of control device other than a Hydro-Brake Optimum® be utilised then these storage routing calculations will be invalidated

Depth (m)	Flow (l/s)	Depth (m)	Flow (l/s)	Depth (m)	Flow (l/s)	Depth (m)	Flow (l/s)
0.100	12.0	1.200	124.5	3.000	194.5	7.000	294.5
0.200	42.7	1.400	134.2	3.500	209.7	7.500	304.6
0.300	82.1	1.600	143.2	4.000	223.9	8.000	314.4
0.400	115.3	1.800	151.6	4.500	237.1	8.500	323.9
0.500	124.5	2.000	159.6	5.000	249.7	9.000	333.2
0.600	122.7	2.200	167.2	5.500	261.6	9.500	342.1
0.800	113.4	2.400	174.4	6.000	273.0		
1.000	114.0	2.600	181.4	6.500	284.0		

©1982-2019 Innovyze

Storage Structures for

Cellular Storage Manhole: TANK 1, DS/PN: 1.004

Invert Level (m) 37.384 Safety Factor 2.0
Infiltration Coefficient Base (m/hr) 0.00000 Porosity 0.90
Infiltration Coefficient Side (m/hr) 0.00000

Depth (m)	Area (m²)	Inf. Area (m²)	Depth (m)	Area (m²)	Inf. Area (m²)
0.000	150.0	150.0	1.300	0.0	234.0
1.200	150.0	234.0			

©1982-2019 Innovyze

1 year Return Period Summary of Critical Results by Maximum Level (Rank 1) for

Simulation Criteria

Areal Reduction Factor 1.000 Additional Flow - % of Total Flow 0.000
Hot Start (mins) 0 MADD Factor * 10m³/ha Storage 2.000
Hot Start Level (mm) 0 Inlet Coeffiecient 0.800
Manhole Headloss Coeff (Global) 0.500 Flow per Person per Day (l/per/day) 0.000
Foul Sewage per hectare (l/s) 0.000

Number of Input Hydrographs 0 Number of Storage Structures 1
Number of Online Controls 2 Number of Time/Area Diagrams 0
Number of Offline Controls 0 Number of Real Time Controls 0

Synthetic Rainfall Details

Rainfall Model FSR Ratio R 0.400
Region England and Wales Cv (Summer) 0.785
M5-60 (mm) 20.000 Cv (Winter) 0.840

Margin for Flood Risk Warning (mm) 300.0 DVD Status OFF
Analysis Timestep Fine Inertia Status OFF
DTS Status ON

Profile(s) Summer and Winter
Duration(s) (mins) 15, 30, 60, 120, 180, 240, 360, 480, 600, 720, 960, 1440, 2160, 2880, 4320, 5760, 7200, 8640, 10080
Return Period(s) (years) 1, 10, 30, 100
Climate Change (%) 0, 0, 0, 0

PN	US/MH Name	Storm	Return Period	Climate Change	First (X) Surcharge	First (Y) Flood	First (Z) Overflow	Overflow Act.	Water Level (m)
1.000	S01	15 Winter	1	+0%	30/15 Summer				38.241
1.001	S02	15 Winter	1	+0%	30/15 Summer				38.064
1.002	S03	15 Winter	1	+0%	10/15 Summer				37.953
1.003	S04	15 Winter	1	+0%	10/15 Summer				37.732
1.004	TANK 1	60 Winter	1	+0%	10/30 Summer				37.630
1.005	S05	120 Summer	1	+0%	1/30 Winter				37.473
1.006	S06	240 Summer	1	+0%	1/30 Summer				37.216
1.007	S13	60 Winter	1	+0%					37.016
1.008	MH-29	60 Winter	1	+0%					36.690

PN	US/MH Name	Surcharged Depth (m)	Flooded Volume (m³)	Flow / Cap.	Overflow (l/s)	Pipe Flow (l/s)	Status	Level Exceeded
1.000	S01	-0.209	0.000	0.20		15.4	OK	
1.001	S02	-0.166	0.000	0.41		27.8	OK	
1.002	S03	-0.137	0.000	0.55		39.0	OK	
1.003	S04	-0.128	0.000	0.62		46.3	OK	

©1982-2019 Innovyze

1 year Return Period Summary of Critical Results by Maximum Level (Rank 1) for

PN	US/MH Name	Surcharged Depth (m)	Flooded Volume (m³)	Flow / Cap.	Overflow (l/s)	Pipe Flow (l/s)	Status	Level Exceeded
1.004	TANK 1	-0.140	0.000	0.15		15.0	OK	
1.005	S05	0.033	0.000	1.01		13.3	SURCHARGED	
1.006	S06	0.016	0.000	1.24		13.3	SURCHARGED	
1.007	S13	-0.344	0.000	0.05		13.4	OK	
1.008	MH-29	-0.390	0.000	0.04		13.4	OK	

©1982-2019 Innovyze

10 year Return Period Summary of Critical Results by Maximum Level (Rank 1) for

Simulation Criteria

Areal Reduction Factor 1.000 Additional Flow - % of Total Flow 0.000
Hot Start (mins) 0 MADD Factor * 10m³/ha Storage 2.000
Hot Start Level (mm) 0 Inlet Coeffiecient 0.800
Manhole Headloss Coeff (Global) 0.500 Flow per Person per Day (l/per/day) 0.000
Foul Sewage per hectare (l/s) 0.000

Number of Input Hydrographs 0 Number of Storage Structures 1
Number of Online Controls 2 Number of Time/Area Diagrams 0
Number of Offline Controls 0 Number of Real Time Controls 0

Synthetic Rainfall Details

Rainfall Model FSR Ratio R 0.400
Region England and Wales Cv (Summer) 0.785
M5-60 (mm) 20.000 Cv (Winter) 0.840

Margin for Flood Risk Warning (mm) 300.0 DVD Status OFF
Analysis Timestep Fine Inertia Status OFF
DTS Status ON

Profile(s) Summer and Winter
Duration(s) (mins) 15, 30, 60, 120, 180, 240, 360, 480, 600, 720, 960, 1440, 2160, 2880, 4320, 5760, 7200, 8640, 10080
Return Period(s) (years) 1, 10, 30, 100
Climate Change (%) 0, 0, 0, 0

PN	US/MH Name	Storm	Return Period	Climate Change	First (X) Surcharge	First (Y) Flood	First (Z) Overflow	Overflow Act.	Water Level (m)
1.000	S01	15 Winter	10	+0%	30/15 Summer				38.280
1.001	S02	15 Summer	10	+0%	30/15 Summer				38.217
1.002	S03	15 Summer	10	+0%	10/15 Summer				38.139
1.003	S04	15 Winter	10	+0%	10/15 Summer				37.884
1.004	TANK 1	60 Winter	10	+0%	10/30 Summer				37.829
1.005	S05	60 Winter	10	+0%	1/30 Winter				37.766
1.006	S06	60 Winter	10	+0%	1/30 Summer				37.263
1.007	S13	60 Winter	10	+0%					37.038
1.008	MH-29	60 Winter	10	+0%					36.702

PN	US/MH Name	Surcharged Depth (m)	Flooded Volume (m³)	Flow / Cap.	Overflow (l/s)	Pipe Flow (l/s)	Status	Level Exceeded
1.000	S01	-0.170	0.000	0.38		29.7	OK	
1.001	S02	-0.013	0.000	0.78		53.2	OK	
1.002	S03	0.049	0.000	1.06		75.4	SURCHARGED	
1.003	S04	0.024	0.000	1.18		88.9	SURCHARGED	

©1982-2019 Innovyze

10 year Return Period Summary of Critical Results by Maximum Level (Rank 1) for

PN	US/MH Name	Surcharged Depth (m)	Flooded Volume (m³)	Flow / Cap.	Overflow (l/s)	Pipe Flow (l/s)	Status	Level Exceeded
1.004	TANK 1	0.059	0.000	0.22		21.5	SURCHARGED	
1.005	S05	0.326	0.000	1.45		19.1	SURCHARGED	
1.006	S06	0.063	0.000	1.77		19.1	SURCHARGED	
1.007	S13	-0.322	0.000	0.07		19.1	OK	
1.008	MH-29	-0.378	0.000	0.06		19.1	OK	

©1982-2019 Innovyze

30 year Return Period Summary of Critical Results by Maximum Level (Rank 1) for

Simulation Criteria

Areal Reduction Factor 1.000 Additional Flow - % of Total Flow 0.000
Hot Start (mins) 0 MADD Factor * 10m³/ha Storage 2.000
Hot Start Level (mm) 0 Inlet Coeffiecient 0.800
Manhole Headloss Coeff (Global) 0.500 Flow per Person per Day (l/per/day) 0.000
Foul Sewage per hectare (l/s) 0.000

Number of Input Hydrographs 0 Number of Storage Structures 1
Number of Online Controls 2 Number of Time/Area Diagrams 0
Number of Offline Controls 0 Number of Real Time Controls 0

Synthetic Rainfall Details

Rainfall Model FSR Ratio R 0.400
Region England and Wales Cv (Summer) 0.785
M5-60 (mm) 20.000 Cv (Winter) 0.840

Margin for Flood Risk Warning (mm) 300.0 DVD Status OFF
Analysis Timestep Fine Inertia Status OFF
DTS Status ON

Profile(s) Summer and Winter
Duration(s) (mins) 15, 30, 60, 120, 180, 240, 360, 480, 600, 720, 960, 1440, 2160, 2880, 4320, 5760, 7200, 8640, 10080
Return Period(s) (years) 1, 10, 30, 100
Climate Change (%) 0, 0, 0, 0

PN	US/MH Name	Storm	Return Period	Climate Change	First (X) Surcharge	First (Y) Flood	First (Z) Overflow	Overflow Act.	Water Level (m)
1.000	S01	15 Summer	30	+0%	30/15 Summer				38.473
1.001	S02	15 Summer	30	+0%	30/15 Summer				38.427
1.002	S03	15 Summer	30	+0%	10/15 Summer				38.317
1.003	S04	60 Winter	30	+0%	10/15 Summer				37.963
1.004	TANK 1	60 Winter	30	+0%	10/30 Summer				37.955
1.005	S05	120 Winter	30	+0%	1/30 Winter				37.932
1.006	S06	60 Winter	30	+0%	1/30 Summer				37.282
1.007	S13	60 Winter	30	+0%					37.045
1.008	MH-29	60 Winter	30	+0%					36.706

PN	US/MH Name	Surcharged Depth (m)	Flooded Volume (m³)	Flow / Cap.	Overflow (l/s)	Pipe Flow (l/s)	Status	Level Exceeded
1.000	S01	0.023	0.000	0.44		34.4	SURCHARGED	
1.001	S02	0.197	0.000	0.93		63.1	SURCHARGED	
1.002	S03	0.227	0.000	1.26		89.4	SURCHARGED	
1.003	S04	0.103	0.000	0.86		64.7	SURCHARGED	

©1982-2019 Innovyze

30 year Return Period Summary of Critical Results by Maximum Level (Rank 1) for

PN	US/MH Name	Surcharged Depth (m)	Flooded Volume (m³)	Flow / Cap.	Overflow (l/s)	Pipe Flow (l/s)	Status	Level Exceeded
1.004	TANK 1	0.185	0.000	0.23		22.5	SURCHARGED	
1.005	S05	0.492	0.000	1.56		20.6	SURCHARGED	
1.006	S06	0.082	0.000	1.94		21.0	SURCHARGED	
1.007	S13	-0.315	0.000	0.08		21.0	OK	
1.008	MH-29	-0.374	0.000	0.07		21.0	OK	

©1982-2019 Innovyze

100 year Return Period Summary of Critical Results by Maximum Level (Rank 1) for

Simulation Criteria

Areal Reduction Factor 1.000 Additional Flow - % of Total Flow 0.000
Hot Start (mins) 0 MADD Factor * 10m³/ha Storage 2.000
Hot Start Level (mm) 0 Inlet Coeffiecient 0.800
Manhole Headloss Coeff (Global) 0.500 Flow per Person per Day (l/per/day) 0.000
Foul Sewage per hectare (l/s) 0.000

Number of Input Hydrographs 0 Number of Storage Structures 1
Number of Online Controls 2 Number of Time/Area Diagrams 0
Number of Offline Controls 0 Number of Real Time Controls 0

Synthetic Rainfall Details

Rainfall Model FSR Ratio R 0.400
Region England and Wales Cv (Summer) 0.785
M5-60 (mm) 20.000 Cv (Winter) 0.840

Margin for Flood Risk Warning (mm) 300.0 DVD Status OFF
Analysis Timestep Fine Inertia Status OFF
DTS Status ON

Profile(s) Summer and Winter
Duration(s) (mins) 15, 30, 60, 120, 180, 240, 360, 480, 600, 720, 960, 1440, 2160, 2880, 4320, 5760, 7200, 8640, 10080
Return Period(s) (years) 1, 10, 30, 100
Climate Change (%) 0, 0, 0, 0

PN	US/MH Name	Storm	Return Period	Climate Change	First (X) Surcharge	First (Y) Flood	First (Z) Overflow	Overflow Act.	Water Level (m)
1.000	S01	15 Summer	100	+0%	30/15 Summer				38.930
1.001	S02	15 Summer	100	+0%	30/15 Summer				38.864
1.002	S03	15 Summer	100	+0%	10/15 Summer				38.680
1.003	S04	60 Winter	100	+0%	10/15 Summer				38.151
1.004	TANK 1	60 Winter	100	+0%	10/30 Summer				38.142
1.005	S05	120 Winter	100	+0%	1/30 Winter				38.105
1.006	S06	60 Winter	100	+0%	1/30 Summer				37.311
1.007	S13	60 Winter	100	+0%					37.053
1.008	MH-29	60 Winter	100	+0%					36.712

PN	US/MH Name	Surcharged Depth (m)	Flooded Volume (m³)	Flow / Cap.	Overflow (l/s)	Pipe Flow (l/s)	Status	Level Exceeded
1.000	S01	0.480	0.000	0.56		44.1	SURCHARGED	
1.001	S02	0.634	0.000	1.17		79.5	SURCHARGED	
1.002	S03	0.590	0.000	1.62		114.7	SURCHARGED	
1.003	S04	0.291	0.000	1.03		77.4	SURCHARGED	

©1982-2019 Innovyze

100 year Return Period Summary of Critical Results by Maximum Level (Rank 1) for

PN	US/MH Name	Surcharged Depth (m)	Flooded Volume (m³)	Flow / Cap.	Overflow (l/s)	Pipe Flow (l/s)	Status	Level Exceeded
1.004	TANK 1	0.372	0.000	0.28		27.4	SURCHARGED	
1.005	S05	0.665	0.000	1.76		23.2	SURCHARGED	
1.006	S06	0.111	0.000	2.18		23.5	SURCHARGED	
1.007	S13	-0.307	0.000	0.09		23.5	OK	
1.008	MH-29	-0.368	0.000	0.08		23.5	OK	

©1982-2019 Innovyze

STORM SEWER DESIGN by the Modified Rational Method

Network Design Table for

« - Indicates pipe capacity < flow

PN	Length (m)	Fall (m)	Slope (1:X)	I.Area (ha)	T.E. (mins)	Base Flow (l/s)	k (mm)	n	HYD SECT	DIA (mm)	Section Type	Auto Design
1.000	44.900	0.225	200.0	0.113	5.00	0.0	0.305	0.010	o	300	Pipe/Conduit	
1.001	32.700	0.131	250.0	0.113	0.00	0.0	0.305	0.010	o	300	Pipe/Conduit	
1.002	53.900	0.216	249.5	0.113	0.00	0.0	0.305	0.010	o	300	Pipe/Conduit	
1.003	5.300	0.090	58.9	0.071	0.00	0.0	0.305	0.010	o	300	Pipe/Conduit	
1.004	20.350	0.183	111.2	0.000	0.00	0.0	0.305	0.010	o	300	Pipe/Conduit	
1.005	48.500	0.243	199.6	0.068	0.00	0.0	0.305	0.010	o	150	Pipe/Conduit	
1.006	4.437	0.022	201.7	0.000	0.00	0.0	0.122	0.010	o	150	Pipe/Conduit	
2.000	18.500	0.056	330.4	0.000	5.00	0.0	0.305	0.010	o	250	Pipe/Conduit	
3.000	59.000	0.393	150.1	0.324	5.00	0.0	0.122	0.010	o	225	Pipe/Conduit	
2.001	33.200	0.100	332.0	0.000	0.00	0.0	0.122	0.010	o	250	Pipe/Conduit	
4.000	68.000	0.453	150.0	0.324	5.00	0.0	0.305	0.010	o	225	Pipe/Conduit	
2.002	32.900	0.099	333.0	0.000	0.00	0.0	0.122	0.010	o	250	Pipe/Conduit	
2.003	42.835	0.129	333.0	0.324	0.00	0.0	0.122	0.010	o	250	Pipe/Conduit	
2.004	4.268	0.013	333.0	0.000	0.00	0.0	0.122	0.010	o	250	Pipe/Conduit	

Network Results Table

PN	Rain (mm/hr)	T.C. (mins)	US/IL (m)	Σ I.Area (ha)	Σ Base Flow (l/s)	Foul (l/s)	Add Flow (l/s)	Vel (m/s)	Cap (l/s)	Flow (l/s)
1.000	50.00	5.62	38.150	0.113	0.0	0.0	0.0	1.20	84.6	20.4
1.001	50.00	6.13	37.930	0.226	0.0	0.0	0.0	1.07	75.5	40.8
1.002	50.00	6.97	37.790	0.339	0.0	0.0	0.0	1.07	75.6	61.2
1.003	50.00	7.01	37.560	0.410	0.0	0.0	0.0	2.23	157.4	74.0
1.004	50.00	7.22	37.470	0.410	0.0	0.0	0.0	1.61	114.1	74.0
1.005	50.00	8.28	37.290	0.478	0.0	0.0	0.0	0.77	13.6«	86.3
1.006	50.00	8.37	37.050	0.478	0.0	0.0	0.0	0.83	14.7«	86.3
2.000	50.00	5.37	37.440	0.000	0.0	0.0	0.0	0.82	40.5	0.0
3.000	50.00	5.78	38.150	0.324	0.0	0.0	0.0	1.26	50.1«	58.5
2.001	50.00	6.40	37.380	0.324	0.0	0.0	0.0	0.89	43.8«	58.5
4.000	50.00	5.98	37.690	0.324	0.0	0.0	0.0	1.15	45.9«	58.5
2.002	50.00	7.02	37.285	0.648	0.0	0.0	0.0	0.89	43.7«	117.0
2.003	50.00	7.82	37.185	0.972	0.0	0.0	0.0	0.89	43.7«	175.5
2.004	50.00	7.90	37.059	0.972	0.0	0.0	0.0	0.89	43.7«	175.5

©1982-2019 Innovyze

STORM SEWER DESIGN by the Modified Rational Method

Network Design Table for

PN	Length (m)	Fall (m)	Slope (1:X)	I.Area (ha)	T.E. (mins)	Base Flow (l/s)	k (mm)	n	HYD SECT	DIA (mm)	Section Type	Auto Design
2.005	3.420	0.010	333.0	0.000	0.00	0.0	0.122	0.010	o	250	Pipe/Conduit	
1.007	22.130	0.221	100.1	0.000	0.00	0.0	0.122	0.010	o	450	Pipe/Conduit	
1.008	29.760	0.298	99.9	0.000	0.00	0.0	0.122	0.010	o	450	Pipe/Conduit	

Network Results Table

PN	Rain (mm/hr)	T.C. (mins)	US/IL (m)	Σ I.Area (ha)	Σ Base Flow (l/s)	Foul (l/s)	Add Flow (l/s)	Vel (m/s)	Cap (l/s)	Flow (l/s)
2.005	50.00	7.96	37.020	0.972	0.0	0.0	0.0	0.89	43.7«	175.5
1.007	50.00	8.52	36.910	1.450	0.0	0.0	0.0	2.40	381.2	261.8
1.008	50.00	8.73	36.630	1.450	0.0	0.0	0.0	2.40	381.7	261.8

©1982-2019 Innovyze

Manhole Schedules for

MH Name	MH CL (m)	MH Depth (m)	MH Connection	MH Diam.,L*W (mm)	PN	Pipe Out Invert Level (m)	Diameter (mm)	PN	Pipes In Invert Level (m)	Diameter (mm)	Backdr (mm)
S01	39.350	1.200	Open Manhole	1200	1.000	38.150	300				
S02	39.350	1.425	Open Manhole	1200	1.001	37.930	300	1.000	37.926	300	
S03	39.350	1.560	Open Manhole	1200	1.002	37.790	300	1.001	37.799	300	
S04	39.350	1.790	Open Manhole	1200	1.003	37.560	300	1.002	37.574	300	
TANK 1	39.350	1.880	Open Manhole	1200	1.004	37.470	300	1.003	37.470	300	
S05	39.350	2.063	Open Manhole	1200	1.005	37.290	150	1.004	37.287	300	
S06	38.890	1.843	Open Manhole	1200	1.006	37.050	150	1.005	37.047	150	
EXMH 2	39.500	2.060	Open Manhole	1200	2.000	37.440	250				
S09	39.500	1.350	Open Manhole	1200	3.000	38.150	225				
S10	39.500	2.120	Open Manhole	1200	2.001	37.380	250	2.000	37.384	250	
								3.000	37.757	225	
MH-30	39.500	1.810	Open Manhole	1200	4.000	37.690	225				
S11	39.500	2.263	Open Manhole	1200	2.002	37.285	250	2.001	37.280	250	
								4.000	37.237	225	
S12	39.500	2.315	Open Manhole	1200	2.003	37.185	250	2.002	37.186	250	
INTERCEPTOR	39.000	1.944	Open Manhole	1200	2.004	37.059	250	2.003	37.056	250	
TANK	39.000	1.980	Open Manhole	1200	2.005	37.020	250	2.004	37.046	250	
S13	39.000	2.090	Open Manhole	1350	1.007	36.910	450	1.006	37.028	150	
								2.005	37.010	250	
MH-29	38.890	2.260	Open Manhole	1350	1.008	36.630	450	1.007	36.689	450	
O-1	39.020	2.688	Open Manhole	225		OUTFALL		1.008	36.332	450	

No coordinates have been specified, layout information cannot be produced.

©1982-2019 Innovyze

PIPELINE SCHEDULES for

Upstream Manhole

PN	Hyd Sect	Diam (mm)	MH Name	C.Level (m)	I.Level (m)	D.Depth (m)	MH Connection	MH DIAM., L*W (mm)
1.000	o	300	S01	39.350	38.150	0.900	Open Manhole	1200
1.001	o	300	S02	39.350	37.930	1.120	Open Manhole	1200
1.002	o	300	S03	39.350	37.790	1.260	Open Manhole	1200
1.003	o	300	S04	39.350	37.560	1.490	Open Manhole	1200
1.004	o	300	TANK 1	39.350	37.470	1.580	Open Manhole	1200
1.005	o	150	S05	39.350	37.290	1.910	Open Manhole	1200
1.006	o	150	S06	38.890	37.050	1.690	Open Manhole	1200
2.000	o	250	EXMH 2	39.500	37.440	1.810	Open Manhole	1200
3.000	o	225	S09	39.500	38.150	1.125	Open Manhole	1200
2.001	o	250	S10	39.500	37.380	1.870	Open Manhole	1200
4.000	o	225	MH-30	39.500	37.690	1.585	Open Manhole	1200
2.002	o	250	S11	39.500	37.285	1.965	Open Manhole	1200
2.003	o	250	S12	39.500	37.185	2.065	Open Manhole	1200
2.004	o	250	INTERCEPTOR	39.000	37.059	1.691	Open Manhole	1200
2.005	o	250	TANK	39.000	37.020	1.730	Open Manhole	1200

Downstream Manhole

PN	Length (m)	Slope (1:X)	MH Name	C.Level (m)	I.Level (m)	D.Depth (m)	MH Connection	MH DIAM., L*W (mm)
1.000	44.900	200.0	S02	39.350	37.926	1.125	Open Manhole	1200
1.001	32.700	250.0	S03	39.350	37.799	1.251	Open Manhole	1200
1.002	53.900	249.5	S04	39.350	37.574	1.476	Open Manhole	1200
1.003	5.300	58.9	TANK 1	39.350	37.470	1.580	Open Manhole	1200
1.004	20.350	111.2	S05	39.350	37.287	1.763	Open Manhole	1200
1.005	48.500	199.6	S06	38.890	37.047	1.693	Open Manhole	1200
1.006	4.437	201.7	S13	39.000	37.028	1.822	Open Manhole	1350
2.000	18.500	330.4	S10	39.500	37.384	1.866	Open Manhole	1200
3.000	59.000	150.1	S10	39.500	37.757	1.518	Open Manhole	1200
2.001	33.200	332.0	S11	39.500	37.280	1.970	Open Manhole	1200
4.000	68.000	150.0	S11	39.500	37.237	2.038	Open Manhole	1200
2.002	32.900	333.0	S12	39.500	37.186	2.064	Open Manhole	1200
2.003	42.835	333.0	INTERCEPTOR	39.000	37.056	1.694	Open Manhole	1200
2.004	4.268	333.0	TANK	39.000	37.046	1.704	Open Manhole	1200
2.005	3.420	333.0	S13	39.000	37.010	1.740	Open Manhole	1350

©1982-2019 Innovyze

PIPELINE SCHEDULES for

Upstream Manhole

PN	Hyd Sect	Diam (mm)	MH Name	C.Level (m)	I.Level (m)	D.Depth (m)	MH Connection	MH DIAM., L*W (mm)
1.007	o	450	S13	39.000	36.910	1.640	Open Manhole	1350
1.008	o	450	MH-29	38.890	36.630	1.810	Open Manhole	1350

Downstream Manhole

PN	Length (m)	Slope (1:X)	MH Name	C.Level (m)	I.Level (m)	D.Depth (m)	MH Connection	MH DIAM., L*W (mm)
1.007	22.130	100.1	MH-29	38.890	36.689	1.751	Open Manhole	1350
1.008	29.760	99.9	O-1	39.020	36.332	2.238	Open Manhole	225

Free Flowing Outfall Details for

Outfall Pipe Number	Outfall Name	C. Level (m)	I. Level (m)	Min I. Level (m)	D,L (mm)	W (mm)
1.008	O-1	39.020	36.332	36.452	225	0

Simulation Criteria for

Volumetric Runoff Coeff	1.000	Additional Flow - % of Total Flow	0.000
Areal Reduction Factor	1.000	MADD Factor * 10m³/ha Storage	2.000
Hot Start (mins)	0	Inlet Coeffiecient	0.800
Hot Start Level (mm)	0	Flow per Person per Day (l/per/day)	0.000
Manhole Headloss Coeff (Global)	0.500	Run Time (mins)	60
Foul Sewage per hectare (l/s)	0.000	Output Interval (mins)	1

Number of Input Hydrographs	0	Number of Storage Structures	2
Number of Online Controls	2	Number of Time/Area Diagrams	0
Number of Offline Controls	0	Number of Real Time Controls	0

Synthetic Rainfall Details

Rainfall Model	FSR	Profile Type	Summer
Return Period (years)	100	Cv (Summer)	1.000
Region	England and Wales	Cv (Winter)	0.840
M5-60 (mm)	18.700	Storm Duration (mins)	30
Ratio R	0.400		

©1982-2019 Innovyze

Online Controls for

Orifice Manhole: TANK 1, DS/PN: 1.004, Volume (m³): 2.4

Diameter (m) 0.225 Discharge Coefficient 0.600 Invert Level (m) 37.470

Orifice Manhole: S13, DS/PN: 1.007, Volume (m³): 3.2

Diameter (m) 0.050 Discharge Coefficient 0.600 Invert Level (m) 36.910

©1982-2019 Innovyze

Storage Structures for

Cellular Storage Manhole: TANK 1, DS/PN: 1.004

Invert Level (m) 37.384 Safety Factor 2.0
Infiltration Coefficient Base (m/hr) 0.00000 Porosity 0.90
Infiltration Coefficient Side (m/hr) 0.00000

Depth (m)	Area (m²)	Inf. Area (m²)	Depth (m)	Area (m²)	Inf. Area (m²)
0.000	150.0	150.0	1.300	0.0	234.0
1.200	150.0	234.0			

Cellular Storage Manhole: TANK, DS/PN: 2.005

Invert Level (m) 36.720 Safety Factor 2.0
Infiltration Coefficient Base (m/hr) 0.00000 Porosity 0.90
Infiltration Coefficient Side (m/hr) 0.00000

Depth (m)	Area (m²)	Inf. Area (m²)	Depth (m)	Area (m²)	Inf. Area (m²)
0.000	600.0	600.0	0.900	0.0	680.0
0.800	600.0	680.0			

©1982-2019 Innovyze

Summary of Critical Results by Maximum Flood Volume (Rank 1) for

Simulation Criteria

Areal Reduction Factor 1.000 Additional Flow - % of Total Flow 0.000
Hot Start (mins) 0 MADD Factor * 10m³/ha Storage 2.000
Hot Start Level (mm) 0 Inlet Coeffiecient 0.800
Manhole Headloss Coeff (Global) 0.500 Flow per Person per Day (l/per/day) 0.000
Foul Sewage per hectare (l/s) 0.000

Number of Input Hydrographs 0 Number of Storage Structures 2
Number of Online Controls 2 Number of Time/Area Diagrams 0
Number of Offline Controls 0 Number of Real Time Controls 0

Synthetic Rainfall Details

Rainfall Model FSR Ratio R 0.400
Return Period (years) 100 Cv (Summer) 1.000
Region England and Wales Cv (Winter) 0.840
M5-60 (mm) 18.700

Margin for Flood Risk Warning (mm) 300.0 DVD Status OFF
Analysis Timestep Fine Inertia Status OFF
DTS Status ON

Profile(s) Summer and Winter
Duration(s) (mins) 15, 30, 60, 120, 180, 240, 360, 480, 600, 720, 960, 1440, 2160, 2880, 4320, 5760, 7200, 8640, 10080
Sensitivity flows(s) (%) 0, +40

PN	US/MH Name	Storm	Climate Change	First (X) Surcharge	First (Y) Flood	First (Z) Overflow	Overflow Act.
1.000	S01	15 Summer	+40%	+0%/15 Summer	+40%/15 Summer		
1.001	S02	960 Summer	+40%	+0%/15 Summer	+40%/15 Summer		
1.002	S03	960 Summer	+40%	+0%/15 Summer	+40%/120 Summer		
1.003	S04	1440 Summer	+40%	+0%/15 Summer	+40%/180 Summer		
1.004	TANK 1	2160 Winter	+40%	+0%/15 Summer	+0%/1440 Summer		
1.005	S05	2160 Winter	+40%	+0%/15 Summer	+0%/1440 Summer		
1.006	S06	2880 Summer	+40%	+0%/15 Summer	+0%/180 Summer		
2.000	EXMH 2	30 Summer	+40%	+0%/15 Summer	+0%/15 Summer		
3.000	S09	60 Summer	+40%	+0%/15 Summer	+0%/15 Summer		
2.001	S10	30 Summer	+40%	+0%/15 Summer	+0%/15 Summer		
4.000	MH-30	30 Summer	+40%	+0%/15 Summer	+0%/15 Summer		
2.002	S11	30 Summer	+40%	+0%/15 Summer	+0%/15 Summer		
2.003	S12	15 Summer	+40%	+0%/15 Summer	+0%/15 Summer		
2.004	INTERCEPTOR	2880 Summer	+40%	+0%/15 Summer	+0%/360 Summer		
2.005	TANK	2880 Summer	+40%	+0%/30 Summer	+0%/360 Summer		
1.007	S13	2880 Summer	+40%	+0%/30 Summer	+0%/360 Summer		
1.008	MH-29	2160 Winter	+0%				

©1982-2019 Innovyze

Summary of Critical Results by Maximum Flood Volume (Rank 1) for

PN	US/MH Name	Water Level (m)	Surcharged Depth (m)	Flooded Volume (m³)	Flow / Cap.	Overflow (l/s)	Pipe Flow (l/s)	Status	Level Exceeded
1.000	S01	39.365	0.915	15.808	1.11		87.0	FLOOD	16
1.001	S02	39.361	1.131	11.011	0.17		11.5	FLOOD	14
1.002	S03	39.353	1.263	3.822	0.25		17.9	FLOOD	10
1.003	S04	39.351	1.491	1.111	0.18		13.5	FLOOD	9
1.004	TANK 1	39.124	1.354	1.404	0.08		7.6	FLOOD	8
1.005	S05	39.102	1.662	1.206	0.67		8.8	FLOOD	2
1.006	S06	39.120	1.920	230.106	1.47		15.8	FLOOD	53
2.000	EXMH 2	39.501	1.811	1.269	0.58		20.4	FLOOD	13
3.000	S09	39.587	1.212	86.696	1.01		48.0	FLOOD	25
2.001	S10	39.510	1.880	9.871	1.48		58.7	FLOOD	14
4.000	MH-30	39.586	1.671	86.129	1.15		51.1	FLOOD	25
2.002	S11	39.509	1.974	9.344	2.55		101.3	FLOOD	10
2.003	S12	39.522	2.087	21.839	3.58		145.1	FLOOD	8
2.004	INTERCEPTOR	39.121	1.812	120.714	0.66		22.4	FLOOD	47
2.005	TANK	39.118	1.848	118.002	0.50		17.5	FLOOD	50
1.007	S13	39.116	1.756	115.681	0.03		7.7	FLOOD	50
1.008	MH-29	36.677	-0.403	0.000	0.02		7.4	OK	

©1982-2019 Innovyze

APPENDIX C

Technical Specification

Control Point	Head (m)	Flow (l/s)
Primary Design	1.200	124.500
Flush-Flo™	0.482	124.499
Kick-Flo®	0.879	107.070
Mean Flow		94.769

Hydro-Brake® Optimum Flow Control including:

- 5 mm grade 304L stainless steel
- Integral stainless steel pivoting by-pass door allowing clear line of sight through to outlet, c/w stainless steel operating rope
- Beed blasted finish to maximise corrosion resistance
- Stainless steel fixings
- Rubber gasket to seal outlet

BBA APPROVAL INSPECTION TESTING CERTIFICATION
CERTIFICATE 08/4596

WRc Approved
PT/329/0412

hydro-int.com/patents

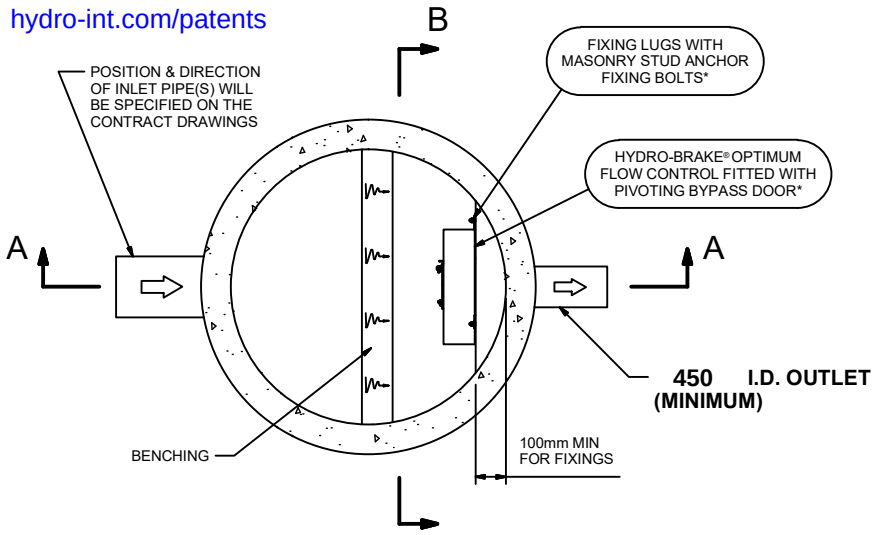

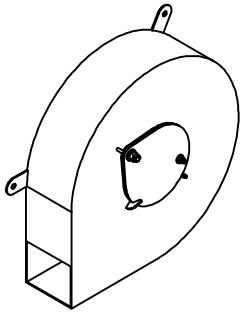

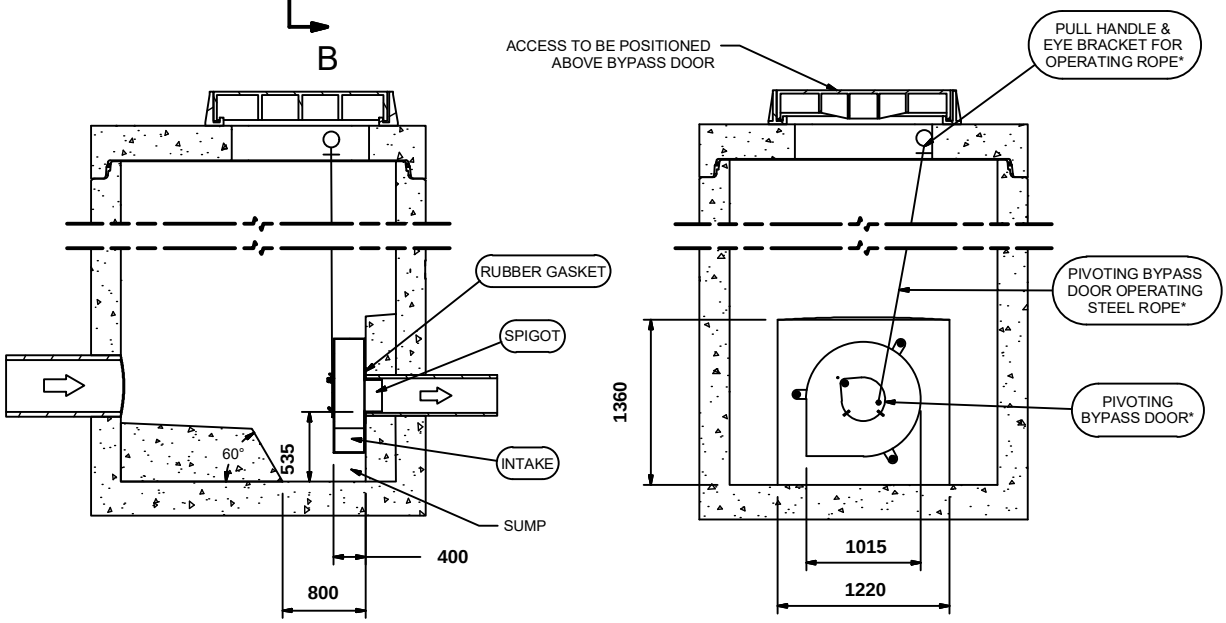

SECTION A-A

SECTION B-B

IMPORTANT: ⬭ LIMIT OF HYDRO INTERNATIONAL SUPPLY
THE DEVICE WILL BE HANDED TO SUIT SITE CONDITIONS
FOR SITE SPECIFIC DETAILS AND MINIMUM CHAMBER SIZE REFER TO HYDRO INTERNATIONAL
ALL CIVIL AND INSTALLATION WORK BY OTHERS
* WHERE SUPPLIED
HYDRO-BRAKE® FLOW CONTROL & HYDRO-BRAKE® OPTIMUM FLOW CONTROL ARE REGISTERED TRADEMARKS FOR FLOW CONTROLS DESIGNED AND MANUFACTURED EXCLUSIVELY BY HYDRO INTERNATIONAL

THIS DESIGN LAYOUT IS FOR ILLUSTRATIVE PURPOSES ONLY. NOT TO SCALE.

DESIGN ADVICE !

The head/flow characteristics of this SCL-0392-1245-1200-1245 Hydro-Brake® Optimum Flow Control are unique. Dynamic hydraulic modelling evaluates the full head/flow characteristic curve.
The use of any other flow control will invalidate any design based on this data and could constitute a flood risk.

Hydro International®

DATE	7/30/2021 12:38 PM
SITE	Rivermead
DESIGNER	Siobh Mullan
REF	Rivermead

SCL-0392-1245-1200-1245
Hydro-Brake® Optimum

© 2021 Hydro International Ltd, Shearwater House, Clevedon Hall Estate, Victoria Road, Clevedon, BS21 7RD. Tel; 01275 878371 Fax; 01275 874979 Web; www.hydro-int.com Email; enquiries@hydro-int.com

Technical Specification

Control Point	Head (m)	Flow (l/s)
Primary Design	1.200	124.500
Flush-Flo	0.482	124.499
Kick-Flo®	0.879	107.070
Mean Flow		94.769

BBA APPROVAL INSPECTION TESTING CERTIFICATION
CERTIFICATE No 08/4596

WRc APPROVED
PT/329/0412

hydro-int.com/patents

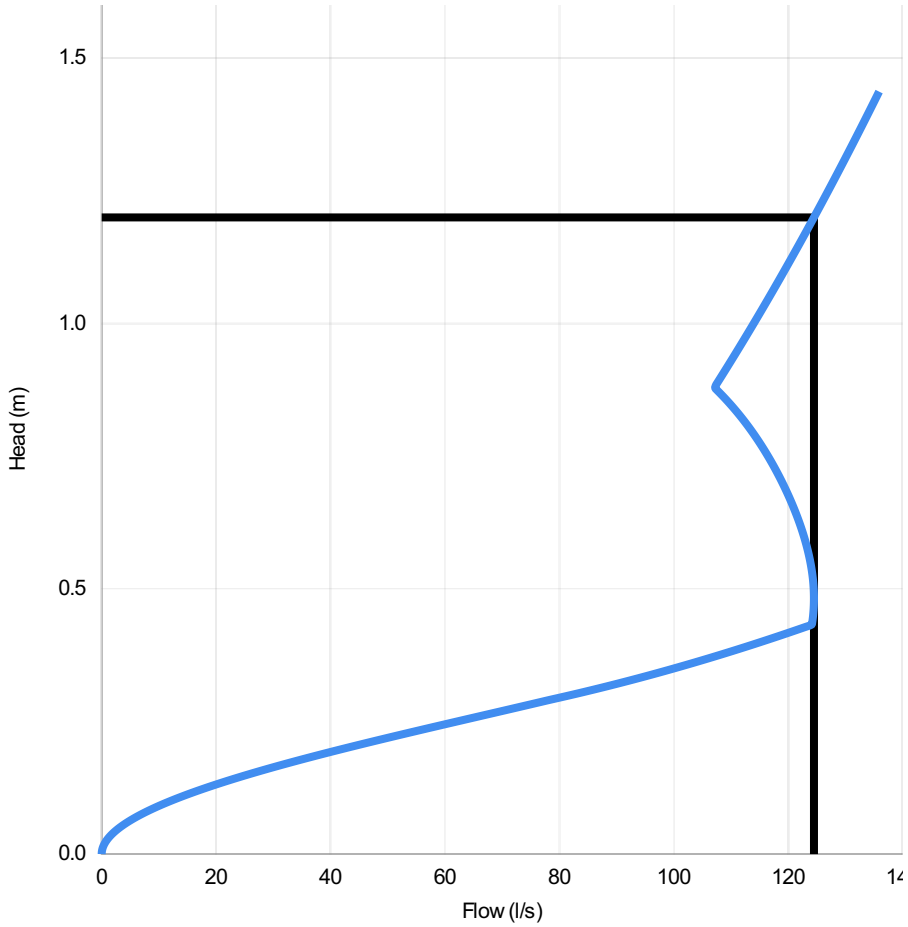

Head (m)	Flow (l/s)
0.000	0.000
0.041	2.166
0.083	8.353
0.124	18.024
0.166	30.576
0.207	45.316
0.248	61.425
0.290	77.891
0.331	93.627
0.372	107.122
0.414	119.116
0.455	124.395
0.497	124.469
0.538	124.070
0.579	123.255
0.621	122.081
0.662	120.594
0.703	118.816
0.745	116.742
0.786	114.325
0.828	111.474
0.869	108.054
0.910	108.893
0.952	111.262
0.993	113.579
1.034	115.848
1.076	118.072
1.117	120.252
1.159	122.392
1.200	124.493

DESIGN ADVICE

The head/flow characteristics of this SCL-0392-1245-1200-1245 Hydro-Brake Optimum® Flow Control are unique. Dynamic hydraulic modelling evaluates the full head/flow characteristic curve.

! **The use of any other flow control will invalidate any design based on this data and could constitute a flood risk.**

Hydro International®

DATE	30/07/2021 12:38
Site	Rivermead
DESIGNER	Siobh Mullan
Ref	Rivermead

SCL-0392-1245-1200-1245

Hydro-Brake Optimum®

© 2018 Hydro International, Shearwater House, Clevedon Hall Estate, Victoria Road, Clevedon, BS21 7RD. Tel 01275 878371 Fax 01275 874979 Web www.hydro-int.com Email designtools@hydro-int.com

APPENDIX D

Polystorm-R Modular Cell

Data Sheet

Product code: PSM1A

The Polystorm-R modular cell is ideally suited for loaded applications at greater depths, such as housing, commercial and infrastructure projects and has a compressive strength of up to 61 tonnes/m². It offers all the proven performance of the Polystorm cell, with the added benefits of being manufactured from over 90% recycled material content.

Wherever performance criteria and standards allow, we will always maximise the sustainability of our products by using post consumer plastics in their manufacture. By sourcing and carefully controlling the quality of the recycled material we use our precision injection moulding. Therefore we are able to guarantee consistent quality in our recycled plastic, giving you the confidence and the performance levels you expect from the market leader.

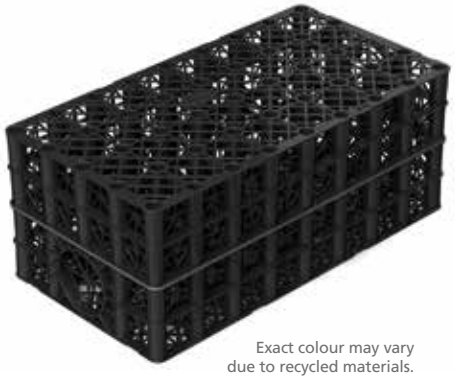

Exact colour may vary due to recycled materials.

Key Benefits

- Made from specially selected and controlled recycled materials
- Environmentally friendly, sustainable solution
- Has undergone stringent testing to ensure product performance
- Compressive strength of 61 tonnes/m²
- Ideal for retention, attenuation and infiltration applications with a suitable geomembrane or geotextile
- BBA approved
- Allow flexibility of shape - ideal for shallow excavation systems, narrow strips or use in restricted areas
- Can be used as part of a value engineered hybrid system with Polystorm, Polystorm Lite and Polystorm Xtra
- Integrated inlet and outlet
- 3D flow throughout the structure
- 95% void ratio
- Light weight yet robust - excellent Health and Safety and installation benefits
- 60 years creep limited life expectancy

Technical Support

Detailed guidance and assistance is available.
For further information, please contact our Technical Team on **+44 (0) 1509 615100** or email **civils@polypipe.com**

BBA BRITISH BOARD OF AGREMENT
CERTIFICATE No. 06/4297

ELEMENT	VALUE
PHYSICAL PROPERTIES	
Length	1m
Width	0.5m
Depth	0.4m
Total volume	0.2m³
Unit weight	9kg (approx)
Unit storage volume	0.19m³ (190 litres)
Void ratio	95%
SHORT TERM COMPRESSIVE STRENGTH	
Vertical	610 kN/m² **
Lateral	63 kN/m² **
SHORT TERM DEFLECTION	
Short-term vertical deflection	60 kN/m² per mm
LONG TERM DEFLECTION	
Estimated long term vertical deflection (creep)	0.2798 Ln (design life in hrs) +0.485 [Based on an applied test load = 162 kN/m²] Creep data limit 60 years
Estimated long term lateral deflection (creep)	1.0192 Ln (design life in hrs) -3.864 [Based on an applied test load = 30.8 kN/m²] Creep data limit 60 years

Note: Polystorm-R is ideal for use in trafficked and pedestrian applications subject to a structural design check and suitable installation conditions

* Each unit includes 4 Clips and 2 Shear Connectors.

** Compressive strength at yield, maximum recommended value for design purposes.

Polypipe Civils
Charnwood Business Park, Loughborough, Leicestershire LE11 1LE
Tel: +44 (0) 1509 615100 Fax: +44 (0) 1509 610215 Email: civils@polypipe.com
www.polypipe.com/wms

Polypipe

RECOMMENDED MAXIMUM DEPTH OF INSTALLATION (to cell invert) [m]

TYPICAL SOIL TYPE	TYPICAL ANGLE OF SHEAR RESISTANCE	SOIL WEIGHT kN/m³	WITHOUT GROUNDWATER (below base of cells) NORMAL CASE		WITH GROUNDWATER AT 1M BELOW GROUND LEVEL AND UNITS WRAPPED IN GEOMEMBRANE	
			Pedestrian	Trafficked (cars) <3000kg GVW	Pedestrian	Trafficked (cars) <3000kg GVW
Stiff over consolidated clay e.g. London clay	24	20.0	2.2	1.9	1.8	1.6
Normally consolidated silty sandy clay e.g. alluvium, made ground	26	19.0	2.4	2.2	1.9	1.7
Loose sand and gravel	30	18.0	3.0	2.7	2.0	1.9
Medium dense sand and gravel	33	19.0	3.2	2.9	2.0	1.9
Dense sand and gravel	38	20.0	3.7	3.5	2.1	2.0

Note:
1) Stated depths based on the calculation methodology detailed within CIRIA C680 (2008)
2) Assuming water density = 10.0kN/m³
3) Assumed ultimate limit state (ULS) partial factor of safety applied to: Material = 2.75 Lateral pressure = 1.35

Durability

The polymer material used in the manufacture of the Polystorm-R unit has an adequate resistance to attack from the type and quantities of chemicals that may be expected to naturally occur in uncontaminated soils and rainwater runoff. When installed in accordance with our recommendations, it is expected that the Polystorm-R unit will have a design life in excess of 60 years*. The installer of a proposed geocellular structure should ensure that an appropriate design check has been undertaken, in accordance with the recommended methodology and factors of safety given in CIRIA C680 (2008), Structural Design of Modular Geocellular Drainage Tanks, prior to the commencement of construction activities.

* Derived from long term extrapolated creep testing

Notes

1. Unless stated, all values are nominal and may vary within normal production tolerances.
2. The characteristic unit parameters stated have been based on Polypipe BBA certificate N° 06/4297, sheet 3.
3. Polypipe reserve the right to change product specifications without prior notice.
4. This document is uncontrolled and updates will not be issued automatically.

RECOMMENDED MINIMUM COVER LEVELS [m]

LIVE LOAD CONDITIONS	PEDESTRIAN	LIGHT TRAFFICKED	
		Car park with vehicle mass <GVW	
Minimum cover depth required (m)	0.50	<3000kg 0.50	<9000kg 0.65

Note
1) Stated depths based on the calculation methodology detailed within CIRIA C680 (2008)
2) Assumed serviceability limit state (SLS) partial factor of safety applied to: Material = 1.5 Live load = 1.0 Dead load = 1.0
3) Shallower minimum burial depths may be applicable subject to an assessment of the specific site conditions. For further details please consult our Technical Team on 01509 615100.

All descriptions and illustrations in this publication are intended for guidance only and shall not constitute a 'sale by description'. All dimensions given are nominal and Polypipe may modify and change the information, products and specifications from time to time for a variety of reasons, without prior notice. The information in this publication is provided 'as is' on September 2017. Updates will not be issued automatically. This information is not intended to have any legal effect, whether by way of advice, representation or warranty (express or implied). We accept no liability whatsoever (to the extent permitted by law) if you place any reliance on this publication you must do so at your own risk. All rights reserved. Copyright in this publication belongs to Polypipe and all such copyright may not be used, sold, copied or reproduced in whole or part in any manner in any media to any person without prior consent. Polypipe is a registered trademark of Polypipe. All Polypipe products are protected by Design Right under CDPA 1988. Copyright © 2016 Polypipe. All rights reserved.

Polypipe Civils
Charnwood Business Park, Loughborough, Leicestershire LE11 1LE
Tel: +44 (0) 1509 615100 Fax: +44 (0) 1509 610215 Email: civils@polypipe.com
www.polypipe.com/wms

Polypipe