Eve™

Model 2017 (2.0)

Manual / Handboek / Handbuch / Manuel

ALFEN
POWER TO ADAPT

OUTSIDE / BUITENZIJDE / AUSSENSEITE / EXTÉRIEUR

INSIDE / BINNENZIJDE / INNENSEITE / INTÉRIEUR

ENGLISH

Step-by-step Eve installation and commissioning

Congratulations with your new Alfen charging station for electric vehicles, and thank you for your purchase.

To ensure a safe installation process and to fully utilise all advanced features of your new system, we advise you to read this manual carefully. Properly store this manual for future usage.

We have invested a great amount of care to provide you with a complete and comprehensible manual. As we continue to modify and further improve its contents, please refer to the following link to download the most recent version: http://alfen.com/en/icu-eve.

ENGLISH

TABLE OF CONTENTS

1	**Safety and usage instructions**	**7**
1.1	Purpose and intended audience	7
1.2	General safety	7
2	**Product**	**8**
2.1	The charging station	8
2.2	Status indications on the display	8
2.3	Operating the charging station	9
2.4	Technical specifications	9
2.4.1	Eve 2017 model overview	10
2.4.2	Input / electricity grid connection	11
2.4.3	Output / vehicle connection	11
2.4.4	Protection / integrated components	11
2.4.5	Charging and access	12
2.4.6	Operating conditions	12
2.4.7	Casing	12
2.5	Optional factory settings	13
2.6	Accessories	13
3	**Installing and connecting**	**14**
3.1	Installing and connecting	14
3.2	Assembly and installation requirements	14
3.3	Mechanical installation	14
3.4	Electrical installation	16
4	**Commissioning the charging station**	**18**
4.1	Safety instructions prior to usage	18
4.2	Commissioning	18
5	**Connectivity**	**19**
5.1	Administration systems	19
5.2	Establishing a connection	19
5.2.1	Wireless connection	19
5.2.2	UTP (Ethernet) connection	19
5.3	Registering your ICU EZ account	20
5.4	Registering your charging station within your own administration system	28

Appendices

Appendix 1: Error codes and problem solving	21
Appendix 2: Default configuration of optional factory settings	22

DECLARATION OF CONFORMITY

Manufacturer information:
Alfen ICU B.V.
Hefbrugweg 28
1332 AP Almere
The Netherlands

Declares the conformity of the product:
Charging stations of the type Alfen Eve

Pursuant to European directives:
Low Voltage Directive 2014/35/EU
EMC Directive 2014/30/EU

Applied (harmonised standards)
- NEN-EN-IEC 61851-1
- NEN-EN-IEC 61851-22
- NF-EN-IEC 61851-1
- NF-EN-IEC 61851-22
- DIN EN 61851-1
- DIN EN 61851-22
- BS EN 61851-1
- BS EN 61851-22
- CEI EN 61851-1
- CEI EN 61851-22

All mentioned products are labelled with the CE mark.

Almere, The Netherlands, 3 juli 2017

M. Roeleveld, Msc.

1.1 Purpose and intended audience

The Alfen Eve charging station is intended exclusively for charging electric vehicles without requiring a separate grid connection (home/domestic connection). To assure proper usage of the charging station, the instructions in this manual must always be complied with.

Installing, commissioning and maintaining this installation may only be performed by a qualified electrician (Alfen ICU certified partner). This qualified technician must meet the following requirements:

- Expertise of all relevant general and specific rules regarding safety and incident prevention.
- Awareness of the applicable regulations regarding electricity.
- The ability to identify risks and avoid potential hazards.
- Awareness of these installation and operation instructions.

This manual applies to the product Alfen Eve Model 2017 (2.0), equipped with firmware version 3.2 or higher.

1.2 General safety

DANGER!

The safety instructions are intended to ensure proper practical usage. If you do not comply with these safety regulations and instructions, you may expose yourself to the risk of electric shock, fire and/or severe injuries.

Using this product is expressly prohibited in the following situations:

- In the vicinity of explosive or highly flammable substances.
- If the product is located in or close to water.
- If the product is or individual components are damaged.
- Usage by children or individuals not properly able to assess the risks associated with using this product.

In the following cases, Alfen ICU B.V. shall not be liable in any possible way for any kind of damages while all warranties on the product and its accessories become void:

- Non-compliance with these installation and operation instructions.
- Improper use.
- Improper handling.
- Installation and/or usage by unqualified staff.
- Independently applied expansions to or modifications of the product.
- Usage of replacement parts not manufactured or approved by Alfen.
- Ambient temperatures below -30 °C or above 40 °C.
- Force majeure.

More extensive safety information is available in the relevant sections of this document.

2. PRODUCT

ENGLISH

2.1 The charging station

Pages 2 and 3 of this manual contain corresponding images of the charging station. This section provides more information about the content of the product and how use it to charge your vehicle.

The charging station (outside, ref. page 2)

1. Charging station identification number
2. Colour display
3. RFID card reader and authorisation indicator
4. Type 2 plug connection
5. Cable gland(s) for power cable(s), entry
6. Grommets for outgoing cables
7. Port for Service Installer/ UTP cable
8. Identification label

The charging station (inside, ref. page 3)

9. Threaded holes for wall mounting
10. SIM card holder (ref. image 7 for detailed location)
11. UTP (Ethernet) connection
12. Connector P1 port
13. Connector for the display
14. On/off switch (4 pole (model 904461002: 8-pole)

Identification label

The identification label 8 specifies the model, production date and serial number. This label is located on the bottom of your charging station. Please have your serial number available while contacting Alfen to enable quicker support.

2.2 Display status indications

The Alfen Eve is equipped with a colour display to visualise the status of the charging station and inform the user about the charging progress.

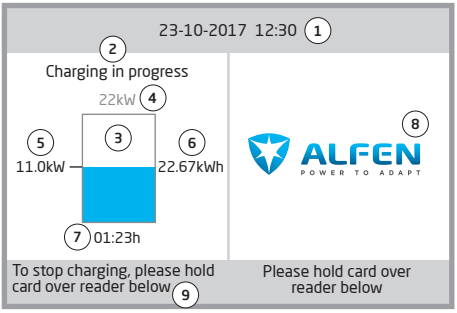

Image 1: Eve display during charging (on the left).

General charging station information

1. Date and time: automatically configured by your administration system, or during installation with the ICU Installer. If no date and time are entered, this field remains invisible.

Status and information screen

The charging station informs the user about its actual status and provides feedback on input and actions. The following information is available:

2. Status information
3. Status indicator, options

Charge card accepted, cable connected

Communicating with vehicle or charging completed

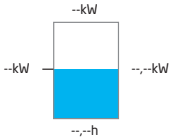

Charging

Error

4. Maximum charging capacity of the socket
5. Current charging capacity for the connected vehicle
6. Currently consumed energy during the current transaction
7. Duration of the current transaction
8. Logo: shown across the entire width of the display if both sockets are available, or smaller on the available side if one socket is being used.

Instruction box

9. User instructions for each user are shown here. In case of an error, an error code is shown (ref. Appendix 1 for more information).

2.3 Operating the charging station

Plug & Charge – No charge card authorisation required

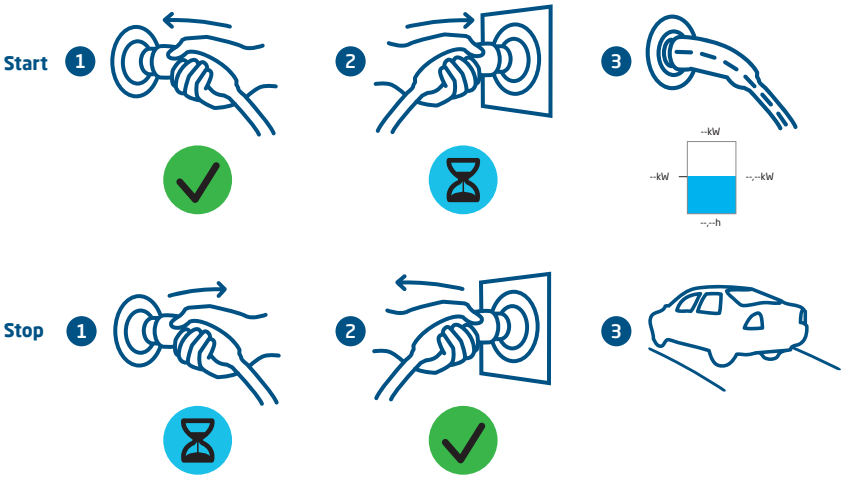

RFID – Charging station with user authorisation

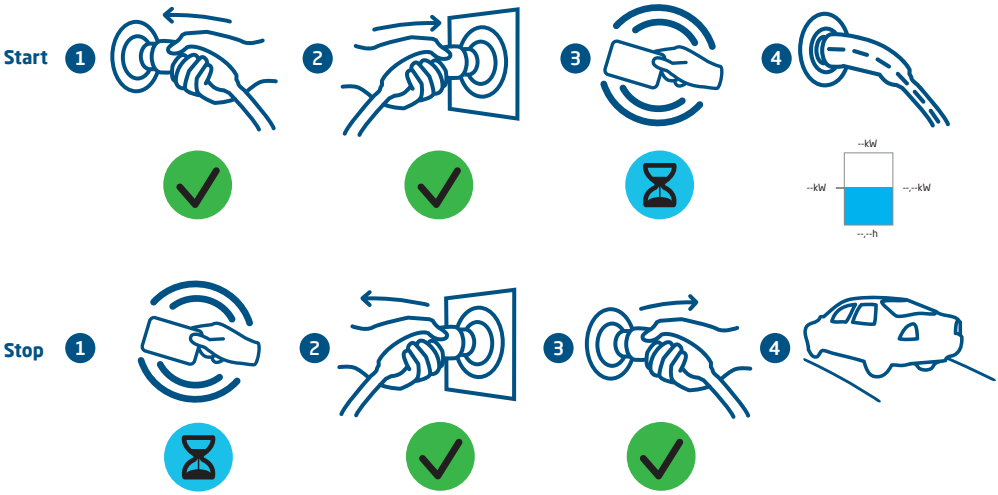

ENGLISH

2.4 Technical specifications Eve model 2017

2.4.1 Eve 2017 model overview

Models

Model name	Article no.	OCPP chargePointModel
2 x type 2 socket, 1-phase, max. 1x32A input current, RCD type A, 6mA detection, Display	904461011	NG920-61011
2 x type 2 socket, 1-phase, max. 2x32A input current, RCD type A, 6mA detection, Display	904461012	NG920-61012
2 x type 2 socket, 3-phase, max. 1x32A input current, RCD type A, 6mA detection, Display	904461001	NG920-61001
2 x type 2 socket, 3-phase, max. 2x32A input current, RCD type A, 6mA detection, Display	904461002	NG920-61002

System structure Eve model 2017

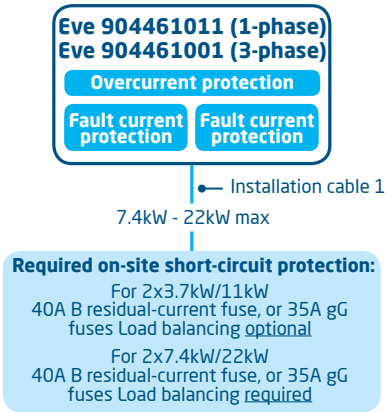

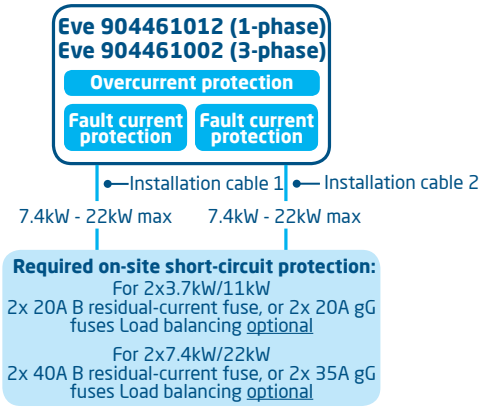

2.4.2 Input / power supply

NOTICE!

Your installation must comply with the standards and regulations of the location (country) where it is located. The tables below are advisory and based on proper practical functioning of the charging stations; provided that all prerequisites are satisfied.

Printing errors expressly reserved

Input: minimum advised cable diameters (based on assumed max. 50m cable length)	**1-phase 3,7kW charging, 16A selected per phase** 904461011: 3 x 4 mm^2 904461012: 3 x 4 mm^2 (per cable) **3-phase 11kW charging, 16A selected per phase** 904461001: 5 x 4 mm^2 904461002: 5 x 4 mm^2 (per cable) **1-phase 7.4kW charging, 32A selected per phase** 904461011: 3 x 6mm^2 904461012: 3 x 6 mm^2 (per cable) **3-phase 22kW charging, 32A selected per phase** 904461001: 5 x 6 mm^2 904461002: 5 x 6 mm^2 (per cable)
Nominal current	230 V (904461011, 904461012), 400 V (904461001, 904461002)
Protection	Single power supply, 1-phase: 1 x 40 A max 2P Double power supply, 1-phase: 2 x 40 A max 2P Single power supply, 3-phase: 1 x 40 A max 4P Double power supply, 3-phase: 2 x 40 A max 4P If you selected no more than 16A (3.7kW or 11kW charging), 20A will suffice instead of 40A max
Nominal frequency	50 Hz
Connection terminals	Cable gland, range for cable thicknesses 17mm – 25.5mm Cable clamp range: max. 16 mm2 per wire
Grounding	TN system (PE wire) TT system (independently installed ground electrode)
Main switch	4-pole, 80 A, 400 V (904461001, 904461011, 904461012) 8-pole, 40 A, 400 V (904461002)

2.4.3 Output / vehicle connection

Vehicle connection	2 x type 2 socket, compliant with IEC62196-2
Output voltage	230 V (904461011, 904461012), 400 V (904461001, 904461002)
Max. charging current	16 A per phase, 32 A per phase (optional)
Max. output	7,4 kW per socket (904461011, 904461012), 22 kW per socket (904461001, 904461002)
Load balancing	Optional. Required for charging current exceeding 16 A per phase (904461011, 904461001)

2.4.4 Protection / integrated components

Residual current protection	Type A 30mA, per socket DC current detection 6mA, per socket
Energy meter	1x kWh meter per socket, MID certified
Power switching relay	Integrated, simultaneous activation
Overcurrent protection	Integrated in firmware; shutdown at: 105% after 1,000 seconds; 110% after 100 seconds; 120% after 10 seconds; 150% after 2 seconds

ENGLISH

2.4.5 Charging and access

Controllers	Central unit for sockets and communication
Communication with vehicle	Mode 3
Status indication	Integrated in display
Display	7" TFT colour display, resolution: 800x480 pixel
Card reader	DESFire
Internet / Networking capabilities	GPRS, Ethernet/ LAN (externally accessible)
Communication protocol	OCPP 1.5 (JSON), OCPP 1.6 (JSON)
Back-end connection	ICU Connect (optional) or other back-end system (upon request)
Communication with Smart Meter	DSMR 4.0 and higher via P1 port (RJ11/RJ12)

2.4.6 Operating conditions

Operating temperature	-30°C up to 40°C
Relative humidity	5 % up to 95 %
Protection class	I
Protection class (casing)	IP54
IK protection	IK10
Stand-by consumption	Approx. 9 - 12W

NOTICE!

The operating temperature assumes the **ambient temperature** of a product delivered in the standard casing colour RAL9016. Direct exposure to sunlight may have an adverse effect on the temperature range.

The temperatures mentioned above apply for the ambient temperature of the product, assuming the standard colour of the casing: RAL9016. Other (darker) colours may have an adverse effect on the product. If the product is exposed to lower or higher temperatures, continuous operation cannot be guaranteed. If temperatures exceed the maximum values, the charging station will automatically decrease the charging current to stabilize the internal temperature. This prevents unexpected interruptions during transactions.

If the product is directly exposed to sunlight, the automated temperature management may automatically start below the maximum ambient temperature.

2.4.7 Casing

Type	Wall-mounted unit
Mounting options	Wall mounting or mounting post (accessory)
Material (cover)	Fibre-reinforced polyester (Sheet Moulding Compound - SMC)
Colour (cover)	RAL 9016 (Traffic white)
Material (rear)	Fibre-reinforced polyester (Sheet Moulding Compound - SMC)
Colour (rear)	RAL 7043 (Traffic grey B)
Locking	Anti-theft screws
Dimensions (H x W x D)	
Casing	590 x 338 x 230 mm
Product packaging	740 x 350 x 250 mm
Weight	
Casing	Approx. 25 kg
Packaging	Approx. 31 kg

2.5 Optional factory settings

Factory settings	Options
Authorisation	Plug & Charge RFID *
Maximum available charging current per socket	16A 32A *
Smart charging options	Off Standard load balancing * Active load balancing (P1) *
Own logo shown on colour display	Off (Alfen logo) On (Your own logo) *
Supported languages	English Dutch German French
User availability if temporarily offline	Accepts all RFID cards Only valid cards registered in the database Not available
Action if vehicle plug is disconnected	Terminate transaction and unlock socket Charging put on hold until plug is reconnected
Optional back-office system	Stand alone ICU Connect * Many others upon request *
Communication via *	Autodetect GPRS UTP/LAN

The settings marked with an asterisk (*) may incur additional costs. The default settings are always mentioned first. For more information about the optional settings, please refer to Appendix 2.

2.6 Accessoires

Mounting post	Art. 934459001
Dimensions (H x W x D)	1,430 x 180 x 80 mm
Material	Aluminium with powder coating
Colour	RAL 7043 (Traffic grey B)
Packaging (H x W x D)	1,460 x 360 x 280 mm
Weight	11 kg
Concrete pedestal	Art. 833829300-ICU
Dimensions (H x B x D)	570 x 350 x 220 mm
Weight	42 kg
Metal pedestal	Art. 803828601-ICU
Dimensions (H x B x D)	598 x 204 x 300
Weight	7.8 kg
Packaging (H x W x D)	50 x 295 x 620
Additional RFID card	Art. 203120010-ICU

3. INSTALLING AND CONNECTING

ENGLISH

Package content

Content of the package of the charging station consists of: Alfen Eve™, installation manual, wall mounting block and assembly accessories, RFID charge cards (depending on the selected options)

Eve

1 x

1 x

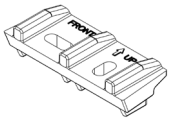

1 x

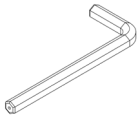

1 x

Pedestal (optional)

1 x

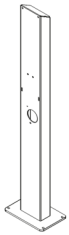

1 x

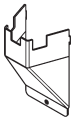

1 x

1 x

1 x

4 x

4 x

3.1 Installing and connecting

Carefully read these instructions prior to installing the charging station. Alfen ICU B.V. is not liable for any consequential damage caused by usage of this manual.

REMARK

The installation must be carried out by a qualified professional who has read this manual and works in compliance with IEC 60364 standards. Neglecting this may lead to severe injuries or hazardous situations while working with electricity.

REMARK

This work may not be carried out during rain or if air humidity exceeds 95%.

REMARK

A charging station must always be installed on a dedicated power circuit.

DANGER!

Hazard of fatal injury if installed incorrectly!
Non-compliance with the installation and environment requirements may lead to hazardous situations while working with electricity.

DANGER!

The charging station contains electric components that may still contain electrical charge after being disconnected. Wait at least 10 seconds after disconnection before commencing work.

DANGER!

The electric system must be entirely disconnected from every power source prior to performing installation or maintenance work!

3.2 Mounting and installation requirements

Refer to the table in paragraph 2.4.2 to review the safety features and the required cable thicknesses to ensure a proper connection.

Ensure that the following requirements for installing the Alfen Eve have been met:

- The cable trajectory from the main distribution station up to the Alfen Eve must be protected against short-circuiting and overcurrent with:
  - B or C residual current fuses (or otherwise in compliance with local standards and regulations).
  - Type gG fuses (or otherwise in compliance with local standards and regulations).

- The cable trajectory and the charging station are part of a TN-S system; the station must be grounded via the main distributor.
- The cable trajectory must be installed in compliance with the usual locally applying professional standards.

REMARK

The conditions at the specific location may influence the installation requirements.

REMARK

The system and cables must be installed based on the maximum charging rate at the entry or entries of the charging station. This must assume a continuous load (no diversity). The cable diameters mentioned in this manual are indicative. The technician remains responsible for determining the correct cable diameter and compliance with applicable standards and regulations.

While selecting a location to install the Eve, the following criteria must be taken into account:

- Never install in a potentially explosive atmosphere.
- Never install in areas prone to flooding without implementing compensating measures.
- Always fully comply with local technical requirements and safety regulations.
- The installation site must have a levelled and solid underground.
- Maximum atmospheric humidity of 95%
- Ambient temperature of -30 °C to 40 °C.
- Temperature difference within 24 hours max. 35 °C.
- The recommended installation height is 70 to 120cm from the ground to the bottom side of the casing.
- Ensure that the charging station is located in such a way that the charging socket is easily reachable with the charging cable. The charging cable (approx. 5 metre length) must not be under tension while connected to the vehicle.
- Prevent road users from being able to drive over the cable.
- Prevent pedestrians from being able to trip over cables.
- Ensure that the UTP/Ethernet connection on the bottom side of the charging station is covered to prevent it from being unintentionally disconnected or used by unauthorised individuals.

3.3 Mechanical installation

Use the following tools and equipment to install the Eve:

- Spirit level
- Impact drill
- Phillips screwdriver
- Screwdriver for a terminal block
- Pencil and the enclosed drill template
- Torx screwdriver (T25)
- Wire stripper
- Allen wrench
- 4 x M5 x 30mm screws
- 4 x M5 x 30mm plugs
- 4 x M5 rings

Wall mounting: Drill with the drill template

REMARK

Verify the indicated measures with a tape measure. The distances between the drill holes are 123.8 mm (top side), 39.6 mm (bottom site) and 434.3 mm (vertical).

1. Cut the drill template from the carton packaging.
2. Place the drill template at the desired location.
3. Use a spirit level to verify that the template is applied levelled.
4. Use the drill template to mark the drill holes.
5. Drill the holes at the marked points.
6. Verify the drill holes.

Installing the mounting block

1. Push fitting wall plugs into the four drill holes.
2. Attach the mounting block on the wall by using two screws in the two bottom drill holes.

Mounting post: Install the post with the concrete pedestal or metal pedestal (accessory):

1. Dig a hole of approx. 50x50cm with a depth of 65cm.
2. Place the concrete or metal pedestal in this hole.
3. Attach the post on the pedestal with four threaded bolts M10x25 mm and the corresponding rings (ref. image on the cover or the pedestal's installation manual).
4. Attach the mounting block with two screw bolts M10x25 mm.
5. Attach the charging station on the post with two screw threads M10x25 mm.
6. Attach the ground wire on the post with M4x12 mm screws and an M4 washer.
7. Guide the ground wire through the concrete pedestal and the base to the charging station.
8. Attach the cover plate to the post with the anti-theft bolt M8 x 15 mm (ref. image 2).
9. Refill the hole in which the pedestal is placed and level the surface.
10. Once completed, cover the area with a levelled protection such as tiles.

3. INSTALLING AND CONNECTING

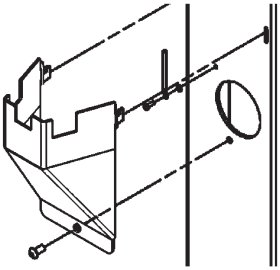

Image 2: Fixing the cable cover

Preparing the charging station

Do not remove the transparent foil from the casing during installation. This helps to prevent damage such as scratches on the display. Before installation, the white cover must be removed from the charging station. This is done as follows:

The front cover is firmly attached to the charging station and is secured with two screws at the top and bottom.

1. lace the device on its back, preferably on a soft under ground such as the packaging of the Eve.
2. Loosen the screws on the bottom with an Allen key.
3. Use a Torx m5 (T25) screwdriver to loosen the two screws on the side of the backside of the casing (ref. image 3).
4. Save these screws somewhere safe, they are required later.
5. Carefully lift the white cover, starting at the bottom in an upwards direction.
6. Take the entire white part of the unit and put it at a safe location where it cannot be scratched or dama ged otherwise; for instance in the packaging of the Eve. Be particularly careful with the display screen.

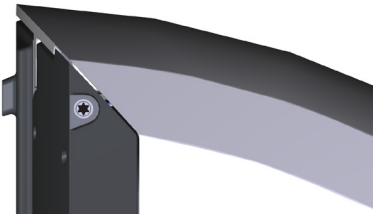

Image 3: Location of Torx T25 bolts to release, adjust and fasten the enclosure

Installing the charging station

1. Place the casing onto the already installed mounting block, in a vertical downward movement.
2. Attach the casing on the top side with two screws (max. diameter 8mm) at the right position (ref. image 4).

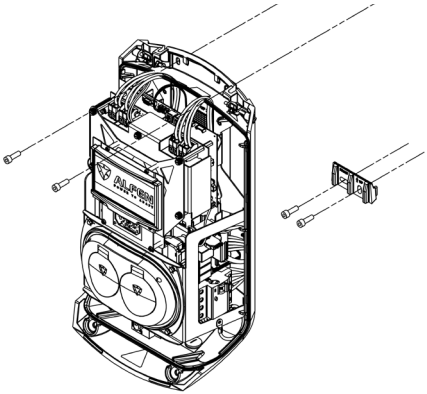

Image 4: Wall mounting

3.4 Electrical installation

WARNING

Carefully read and follow all safety instructions in this manual!

DANGER!

The electric system must be completely disconnected from every power supply prior to carrying out installation and maintenance work!

1. Pull the power cable through the cable inlet, (5 on page 2).
2. Pull the power cable at least 15 cm into the housing from the ground or wall.
3. Secure the power cable in the cable inlet by tightening it so that the power cable cannot be removed. The cable gland also functions as a strain relief.
4. The subframe with the type 2 charging sockets must be detached, refer to images 5 and 6. The subframe is equipped with a clicking mechanism on all four connection points. Detaching the subframe is best done by first detaching one side (left or right) followed by the other side.

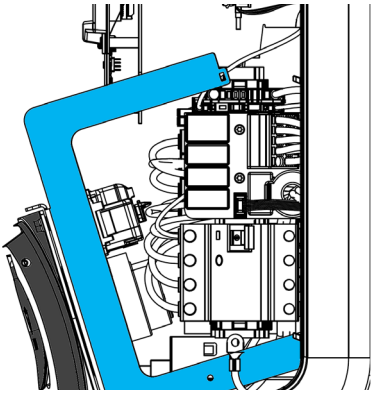

Image 5: Detachable subframe

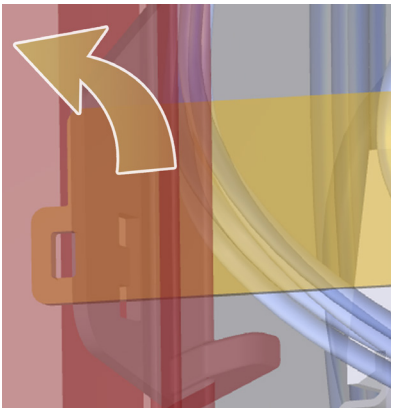

Image 6: Subframe clicking mechanism

5. Remove the sheathing from the cables with a wire stripper to connect the exposed wires in the main switch (⑬ on page 3).

WARNING

Always first connect a proper ground conductor!

6. Connect the wires to the isolating switch.
7. Place the subframe back in position by connecting the connection points with the rear frame.

NOTICE!

Make sure the cables do not become trapped while putting the subframe back into place!

8. Verify that the residual current devices inside the charging station are enabled.
9. Put the isolating switch on the I (ON) position. If useful, use a special wrench to simplify switching.
10. Press the white part of the casing in the orifices on the top side of the rear cover.
11. Use a Torx T25 screwdriver to tighten the two screws on the top side of the unit (image 3).
12. Properly close the white part of the casing by pressing on it and screwing the M8 x16 antitheft screws in the backside.

NOTICE!

Absolutely no gaps may be present between individual parts of the casing. This is detrimental to moisture and dust protection, which has an adverse effect on the life-cycle of the charging station.

13. Now remove the transparent foil from the casing.

4 COMMISSIONING THE CHARGING STATION

ENGLISH

4.1 Safety instructions prior to usage

Ensure the following safety instructions are complied with prior to commissioning your charging station:

1. Ensure the charging station is properly connected to the power supply as described in this manual.
2. Ensure that the distribution of the electricity supply is separately protected by an appropriate circuit breaker (residual current fuse or fuses).
3. Ensure the charging station is installed in compliance with this manual.
4. Ensure that the casing always remains closed during regular usage.
5. Ensure that the charging cable is not twisted and the cable, plug and casing are undamaged.

4.2 Commissioning

Switch on the power at the power cable. The charging station will now run a self-diagnostic. During this process, the following actions are performed:

1. The display briefly illuminates and then switches off.
2. The sockets are tested individually:
   - testing locking
   - testing internal relays, switching is audible
3. The display briefly illuminates.
4. The display switches on and shows the notification 'Charge point starting up'.
5. The start screen appears on the display, showing the logo.
6. The Alfen Eve is now ready for use. If the charging station is configured to connect with an administration system, this will happen automatically and directly.
7. The charging station may be configured further if desired. Use the Service Installer software application to gain access.
8. Did you have your charging station configured with a smart charge feature? Then please verify its settings with the Service Installer to optimally configure the chargingstation for local requirements.
   For more information, please refer to Appendix 2.

REMARK

For more information about the Service Installer, please visit our website for the latest version and an extensive user manual.
http://alfen.com/en/ev-charge-points

5.1 Administration systems

Your Alfen charging station is an intelligent solution able to communicate with an online administration system. These systems enable functions such as monitoring energy consumption of individual users, remote management of the charging process and simplifying maintenance of your charging station.

If, during the purchase of your charging station, you chose for additional services with a (back-end) partner or Alfen ICU B.V. (the ICU EZ services), your charging station has been configured with factory settings for the back-end system you selected. The internet connection is established via GPRS or a UTP (Ethernet) cable connection. If you chose for a GPRS (SIM card) connection, your charging station is already equipped with it and will automatically connect once your product is commissioned. If the SIM card holder (⑩ on page 3) does not contain a SIM card, then please contact your back-end provider or Alfen Sales Support.

5.2 Establishing a connection

5.2.1 Wireless connection

To establish a wireless connection, the charging station must be equipped with a GPRS-capable SIM card. Additionally, correct settings must be configured in order to connect with the preferred administration system. To configure these settings, a number of options (shortcuts) are available in the Service Installer. Use these shortcuts to easily select the preferred system with the corresponding settings. Once installation is complete, always verify the signal strength using the Service Installer.

REMARK

A connection with an administration system can only be established if you made arrangements with the supplier to start your services. Services delivered by third parties are not part of the scope of delivery of Alfen.

If, during the order process, you opted to use ICU Connect, the charging station is already equipped with a SIM card. The Eve will then automatically connect with ICU Connect during commissioning.

If you opted for another administration system during your order, it might be required to install the SIM card yourself. Image 7 shows the locations of the SIM card holder.

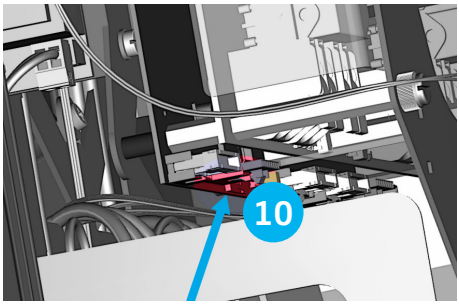

Image 7: Location of the SIM card holder.

NOTICE!

The SIM card holder must be approached very carefully. Alternatively, you can disconnect the display. The display is attached with four screws. Be careful not to lose these screws and prevent cables from being damaged or becoming disconnected if you want to create space by disconnecting the display.

5.2.2 UTP (Ethernet) connection

What cable type is required?

A CAT5 UTP cable (max. 20 metres) is the minimum requirement to be able to connect to the internet. This cable can process speeds up to 100 Mbps.

Installation

1. Connect the UTP cable with your router.
2. Switch off your charging station by putting the main switch (⑭ on page 3) in position '0'.
3. Connect the UTP cable with the port on the bottom of the charging station (⑦ on page 2).
4. Switch your charging station back on by putting the main switch in position '1'.
5. To enable communication between your charging station and ICU EZ over a UTP Ethernet connection, it may be required to adjust your network settings if security settings are configured. The information required to access ICU EZ over your network is displayed below:
   - IP address ICU EZ: 93.191.128.6
   - Port: 9090
   - (Inbound / Outbound)

It might also be required to fill in a MAC address. You can find this address on the inspection certificate of the charging station. Please contact Alfen to receive a copy of this certificate.

REMARK

Make sure that your network configurations enable secured FTP connections to the Alfen servers. This makes it possible to exchange software updates and run diagnostics.

5.3 Registering your ICU EZ account

If you wish to subscribe to the ICU EZ back-end services, then register at: https://icuconnect.nl/ez/login/.

REMARK

You can register for ICU EZ once you received your charging station. During the registration process, the information of your first charging station is required. We use this information to identify you. Once your account is created, Alfen will send you your login information.

Did you forget to register while ordering ICU EZ? No problem: If you chose to have your charging station pre-configured for ICU EZ, it is already registered and active in the administration system. All transactions and other past events are stored and are available for your inspection.

1. Complete the registration form on the Alfen website.
2. Please fill in the numbers on the back of the charge cards delivered to you in the 'Comments' field.
3. Click on 'Send'.
4. Alfen will process your application and activate your account. You will receive your login information at the earliest opportunity.
5. Use your login information to login at http://alfen.com/en/login.
6. Once you are logged into ICU EZ, you can directly monitor your charging station and its status.

5.4 Registering the charging station within your own administration system

If you use your own administration system, or if this service is delivered by a third party, ensure that the charging station type is registered correctly. If these settings are not properly configured in this administration system, the charging station will not be able to connect.

Every Eve model has its own so called ChargePoint Model that is automatically sent along during the registration process pursuant to OCPP specifications. This consists of a platform identification, combined with a unique product identification:

- 904461011
- With Alfen NG920 platform: NG920-61011

The table below provides an overview of the various article number and OCPP code combinations. Once correct registration with the back-end system is completed, the charging station is able to connect easily.

Art. no.	OCPP chargePointModel
904461011	NG920-61011
904461012	NG920-61012
904461001	NG920-61001
904461002	NG920-61002

APPENDIX 1: ERROR CODES AND PROBLEM SOLVING

ENGLISH

This appendix provides an overview of the error codes that can be generated by the Eve charging station and an initial instruction towards solving the problem. If you cannot solve the problem, please contact our service department.

Code	Description	Solution
001	General error.	Contact the service department.
002	Unknown error.	Contact the service department.
003	The charging process was started and stopped too often in a short time. The charging session was terminated to protect the vehicle and the charging station. To resume charging, terminate your current session and start a new session.	Terminate your session and disconnect the plug. You can now start a new session.
004	A charging error has occurred.	Contact the service department to request a detailed error notification.
005	The vehicle was charging more rapidly than permitted by the charging station. The charging station therefore (temporarily) shut itself down.	The charging process will restart up to three times. If the error continues to return, contact the service department for further analysis. The vehicle might be responding incorrectly.
006	The charging process was started and stopped too often in a short time. To charging session was terminated to protect the vehicle and the charging station. To continue charging, terminate your current session and then start a new session.	Terminate your session and disconnect the plug. You can now start a new session.
007	Charging error, vehicle will not shut down.	Contact the service department, the vehicle might not be responding correctly.
101	Residual current device deactivated.	Contact your installation engineer to reactivate the internal residual current device. Have your system verified for any residual current defects.
102	Problem occurred while (de)activating the charging station.	Contact your installation engineer, or the service department.
103	An undervoltage was detected.	Have your installation inspected by your installation engineer.
104	Problem occurred with internal power supply.	Contact the service department.
201	Incorrect signals received from the vehicle. The charging process cannot start.	Contact the service department for an extensive analysis.
202	Internal kWh meter provides no or inaccurate information.	Contact the service department.
203	The charging process will continue at a slower pace to manage the internal temperature. Charging might be temporarily paused if necessary.	This might occur if the ambient temperature is high. Should this happen more often, then contact the service department.
204	The charging station is not available for usage.	Contact the administrator of your charging station.
	A plug is connected without an active transaction taking place. After a specific timeframe (configurable by your administrator) you are requested to remove the cable.	Remove the plug and restart the process by plugging back in and authorising a new charging session.
	Charge card is not recognised.	Use a functioning and valid charge card.
	Connected cable is not supported.	Use an IEC 62196 compliant cable equipped with a type 2 plug (VDE-AR-E 2623-2-2).

APPENDIX 2: DEFAULT CONFIGURATION OF OPTIONAL FACTORY SETTINGS

ENGLISH

The Eve charging station has the following smart charging options:

1. Standard load balancing: the charging station divides the configured capacity over both sockets.
2. Active load balancing: similar, but expanded with the ability to communicate with the smart meter (in your charging station or indoor). The charging station takes actual energy consumption and the maximum capacity of your grid connection into account.

To simplify the order process for smart charge features, various parameters are equipped with a default configuration. This appendix provides an overview of these settings. If your installation deviates from the applicable standard settings below, please use the Service Installer to optimally configure your charging station.

Standard Load balancing

Model	Max. current per phase, per socket	Max. current (Station-MaxCurrent)
904461011	16 A	25 A power supply
904461001	32 A	40 A power supply
904461002	16 A	25 A total for both power supplies
904461012	32 A	40 A total for both power supplies

Standard Load balancing

Installation requirements:

- The Alfen charging station is equipped with an active load balancing feature activated over P1 port
- Communication cable with RJ11 plugs
- Smart meter with available P1-port
  – Communication with DSMR4.0 or higher

The charging station and the smart meter communicate with each other over the P1 port using the DSMR protocol (version 4.0 or higher). Data about the actual consumption and charging needs is regularly exchanged. Whenever smart meter capacity is limited, the charging station will apply load balancing to manage the connected vehicles. This prevents the charging station from overloading, or prevents additional grid costs from being incurred. In effect, this features provides for 'peak shaving', managing the power supply during peak moments.

If the P1 port of the smart meter is already being used by another device, a splitter can be used.

NOTICE!

Not all splitters are compatible. Using splitters with two cables may prevent your charging cable from being able to communicate with the smart meter.

To correctly configure active load balancing, the following parameters must be configured as follows:

- Station-maxCurrent: maximum configuration for standard load balancing. This limits the maximum current(s) on the circuit(s) of the charging station.
- Installation-MaxCurrent: This is the capacity of your grid connection. In case of doubt, this can be verified by your grid operator.

The table below show the standards settings for the parameters mentioned:

Product with max input current	Socket side	Adopted settings	Active Load Balancing on 1-phase connection	Active Load Balancing on 3-phase connection
32A per phase	2x3.7kW 2x11kW	Station-MaxCurrent	32	25
		Installation-MaxCurrent	40	35
2x32A per phase	2x7.4kW 2x22kW	Station-MaxCurrent	40	40
		Installation-MaxCurrent	63	63

Are these value inconsistent with yours? The technician can use the Service Installer to modify these settings.

Contact / Contact / Kontakt/ Contact

Alfen ICU B.V.
Hefbrugweg 28
1332 AP Almere
The Netherlands

P.O. box 1042
1300 BA Almere
The Netherlands

Tel. Sales Support: +31 (0)36 54 93 402
Tel. Service: +31 (0)36 54 93 401
Website: ww.alfen.com/en/ev-charge-points

ALFEN
POWER TO ADAPT