Full Arboricultural Method Statement – V1 ©

Site: 43A Church Road, Caversham RG4 7AG

Client: Tamsin Pagella Date: March 2022 Surveyor: Hugo Loudon

Heritage Tree Services Ltd
The Beeches
Stoke Row
Henley on Thames
RG9 5RB

T: 01491 681185

1.0 CONTENTS

1.0 CONTENTS 2
2.0 CONTACT DETAILS 3
3.0 SITE INTRODUCTION 3
4.0 ARBORICULTURAL IMPLICATION ASSESSMENT 3
5.0 TREES AND THEIR CONSIDERATIONS 5
6.0 THE PROCESS AND MONITORING DEVELOPMENT 6
7.0 ROOT PROTECTION AREA - RPA 7
8.0 RESTRICTIONS WITHIN THE RPA 7
9.0 TREE PROTECTION FENCING 8
10.0 AVOIDING DAMAGE TO BRANCHES AND STEMS 8
11.0 RECOMMENDED TREE WORKS 9
12.0 ARBORICULTURAL CONCLUSION 9
13.0 APPENDIX A: TREE SURVEY AND KEY 10
14.0 APPENDIX B: TREE PROTECTION PLAN 16
15.0 APPENDIX C: FENCING PROTECTION OF STEM AND LIMBS 17
16.0 APPENDIX D: ALL WEATHER SIGNAGE 18
17.0 APPENDIX E: PROJECT TIMING 18
18.0 APPENDIX G: GUIDELINES TO EMPLOYING ARBORICULTURAL CONTRACTORS 19
19.0 APPENDIX H: SAFETY COMPLIANCE RECORDS 19

2.0 CONTACT DETAILS

Role	Name	Contact Details
Client	Tamsin Pagella	T: 07966 472707 E: Tamsin.pagella@gmail.com
Local Authority	Reading Borough Council	Reading Borough Council Civic Offices Bridge Street Reading RG1 2LU T: 0118 937 3787
Surveyor	Heritage Tree Services Ltd c/o Hugo Loudon	Heritage Tree Services Ltd The Beeches Stoke Row Henley on Thames RG9 5RB T: 01491 681185 E: admin@heritagetreeservices.co.uk

3.0 SITE INTRODUCTION

The owners of these premises have applied for permission to demolish the existing garage, and construct a garage with rear extension to existing building. The Arboriculturist, Hugo Loudon, visited the premises in November 2020 to assess trees on site in order to compile an Arboricultural Method Statement to meet the British Standard 5837 (2012) 'Trees in Relation to Design, Demolition and Construction'. The document herein, must be available for all relevant site personnel and operatives to consult in order to understand that all essential tree protection constraints and safety measures are installed and upheld correctly during the duration of this project. Also, a copy of the Tree Protection Plan (TPP) outlining trees for retention, their location and their essential protection methods will accompany this document and must be retained on site for reference. Implementation and adherence of the guidelines set out in this document are integral to achieve a successful final result.

4.0 ARBORICULTURAL IMPLICATION ASSESSMENT

4.1 Constraints exist in form of retained trees/hedges as plotted on the Tree Constraints Plan (TCP) showing specific locations and allowing the architect to work with retained trees taking into effect the following criteria:

- **Root Zone:** the below survey (Page 5) provides sacrosanct root protection areas (RPAs), usually 12x the stem diameter at breast height, as defined by BS 5837 – 2012 and roots will radiate, seldom symmetrically, in the surrounding ground. At the discretion of an arboriculturalist, the RPA can be offset, if the tree could freely root in the extended direction. However, this applies where disturbance is proposed on one side only. It is not appropriate to rely on the reduced RPA where potential root zone disturbance extends halfway, or more, around the tree.
- **Physical Contact of Branches/Stems:** parts of the tree (crown dimensions and above ground impacts with nearby structures, i.e. rooflines, street lighting, boundary walls, garages, etc.).
- **Shading:** the sun will rise to approximately 60° at midday in the summer months when trees are in leaf (ratio of 16m vertical height to 10m horizontal distance) and during the winter months, when deciduous trees are without leaves, the sun will only reach 12° and so therefore, shading is reduced.

- **Falling Leaves/Seeds/Detritus and Dominance:** (related to shading as above) to be considered when planning vision splays from habituated rooms, footpaths, etc.
- **Subsidence/Heave/Root Pressures:** to be considered at the planning stages, i.e. retained tree roots up-taking rain water within banks and slopes, and near proposed foundations, in accordance with suitable soils types. In this regard the soil type is: *"Freely draining slightly acid but base-rich soils"* as listed on the Cranfield Soil and Agrifood Institute – www.landis.org.uk
- **Amenity Value:** considerations will be given to the local area's infrastructure and landscape, including screening hedges and/or trees.

4.2 Tree Protection Action Methodology - in order to protect retained trees on site a pre-works meeting will be required between the project manager and the nominated arboriculturist. The essential objective is the contractor's understanding of the planning conditions. The contractor must also understand that failure to comply with tree protection measures is a breach of planning: This can lead to:

- Improvement notice from local authority
- Enforcement notice and works on stop
- Prosecution for irreversible or permanent tree or root damage

4.3 The site features 'A' category neighbouring trees on the left-hand side approach, situated on the north-western boundary. These are T1 Lime (A1), T2 Sycamore (A1) and T3 Persian Ironwood (A1). Because of their BS:5837 categorisations, these trees are of high quality, and should be a primary focus for protection during the development.

4.4 The remaining trees onsite are far enough away from proposed development, such that they should not be influenced by the project, subject tree protection fencing being installed correctly. This fencing is to be installed prior to any demolition and construction activities and is to be retained throughout the project as shown on Tree Protection Plan (TPP). See section 9.0.

4.5 The presence of the road, brick wall and driveway will have influenced rooting development of T1 and T2 further to the north. Because of this, it is not anticipated that there are any roots to be found within the area of the garage for demolition.

4.6 No trees are required for removal to facilitate the project, with the exception of some minor low amenity shrubs to the rear of the plot.

4.7 Facilitation pruning of overhanging branches from T1, T2 and T3 may be required to prevent any potential vehicular damage that may be caused from demolition and/or construction activities. These tree are to be crown lifted to 4.5m above ground level above the driveway and garage side on the south-eastern aspect. Trailing branches to be reduced back on the south-eastern aspect by 2.0-2.5m where necessary back towards the party line. Pruning wounds are not to exceed 60mm in diameter. These works are to be carried out by a suitably qualified arborist, pruning to BS:3998 (2010) guidelines. Works should also follow the guidelines stated in section 11.0.

4.8 Building material storage can be located on the existing demolished garage hard surface, and/or on areas of retained terrace. There is limited space onsite for contractor parking.

5.0 TREES AND THEIR CONSIDERATIONS

- Trees may possibly outlive construction so it is vital to ensure the proposed development is suitably integrated in harmony with existing trees;
- Any conflicting or adverse effects the structural development may impose upon each trees' long term healthy existence;
- Healthy trees can be retained for visual screening, wind breaks, defining boundaries, complimenting buildings, future amenity value, and overall benefit to the sites character and enhancement;
- Retention of large, mature, veteran trees may suffer trauma or detrimental growth restrictions following developmental construction;
- Competition for solar gain and space for physical growth in more densely wooded sites;
- Certain healthy arboricultural specimens may be considered worthy of relocating within a design in an attempt to save and prolong life expectancy; the Arboriculturist can advise;
- Autumn leaves falling from deciduous species causing problems with guttering, or fruit making pathway surfaces slippery;
- The Root Protection Area (RPA) of each tree and its proximity to planned developmental foundations, boundaries, borders, roads and driveways, and future growth towards, or even into, drainage, services or water supplies;
- Impaction of soil, encroaching upon healthy root areas, by installation of permanent new surfacing on drives and pathways, e.g. paving slabs or tarmac areas;
- The canopy spread of each tree and limb movement throughout high winds; it's future growth potential, taking into consideration any light restriction through windows and glass panels; overhead cabling or lighting schemes and the ease of future pruning;
- The effect the development would have on each specimen's ability to gain light or create shade, depending on the individual species and its ideal growing habitat;
- Ground level areas to be raised or lowered near to, or within, the protected zones;
- Existing relevant features like streams, trenches, boundary fencing and the location of adjacent trees that may have some impact upon the development;
- Construction activity, paying attention to site access and nearby trees en route;
- Phasing of works;
- Future planting schemes to be incorporated;
- Wildlife habitat in existing trees.

6.0 THE PROCESS AND MONITORING DEVELOPMENT

6.1 The following implementations are subject to operational constraints so liable to change. The project Arborist must be notified should procedure changes occur and an inspection made to ensure compliance is being met.

- **Pre-development stage:**
  - On-site meeting between client, Local Authority, Project Manager and Arborist
  - Tree removal and pruning of trees directly impacted by development
  - Tree removal and pruning of trees indirectly impacted by development
  - Installation of tree protection fencing
- **Development stage:**
  - Site safely compounded and signage in place
  - Ensure site access available to construction traffic
  - Storage area for building materials, skips, etc. as shown on Tree Protection Plan (TPP)
  - Demolition, if required
  - Installation of services and ground works
  - Development of project
  - Completion and Arborist's inspection
- **Post-development stage:**
  - Removal of tree protection fencing
  - Landscaping - contractor's briefed by Arborist
  - Hard and soft landscaping, followed by boundary installation, if required

6.2 Arboricultural visits will be made to observe the constraints procedures are being upheld. The compliance form (see appendix H) requires signatures by both the Arboriculturist and the Project Manager for the Local Authority to view.

6.3 The Arborists visit ensures continual protection but should any remedial changes be required, advice can be speedily given to all parties and recorded in the comments for the Local Authority to view.

6.4 Supervision is given by the Arborist at crucial stages of development, to oversee approved methodology is adhered to and to ensure arboricultural objectives are met.

6.5 If the task is prolonged, and the Arborist is satisfied that criteria is being met, telephone supervision between the project manager and the Arborist will suffice. The Local Authority is to have free access to the site and will pass recommendations, if required, directly to the Arborist.

6.6 Remedial tree works and any site clearance should be carried out prior to installation of tree protection fencing. However, it may be helpful to mark out with tape, where the protective fencing is to be erected, in order to assist with site clearance and vegetation trimming.

6.7 Removal of hard surfacing, may require adjustments to the protective fencing. This must be discussed with, and approved by, the Local Authority prior to any alterations commencing.

7.0 ROOT PROTECTION AREA - RPA

7.1 Data is collected by the Arborist and recorded in the Tree Survey which, in accordance with BS 5837:2012, gives us the calculations to determine the Root Protection Area (RPA). This measurement is designed to protect the minimal root mass in order to ensure trees survive the construction process.

7.2 All parties must respect the root protection areas and observe necessary precautions within and adjacent to them, noting all considerations as itemised in point 5.0 and restrictions listed in point 8.0.

8.0 RESTRICTIONS WITHIN THE RPA

8.1 The area inside the tree protection fencing is called the Construction Exclusion Zone (CEZ) where:

- No mechanical excavation is permitted.
- No excavation allowed by any means without Arborist supervision.
- No hand-digging without approved Method Statement from Arborist.
- No lowering of ground levels (except to cut-back tall grasses with hand-tools).
- No storage of plant, machinery, tools or materials.
- No dumping of waste materials including mortar washings.
- No bonfires or fire lighting allowed.
- No parking of any vehicle.

8.2 In addition, the following exclusions apply outside the Construction Exclusion Zone:

- To prevent harmful toxins accessing tree roots, no fuel, oil, bitumen, mortar washings or other chemicals are to be tipped within a further 10m from the tree protection fencing. This area is not to be used for storage of ballast, builder's sand or concrete.
- No fires are to be lit within a 20m radius of the tree since heat could damage limbs and cause die-back of bark, leading ultimately, to tree death.

9.0 TREE PROTECTION FENCING

9.1 The Tree Protection Plan (TPP, Appendix B) shows the correct positioning of Tree Protection Fencing which must be installed as instructed (Appendix C) prior to any of the following:

- Plant machinery delivery
- Building materials delivery
- Demolition
- Soil stripping
- Construction works
- Landscaping

9.2 Once erected, it is imperative that all Tree Protection Fencing will not be altered or moved without prior consent from the nominated Arborist with approval from the Local Authority.

9.3 The Tree Protection Fencing will be constructed using 'Heras' welded mesh panels set onto a scaffolding framework which is then braced and firmly secured into the ground, to resist impact. Rubber feet or concrete blocks are not acceptable as the fencing panels are easily moved. Should alternative Protective Fencing be required, suitability and efficiency must be discussed with the Arborist and consent given by the Local Authority.

9.4 The all-weather signage (Appendix D) must be attached to the fencing for public display and not attached directly to the tree stems. Once the Construction Exclusion Zone (CEZ) is clearly defined by the Tree Protection Fencing and relevant signage, construction can commence.

10.0 AVOIDING DAMAGE TO BRANCHES AND STEMS

10.1 The proximity of retained trees must be considered when planning site operations with wide or tall loads, or movement of excavators and cranes with wide booms. If limbs or trunks are damaged, pathogens may enter wounds leaving the tree unsafe for retention.

10.2 Where plant machinery manoeuvres are required on site, a banksman must oversee proceedings to ensure trees remain unharmed. In some cases, the barest minimum selective pruning works called 'Access Facilitation Pruning' may be advised by the Arboriculturist. and his team. Under no circumstances should the construction personnel carry out 'Access Facilitation Pruning'. This work should be left to the qualified Arborist and his team only.

11.0 RECOMMENDED TREE WORKS

11.1 Under no circumstances will a tree carrying a Tree Preservation Order (TPO) or listed within a conservation area be worked upon without prior local authority permission.

11.2 Any tree requiring pruning or actual tree removal will be carried out in strict accordance to BS:3998 (2010) – 'Recommendations for Tree Work'. All works will be competently carried out by the qualified, and insured, tree surgeons and all relevant training approved by the Arborist.

11.3 During tree works within the project, safety signage must be displayed and only employees of the tree surgery company may enter the work zone. If works are on or alongside the public highway, then relevant signage and traffic management will be required in accordance to Chapter 8 Signage, Lighting and Guidance ensuring relevant authorities and the project Arborist are informed prior to commencement, giving required notice. The site agent will approve the programme of works.

11.4 Should overhanging trees encroach across site boundaries, all efforts to receive permission must be sought from the relevant land owners. Trespassing will not be permitted.

11.5 The 'Countryside and Wildlife Act (1981)' and the 'Countryside and Rights of Way Act' must be adhered to at all times. Should any bat activity, or empty roosts be suspected, advice must be sought by the Local Authority.

11.6 Tree stumps in the Construction Exclusion Zone (CEZ) must not be mechanically dug or winched out, but removed by:

- Cutting flush to ground level, or
- Dug out using low ground disturbance grinding machinery

11.7 Any debris created from wood chipping of debris created by tree surgery, can be left on site for future replanting projects and landscaping, or removed from site by a registered member practicing the Environment Agency Policies.

11.8 In this instance, facilitation pruning of overhanging branches from T1, T2 and T3 may be required to prevent any potential vehicular damage that may be caused from demolition and/or construction activities. These tree are to be crown lifted to 4.5m above ground level above the driveway and garage side on the south-eastern aspect. Trailing branches to be reduced back on the south-eastern aspect by 2.0-2.5m where necessary back towards the party line. Pruning wounds are not to exceed 60mm in diameter. These works are to be carried out by a suitably qualified arborist, pruning to BS:3998 (2010) guidelines.

11.9 Additional works are proposed to T9, T10A and T10B, as per the survey in section 13.0.

- Due to the extensive basal hollowing and general decline of T9 Sycamore, it is proposed for removal
- T10A and B (2x Sycamores) feature heavy squirrel damage and deadwood, which is to be stabilised through appropriate pruning and retained for ecological habitat.

12.0 ARBORICULTURAL CONCLUSION

With compliance to the tree protection measures by the contractor and supervision and guidance from the nominated arboriculturist, the retained trees should not experience trauma, damage or a shortened expected lifespan.

13.0 APPENDIX A: TREE SURVEY AND KEY

TREE or Group or Hedge	**Species Common Name** If tree offsite, record estimated measurements using '#'	**DBH at 1.5m** recorded in mm	Canopy **Height** in metres + **First Branch** in metres from ground level with cardinal direction	**Branch Spread** **N E S W** metres	**Age** **Y SM EM M LM OM Vet**	**SULE** **<10 10+ 20+ 40+**	**General Observations**	**Structural form** **Poor Fair Good Dead**	**Physiological form** **Poor Fair Good Dead**	**BS 5837 RC** **A B C U**	**BS 5837 RPA Radius** recorded in metres m and m^2	**Recommended Works**
T1	Lime #	580	H: 17m FB: 3m/ S	N 4 E 5 S 6 W 6	M	40+	Bifurcation at 6m. Historic pollard behind a boundary wall.	G	G	A1	6.9m 150m^2	Refer to section 11.0.
T2	Sycamore #	500	H: 18m FB: 5m/ E	N 7 E 8 S 8 W 9	M	40+	Canopy bias to the north behind a boundary wall.	G	G	A1	6.0m 113m^2	Refer to section 11.0.
T3	Persian Ironwood	220	H: 9m FB: 2m/ S	N 6 E 7 S 6 W 3	M	40	Significant botanical investment.	G	G	A1	2.7m 23m^2	Refer to section 11.0.
T4	Sycamore	680	H: 19m FB: 3m/ S	N 7 E 6 S 7 W 7	M	40+	Tension form at 5m.	G	G	A1	8.1m 206m^2	---
T5	Yew	650	H: 10m FB: 5m/ S	N 5 E 4 S 7 W 6	M	40+	Bifurcation at 2m, not untypical of species.	G	G	A1	7.8m 191m^2	---
T6	Yew	430	H: 10m FB: 4m/ S	N 4 E 5 S 6 W 4	EM	40+	Slightly suppressed by T5 – canopy bias to south west. Note the *Ganoderma carnosum*, a relatively rare fungus.	G	G	A1	5.1m 81m^2	---

T7	Yew	680	H: 10m FB: 5m/ N	N 6 E 6 S 6 W 6	M	40+	Bifurcation / co-dominant stem at 450mm. Historical pruning to east.	F	G	A1	8.1m 206m^2	---
T8	Yew	400 300	H: 10m	N 6 E 7 S 2 W 4	EM	40+	Large pruning wound to east at 10m. Elongated sub stem to west.	F	G	B2	6.0m 113m^2	---
T9	Sycamore	760	H: 17m FB: 12m/ W	N 6 E 5 S 5 W 5	M	<10	Significant basal hollow to east, bonfire damage. Good buttress flare present. Some retrenchment/ decline in canopy.	P	P	C2	9.0m 255m^2	Fell to ground level.
T10 A + B	Sycamore x2	180	H: 13m FB: 6.5m/ E	N 2 E 3 S 2 W 2	SM	<10	Heavy squirrel damage in upper crown. Canopy retrenchment and dead stems and branches. Some ecological habitat value.	P	F	C2	2.1m 14m^2	Stabilise by pruning to retain features for ecological purposes

T5, 6, 7, 8. Note the implication of formality in this linear planting group.	T6. *Ganoderma carnosum* fruitification

T9. Note prod protruding 300mm below ground level. The tree is displaying classic 'Eiffel Tower' type root anchorage, with completely hollow base.

T10 A+B. severe squirrel damage. Cavities can produce useful ecological habitats.

Looking south from the north of the garden, note theres a wisteria to the east.	

The survey, unless otherwise stipulated, is based on the qualified Arboriculturist making trained observations from ground level.

KEY	Explanation and Units
T, G, H, S or W	**Tree/Group/Hedge/Shrub/Woodland** numbers in tree survey and on enclosed plan.
Species	Defined in Latin and/or Common names. Estimated dimensions (e.g. for off-site or otherwise inaccessible trees where accurate data cannot be recovered) are suffixed with a # symbol.
DBH	The **Diameter at Breast Height** (DBH) measures the girth of the stem in millimeters at 1.5metres above ground level in accordance with Forestry Commission specifications.
Height	Approx. **Height** of tree canopy recorded in metres. Also first significant branch height and its cardinal direction.
Canopy Spread	Approx. **Canopy Spread** recorded in metres with cardinal growth direction given where appropriate; **N**, **E**, **S**, **W**.
Age	**Y:** **Young** tree less than fifteen years old and <1/3 fully grown. **SM:** **Semi-mature** tree having attained 1/3 to 2/3 full stature and 1/3 to 1/2 estimated lifespan. **EM:** **Early mature** tree at 2/3 to virtually full size, and halfway through its safe life. **M:** **Mature** fully-grown tree with safe useful life expectancy. **LM:** **Late Mature** fully grown tree, possibly declining in vigor yet many years of safe life expected. **OM:** **Over-mature** tree fully grown, possibly declining in vigor with possible historic or ecological value. **Vet:** **Veteran** usually very old and of significant historic, habitat or cultural value.
SULE	Remaining **Safe Useful Life Expectancy (SULE)** recorded using the following statistics: <10 years, 10+, 20+ or 40+ years.
Observations	**Root Condition:** The visual assessment of the rooting area, taking into consideration any evidence of physical damage, soil compaction or heave, excavation work and/or drainage problems. **Stem Condition:** The visual assessment of the stem and main scaffold branches observing any visible faults and wounds, and other exterior signs which may suggest possibility of internal compromise. If decay is suspected, a sounding hammer will be used. **Leaf & Bud:** The visual assessment of the amount and condition of foliage cover, and/or bud development, when compared against the foliage of the surrounding trees of the same species.
Structural and Physiological Form	**Good / Fair / Poor / Dead**
BS:5837 RC	**Retention Category:** **Category A** = High quality or value and a life expectancy of 40+ years **Category B** = Moderate quality or value and a life expectancy of 20+ years. **Category C** = Low quality or value with a life expectancy of at least 10 year or a stem diameter below 150mm. **Category U** = Trees that are dead or dying, or infected with pathogens, or where loss is anticipated, or if suppressing adjacent trees of superior quality. **Sub division:** **Category 1** = Aboriculturally significant, rare and good examples of specific species. **Category 2** = Considered visually valuable to the landscape, either individually or in groups. **Category 3** = Significant habitat conservation value with possible historical or commemorative importance.
BS:5837 RPA	The **Root Protection Area (RPA)** is measured in metres, and metres squared, specifically calculated to ascertain the placement of specialist protective fencing with an allowance of plus or minus 20% in any one direction.
Recommended Works	The Arboriculturists recommendations for any tree surgery work and requirements for re-inspection or testing.

14.0 APPENDIX B: TREE PROTECTION PLAN

(see attachment)

15.0 APPENDIX C: FENCING PROTECTION OF STEM AND LIMBS

Figure 2 **Default specification for protective barrier**

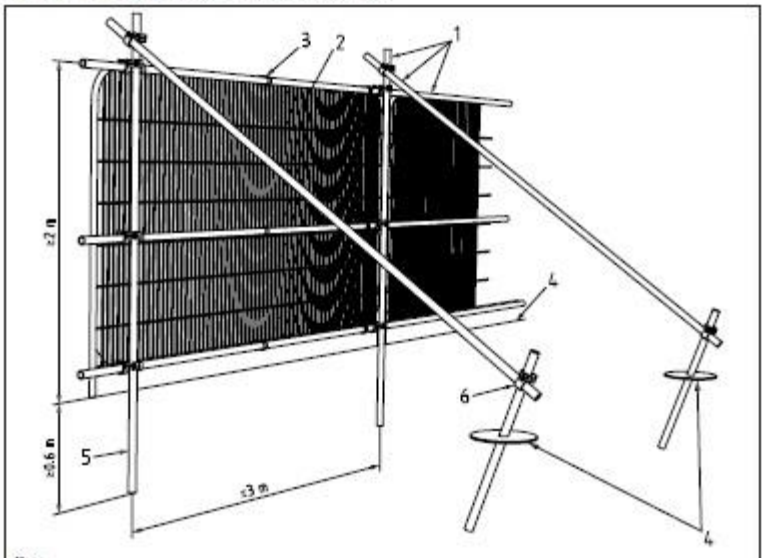

Key

1 Standard scaffold poles
2 Heavy gauge 2 m tall galvanized tube and welded mesh infill panels
3 Panels secured to uprights and cross-members with wire ties
4 Ground level
5 Uprights driven into the ground until secure (minimum depth 0.6 m)
6 Standard scaffold clamps

TREE PROTECTION BY HERAS PANELS
OR MARINE BOARD BOXING

Figure 3 **Examples of above-ground stabilizing systems**

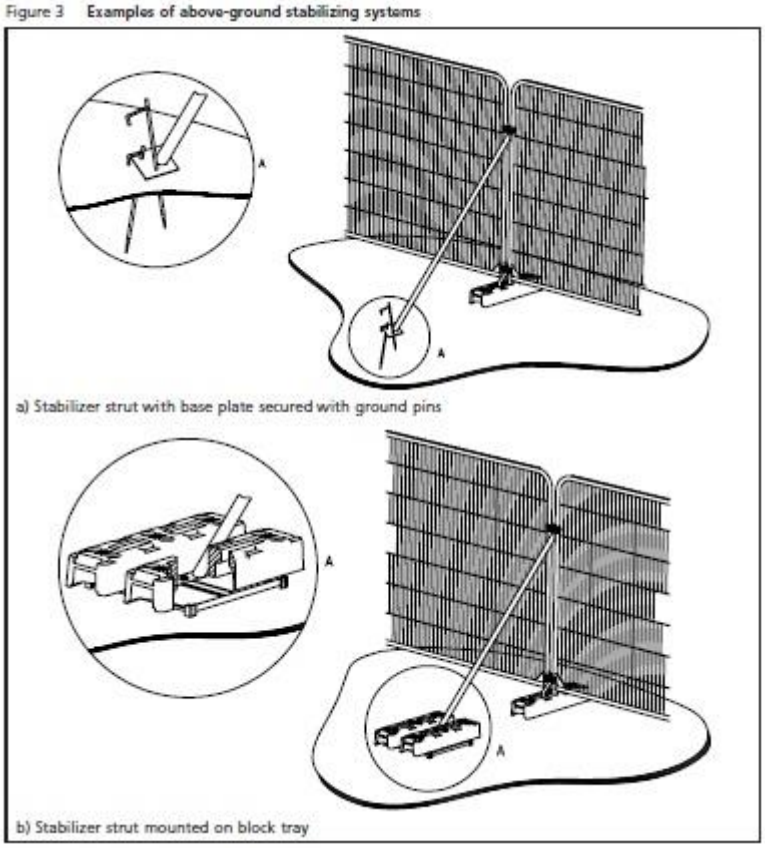

ALL WEATHER SIGNAGE
(SHOWN IN APPENDIX D)
DISPLAYED ON HERAS PANELS

16.0 APPENDIX D: ALL WEATHER SIGNAGE

All weather signs, such as this example, must be fixed to the outer perimeter of the site, ideally to the fence panels, but not directly onto the trees.

TREE PROTECTION AREA - KEEP OUT

(TOWN & COUNTRY PLANNING ACT 1990)

TREES ENCLOSED BY THIS FENCE ARE PROTECTED BY PLANNING CONDITIONS AND/OR ARE THE SUBJECT OF A TREE PRESERVATION ORDER. ANY INCURSION INTO THE PROTECTED AREA MUST BE WITH THE WRITTEN PERMISSION OF THE LOCAL PLANNING AUTHORITY.

17.0 APPENDIX E: PROJECT TIMING

The nominated Arboriculturist will visit site multiple times throughout the duration of the project to ensure tree protection measures are installed correctly, and are being maintained and adhered to in strict compliance with The Arboricultural Method Statement herein.

18.0 APPENDIX G: GUIDELINES TO EMPLOYING ARBORICULTURAL CONTRACTORS

It is recommended that clients:

- Have more than one contractor supply a quote
- Check training and insurance certificates
- Be clear about procedures and enforceable protective constraints
- Ensure all contractors adhere to policy statements set down by the Arboriculturist
- Communicate fully in order to achieve success with project
- Heritage Tree Services Ltd are approved by the Arboricultural Association

19.0 APPENDIX H: SAFETY COMPLIANCE RECORDS

With safety procedures, it is recommended that each stage is recorded and correct implementation observed and adhered to in the Safety Compliance Record. Any comments and a signature will be required.

Observation:

Signed:..... Position:.....Date:.....

Observation:

Signed:..... Position:.....Date:.....

The Tree Protection Plan and Arboricultural Method Statement is a vital point of reference and should be available for the site owners, the architect, the Local Council and the entire construction team for all to review. Implementation of protective measures must be made by competent staff to assist the smooth and successful running of the scheme.

Full Legal Disclaimer

This report was prepared as a report of work instructed by client (as specified). Neither Heritage Tree Services Ltd nor any associated company, nor any of their employees, nor any of their contractors, subcontractors or their employees, makes any warranty, express or implied, or assumes any legal liability or responsibility for the accuracy, completeness, or any third party's use or the report and its findings. Reference herein to any specific commercial product, process, or service by trade name, trademark, manufacturer, or otherwise, does not necessarily constitute or imply its endorsement, recommendation, or favouring by Heritage Tree Services Ltd or any associated company. The views and opinions of authors expressed herein do not necessarily state or reflect those of Heritage Tree Services Ltd or any associated company.

Copyright & Non-Disclosure Notice

The content, layout and any supporting digital files associated with this report are subject to copyright owned by Heritage Tree Services Ltd. Exceptions to this are present where that copyright has been legally assigned to us by another party / organisation. In addition, Heritage Tree Services Ltd may utilise content generated under license. Reproduction, scanning, copying or distribution of this report in any form is prohibited without prior written agreement.

Third Party Disclaimer

Neither Heritage Tree Services Ltd nor any of its associated companies, sub-contractors or suppliers will be responsible or liable for any claim of loss or damage resulting from the third party use of the information contained within this report.

Specific - Trees

All tree inspections, unless specified, have been undertaken from ground level and using non-invasive techniques. Comments contained within the report on the condition and risk associated with any tree relate to the condition of the tree at the date and time of survey. Please note that the condition of trees is subject to change. This change may occur, but is not limited to biological and non-biological factors as well as mechanical / physical changes to conditions in the proximity of the tree. Trees should be inspected at intervals relative to identified site risks and in accordance with relevant HSE and Central Government guidance. Heritage Tree Services Ltd can provide further information on this matter if required.

Please note no statutory control checks have been undertaken (unless specified). Where tree surgery works have been identified these works are based on the assumption that planning is approved. No tree works should be undertaken prior to determination of this application without up to date confirmation of the Tree Preservation Order / Conservation Area Status of the vegetation. All works should be undertaken in accordance with the appropriate Duty of Care. This should include, for example, site specific risk assessments and due diligence inspections for the presence of protected species.

Any comment relating to 3rd party trees has been made without full access to the tree(s). Should these trees have any impact on the proposed development we would advise you to instruct us to contact the 3rd party and undertake further inspection work.