|| February 2022 || Version 1.1 ||

Odour Management Plan

Evaluation of Site for Street Food Market

Land off Hosier Street
Reading

Joynes Nash

Acoustics · Environmental · Public Health

Client	Blue Collar
Date:	14th February 2022
Author:	Peter Nash
Version:	1.1

DISCLAIMER

The preparation of this report by Joynes Nash has been undertaken within the terms of the brief and the terms of the contract, using reasonable skill and care and taking account of the resources devoted to it by agreement with the client. We disclaim any responsibility to the client and others in respect of any matters outside the scope of the above. This report is confidential to the client and we accept no responsibility of any nature to third parties to whom this report, or any part thereof, is made known. Any such party relies on the report at their own risk.

The opinions and interpretations presented in this report represent our reasonable technical interpretation of the data made available to us. However, due to the uncertainty inherent in the estimation of all parameters, we cannot, and do not guarantee the accuracy or correctness of any interpretation and we shall not, except in the case of gross or wilful negligence on our part, be liable or responsible for any loss, cost damages or expenses incurred or sustained by anyone resulting from any interpretation made by any of our officers, agents or employees. Joynes Nash accepts no responsibility for data provided by others.

COPYRIGHT © Joynes Nash Ltd 2022

The material presented in this report is confidential. This report has been prepared for the exclusive use of the client and shall not be distributed or made available to any other company or person without the knowledge and written consent of the client or Joynes Nash.

www.joynes-nash.co.uk

Simon Joynes
07870508492
simon@joynes-nash.co.uk

Pete Nash
07769202073
pete@joynes-nash.co.uk

Office
17 Park Lane, Henlow
Bedfordshire, SG16 6AT

Company Number:
9422341

VAT Registration No:
204 752234

About the Team

Peter Nash BSc(Hons), MSc, CEnvH, MCIEH, MIOA, TechIOSH

Peter Nash has 16 years' experience as a Local Authority Environmental Health Officer, up to Technical Manager Level and has 15 years of Professional Practice within the Environment Industry. He holds a BSc(Hons) in Environmental Health, the IOA Diploma in Acoustics and Noise Control and an MSc in Applied Acoustics. He is a Chartered Environmental Health Practitioner and registered with the Environmental Health Registration Board. Peter is a Member of the Chartered Institute of Environmental Health, and a Member of the Institute of Acoustics. He has appeared as an expert witness in a number of significant nuisance and planning cases, public inquiries and appeals.

Simon Joynes BSc(Hons), MSc, CEnvH, MCIEH, AMILM, AMIOA

Simon Joynes has over 20 years' experience in both Private Sector and Local Government. He has acted as a senior advisor and has significant experience in the technical aspects and practical application of environmental law, including acting as an expert witness in courts and planning enquiries and the preparation and reviewing of environmental reports and mitigation strategies. (Air Quality, Land Contamination, Acoustics, Water Quality, Odour Management & Industry Regulation). He holds a BSc (Hons) Environmental Health, MSc in Contaminated Land Remediation, the IOA Diploma in Acoustics and Noise Control, Certificates of Competence Environmental Impact Assessments. He also holds affiliations with the Chartered Institute of Environmental Health, the Institute of Acoustics and is an Associate Member of the Institute of Leadership and Management.

Contents

1 Introduction 1
2 Site Location 1
3 Planning Policy Context 2
4 Site Description 3
5 Site Risk Assessment 3
6 Extraction System 4
7 Odour Management 5
8 Conclusion and Recommendations 5

Appendix A Site Plans
Appendix B Extraction System Details

1 Introduction

1.1 Joynes Nash Ltd has been instructed to undertake an odour assessment pertaining to the potential odour impacts arising from the use of the land for a Street Food Market in line with the requirements of planning permission 210540. The proposal is for the land adjacent to the existing market to be utilised as a container-based food market.

2 Site Location

2.1 The proposed development location sits within Reading Town Centre. To the south of Hosier Street. The land immediately to the north of the application land is under the control of the applicants and is currently utilised as a busy market.

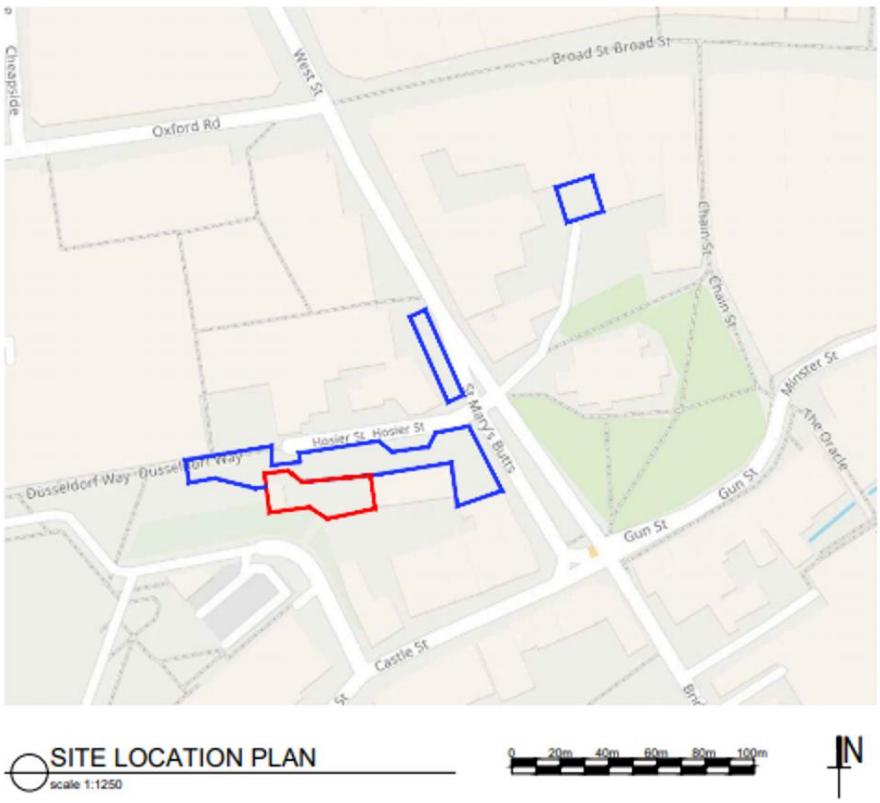

Figure 2.1 – Site location

2.2 There are currently no odour sensitive premises within the vicinity of the application site. This assessment and plan has been undertaken on that basis, as this is the current situation.

However, No. 20 Hosier Street has permission to be turned into a hotel and there is currently an application for 400 residential units above the Broad Street Mall. One of the key elements of the plan is that it is reviewed annually to reflect the situation at that time, this will include the new developments once/ if development commences.

3 Planning Policy Context

3.1 Relevant guidance and national planning policy is contained primarily within the control of pollution and protection of amenity concerns within the National Planning Policy Framework (NPPF).

NATIONAL PLANNING POLICY FRAMEWORK

3.2 The NPPF sets out the Government's planning policies for England and how these are expected to be applied. The emphasis of the Framework is to allow development to proceed where it can be demonstrated to be sustainable. In relation to odour there are no specific comments however, Paragraph 185 of the Framework states:

> *Planning policies and decisions should ensure that new development is appropriate for its location taking into account the likely effects (including cumulative effects) of pollution on health, living conditions and the natural environment, as well as the potential sensitivity of the site or the wider area to impacts that could arise from the development.*

PLANNING PERMISSION 201540

3.3 Planning permission 201540 contains a specific planning condition relating to the assessment of odour, condition 12 states:-

> *No development hereby permitted shall be occupied or its use first commenced until an odour assessment has been carried out and a detailed odour management plan to include scaled plans, odour control specifications and a maintenance plan has been submitted to and approved in writing by the Local Planning Authority. Reference shall be made to the DEFRA guidance on the Control of Odour and Noise from Commercial Kitchen Exhaust Systems (Jan 2005) when assessing potential odours and selecting appropriate odour control methods. Thereafter, the development shall not be carried out other than in accordance with the approved scheme unless otherwise agreed in writing by the Local Planning Authority.*

DEFRA Guidance on the Control of Odour and Noise from Commercial Kitchen Exhaust Systems

3.4 The DEFRA guidance on the Control of Odour and Noise from commercial Kitchen Exhaust Systems was withdrawn by DEFRA on the 15th September 2017.

3.5 As this is this document is explicitly referenced within the planning permission, the risk assessment element (Appendix C of the guidance) has been utilised for the assessment of the odour risk associated to the development.

3.6 The Risk Assessment element of the guidance looks at four factors to rate the level of likely impact and the associated level of odour control needed. The four factors considered are the Dispersion, the Proximity of receptors, the Size of the kitchen and the Cooking type. Each of these factors attracts a score which is the added together to give and overall risk which then dictates the level of odour control, either Low, High or very High.

3.7 The guidance was not designed for the situation at Hosier Street, with it being much more based around standard buildings and commercial kitchens, rather than the street food from small units that the operation at Hosier Street is undertaking. Nevertheless the fundamental principles of odour impact are the same and the risk rating and risk assessment within it is still a valid tool.

4 Site Description

4.1 The development comprises 4 shipping containers to be used as kitchens for street food vendors, as well as seating, a bar, a commercial fridge and associated ancillaries (waste storage etc).

4.2 The plan of the development is shown within appendix A. The development site is a flat open area, with only one two storey structure within 30m and is fully open to the east. There is no shadowing effect which may impinge on free airflow around the site.

4.3 The site is a town centre location which sits adjacent to the existing market area. There are a number of other commercial kitchens in the vicinity, with varying degrees of dispersion and odour associated to them.

4.4 The end use of the kitchens is not fixed and there will be a rolling change of traders occupying the containers. Among the food types likely to be on site there will be, steamed Japanese buns, vegan taco's, pizza etc. This is in line with the other operations carried out by Blue Collar in and around Reading where they operate high quality street food markets.

4.5 The existing 'pop up' food market operates within the town centre and has done so for a number of years in Market Place Square. The kitchens primarily operate from gazebos and small units and to the operators knowledge there have been no issues with odour complaints from that site.

5 Site Risk Assessment

5.1 Utilising the risk assessment process as set out within the DEFRA guidance the following assessment and score has been derived for the development as things stand currently.

5.2 As previously discussed the applicant who will be the site operator, is aware of the developments granted in close proximity to the site and accepts that they are responsible for ensuring that they do not cause unacceptable impact on these developments. However given the size and nature of the development, the control of the odour that the Local Authority have by virtue of the condition and the possible long delays in these developments beginning, then it is a reasonable approach to undertake this assessment and base any odour control on the current situation. When this changes then the assessment will need to be undertaken again and the level of odour control required reconsidered. It is also reminded that our client commits to an annual review of the odour risk assessment.

5.3 The odour control risk assessment is as follows:-

Dispersion	Proximity of Receptors	Size of Kitchen	Cooking Type	Total Score
5	1	1	7	14

This places the activities within the low-risk group, requiring a low level of odour control.

5.4 The rational behind the scoring is as follows:

Dispersion
The containers are located in an open position with discharge 1m above the tops of the containers possible. This would equate to 1m above ridge height of a traditional building.

Proximity of Receptors
At the present time there are no known receptors within 100m of the development site. As previously discussed this will change in the coming years, and the risk assessment and risk rating will need to be amended to reflect this.

Size of Kitchen
The kitchens are all small kitchens full encapsulated within the shipping containers, they are therefore small takeaways so are classified as small by the risk assessment.

Cooking Type
The rolling line up of the businesses within the development makes this the hardest to assess. The majority of the cooking falls under the low to medium risk grouping, with pizza, Japanese buns, vegan taco's etc all being low to medium risk. However as there is the potential for higher risk foods then the worst case foreseeable scenario of high risk has been utilised. The very nature of the undertaking means that very high risk fried foods such as fish and chips and traditional burgers will not be present as they do not fit within the companies portfolio of kitchens and are already very well provided for by other premises in the vicinity.

6 Extraction System

6.1 Due to the size of the containers and the inherent open nature of a street food operation then a small extraction hood needs to be utilised. However any provision for make-up air is unnecessary.

6.2 The extraction units are Parry Snack Canopy ST1550. These are specifically designed for mobile food trailers and units with limited size. The details of the extraction are presented within Appendix B.

6.3 The extraction system is capable of a maximum airflow of 0.64m^3/sec.

6.4 The systems extract through the rear of each unit with the ducts terminating above the height of the containers, in order to ensure good dispersion.

7 Odour Management

7.1 The extraction system must be utilised whenever cooking operations are taking place within the containers.

7.2 The extraction system must be maintained in its 'as installed' condition for the duration of the sites operation.

7.3 The filters and grease traps on the extraction system must be cleaned daily when in use.

All waste must be store in the dedicated waste storage area and collections will be undertaken twice weekly.

7.4 The odour management plan and assessment will be reviewed on the following basis

- At least annually
- following complaints of odour nuisance
- before nearby developments which may impact on the required odour control (as previously discussed) are due to commence use/occupation.

8 Conclusion and Recommendations

8.1 An odour impact assessment and management plan has been prepared for the permitted development of the site to a Street Food Market, in line with the guidance stated within the planning condition.

8.2 The assessment has found that as things currently stand that the site will present a low risk of odour disturbance, and as such requires a low level of odour control.

8.3 The situation may change over coming years as other developments are undertaken. If this is the case then the assessment and management plan will be reviewed to take this into account and ensure that the new developments are not unreasonably impacted.

8.4 Given the above, this plan meets the requirements of the Planning Permission.

Appendix A – Plans

Extract Locations on each unit

CLIENT:	BLUE COLLAR
CREATED:	KITSCH & SINK FOR STUDIO BARKER
DRAWN BY:	DAVID GARDINER
PROJECT:	CONTAINER VILLAGE
SITE:	READING MARKET QUARTER
TITLE:	PLAN VIEW GROUND FLOOR
SCALE:	1 : 100 @ A2
DATE:	01.03.2021
VERSION:	VERS 2 OF 2

DAVID GARDINER

Appendix B – Extraction System Details

GUIDELINE FOR THE SELECTION, INSTALLATION, AND OPERATION OF PARRY EXTRACTION CANOPIES

MODELS:

SNACK TYPE CANOPY RANGE

GENERAL TYPE CANOPY RANGE

TITAN TYPE CANOPY RANGE

Parry Group Limited, Town End Road, Draycott, Derby, England DE72 3PT
www.parry.co.uk

Contents

Parry Canopy Range

- Canopy specifications
- Canopy dimensions
- How to join canopies together to form a run
- Standards for installing extraction canopies
- Positioning canopies
- Safety instructions for fitting a canopy
- Canopy installation instructions
- Internal fan
- Repositioning internal fan
- External fan
- Hanging on a wall
- Speed controllers
- Maintenance instructions

Filters

- Filter specifications

External Canopy Value pack

- External value pack specification
- Duct mounted fans specification
- Wiring diagram
- Parry canopy specification for duct mount fans
- Canopy fan cut out details
- Silencers for Duct mount fans

Internal fans

- Centrifugal fans
- Centrifugal fan specification
- Canopy drawings showing aperture cut out for fitting internal fans and ducting

Speed controllers

- Speed controller installation instructions

Canopy Lights

- Types of available lighting
- Canopy light fitting instructions

Gas Interlock

- Gas interlock system
- Interlock controller
- Pressure switch
- Gas Solenoid valve and pressure transducer
- Speed controller installation instructions

Warranty information

Disposal information

Canopy specifications

Snack Type Range, General Type Range and Titan Type Range

Parry canopies are designed for small and medium size commercial kitchens. With three different ranges of canopy on offer there are plenty of styles and sizes to choose from.

All our instructions and recommendations are based on canopies being fitted with a maximum of 12 meters of duct work, and two 90 degree bends.

The canopies are manufactured from high quality stainless steel and contain a bank of baffle filters that are easily removed for cleaning.

All canopies are available with the added option of either an internal fan, an external fan value pack (that includes a speed controller, duct mount fan and spigots,) and a range of lighting solutions. These options are explained in full in the relevant sections of this document.

Canopy Dimensions

Snack Type Canopy

Suitable for small light duty kitchens or mobile trailers.

Canopy Code	Dimensions A x B x C	Weight
ST1050	1000 x 810 x 500	25Kg
ST1250	1200 x 810 x 500	29Kg
ST1550	1500 x 810 x 500	36Kg
ST1850	1800 x 810 x 500	52Kg
ST2150	2100 x 810 x 500	60Kg
ST2450	2400 x 810 x 500	68Kg

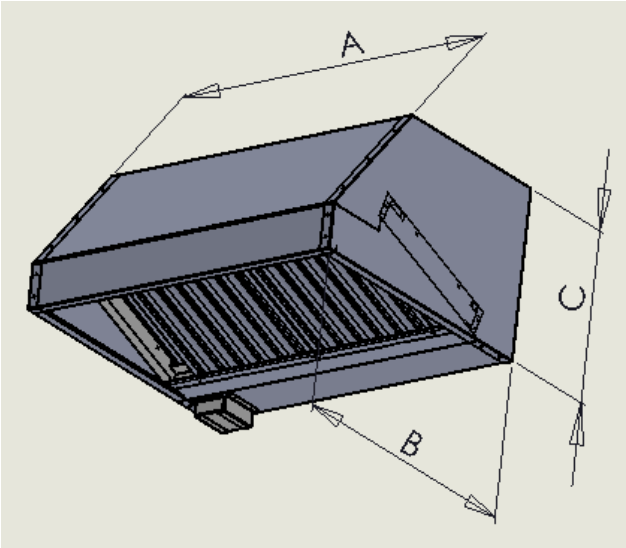

General Type Canopy

Suitable for small to medium duty kitchens

Canopy Codes	Dimensions A x B x C	Weight
GT1010	1000 x 1000 x 600	32Kg
GT1210	1200 x 1000 x 600	36Kg
GT1510	1500 x 1000 x 600	45Kg
GT1810	1800 x 1000 x 600	65Kg
GT2110	2100 x 1000 x 600	74Kg
GT2410	2400 x 1000 x 600	84Kg

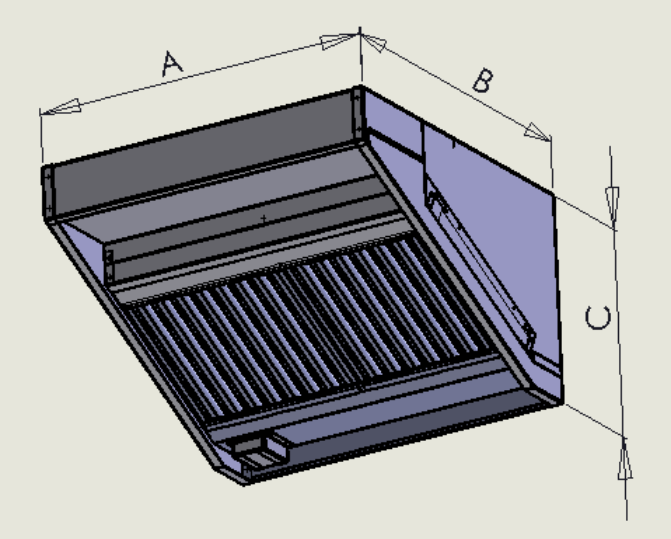

Titan Type Canopy

Suitable for medium to large duty kitchens

Canopy Code	Dimensions A x B x C	Weight
TT1275	1000 x 1200 x 750	38Kg
TT1275	1200 x 1200 x 750	43Kg
TT1575	1500 x 1200 x 750	52Kg
TT1875	1800 x 1200 x 750	72Kg
TT2175	2100 x 1200 x 750	81Kg
TT2475	2400 x 1200 x 750	91Kg

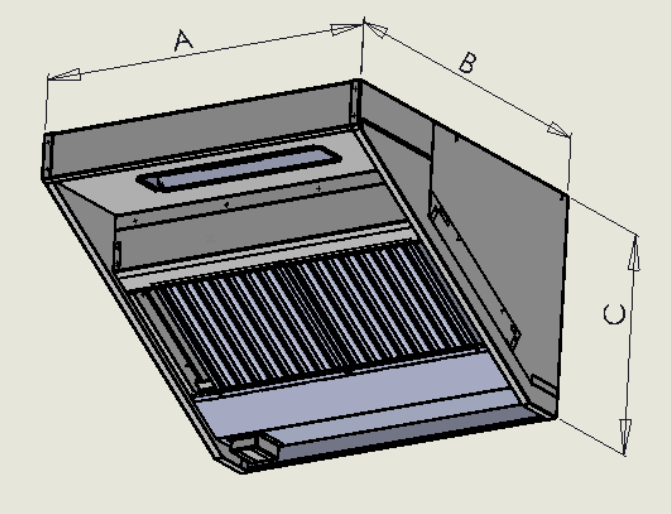

How to join canopies together to form a run

Sometimes a kitchen scheme may necessitate a series of canopies that can be bolted together onsite to create one large canopy. This can be done to achieve a special length of canopy, or because access to site is limited. Parry offer it's customers the opportunity to do this by providing cut outs to the side panels of the canopy, and fixing holes to allow one canopy to be bolted to another.

Simply state when placing your order that you require the canopies to be joined together in a single run.

General Type Canopy

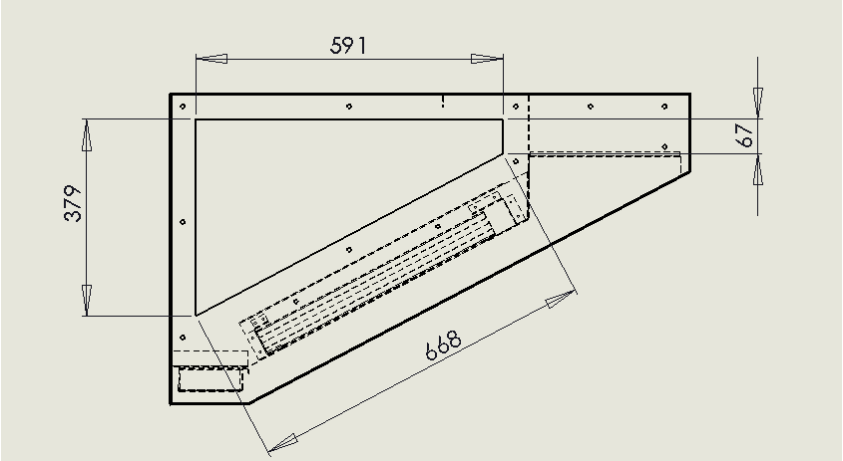

The diagram above shows an example of the side profile of the general type canopy range with cut out and bolt holes. This is available in all styles of canopy.

Please note that if canopies are to be joined together in this fashion it is the responsibility of the installer to ensure that the canopy has adequate ducting to maintain the airflows required through the canopy, and comply with all current regulations. It may be the case that air will need to be ducted out of the canopy at several points along its entire length.

Standards for installing extraction canopies

There are many considerations that must be taken into account when specifying a canopy for a kitchen for example:

- Size of room
- Appliances positioned underneath and around the kitchen
- Location of doors and windows
- Type of fan
- Air flow
- Rating
- Length and positioning of ducting
- Noise
- Smell
- Health and safety

To help decide which size and type of canopy you require for your installation there are a number of standards and recommendation documents available.

The Heating and Ventilating Contractors Association have provided a series of specification documents for canopy installation including:

- HVCA Specification for Kitchen Ventilation Systems DW/172

The British Standards that regulate gas catering appliances also specify the type of canopy that should be used with that appliance and should be consulted.

Health and safety regulations will also have reference to ensuring that an area that contains catering equipment has sufficient ventilation and air circulation.

Positioning canopies

The size of the canopy installed in a kitchen will be specified by the equipment which is being situated below it. The standard DW/172 states that “Unless restricted by walls, the plan dimensions of the canopy will always exceed the plan dimensions of the catering equipment by a minimum of 250mm on each free side and by 250mm front and rear.”

The diagram below shows this:

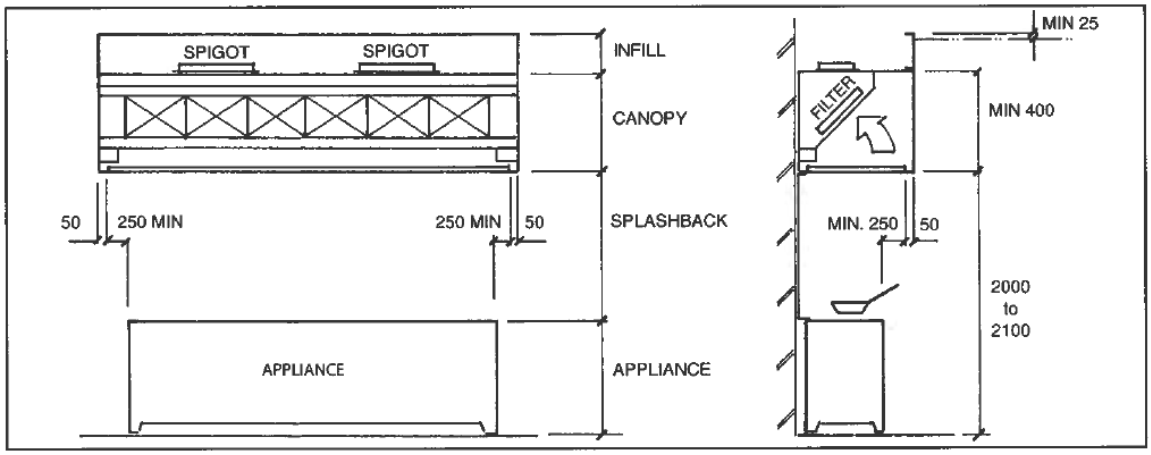

Typical Canopy Dimension diagram, taken from DW/172 Specification for Kitchen Ventilation.

Canopy code	Maximum depth of unit that can be positions underneath it.
Snack Type	560mm
General Type	750mm
Titan Type	950mm

Safety instructions for fitting a canopy

IMPORTANT, PLEASE READ INSTRUCTIONS FULLY BEFORE USE

Parry canopies have been designed to be fitted in a kitchen over an appliance, as part of an extraction solution. Please note that it is the responsibility of the architect/ customer to specify the correct size and capacity extraction unit for their particular situation, and this must be done and fitted in accordance with the regulations in force with particular attention paid to the Health and Safety at Work Act

- All appliances other than those fitted with a sealed moulded plug must be fitted by a qualified electrician, in accordance with current regulations.
- To prevent shocks, all appliances whether gas or electric, must be earthed.
- To avoid scratching the highly polished exterior surface of this equipment whilst in transit, the protective film on the exterior surfaces has NOT been removed.
- It is IMPORTANT that this protective film is peeled off before the equipment is used.
- Ensure the unit is isolated from the power supply before installing, cleaning or maintaining any part of the extraction canopy.
- All gas appliances should be installed by a registered fitter in accordance with current regulations
- Canopies in the range due to their size, or the fact they may contain internal fans, can be heavy. Take care when moving them. We would advise fitting the canopy to the wall or overhead beam, requires a minimum of two people.

Canopy Installation Instructions

All gas appliances and gas interlock systems must be installed and commissioned by a registered gas safe fitter. Electrical products, and the wiring of lights and speed controllers must be fitted by an electrician. All ventilation ducting must be installed to comply with currents standards and building regulations.

Parry offer a range of sizes of canopies. If a customer requires a canopy that is longer than 2400mm, several canopies can be joined together. Baffle filters and fixing bolts to attach the canopies together are supplied with the unit. Any fixings for hanging the canopy on to the wall must be sourced by the customer / installer and the fixings used should be suitable for the wall type that the canopy is being fixed to. Canopy Lights are sold separately.

- Remember that a canopy is flexible and must be handled carefully.
- Each construction site is different and fixings must be designed to suit each installation.
- The preferred and safest way to assemble and raise a large canopy is to prepare a large temporary wooden raft placed on a flat floor, on this raft the canopy may be assembled, this way minimises distortion when assembling.
- The canopy can be lifted up on the raft and exactly positioned by lifting from below or by pulley blocks from above.
- The canopy can then be fixed to the building structure in such a way that the canopy weight is uniformly distributed.
- To avoid distortion of the canopy or tearing under its own weight it may be necessary to use spreader plates on the canopy.
- When all fixings are in place level up the canopy and tighten all fixings. (note that a drip tray is located to one side under the canopy, by fixing the canopy at a slight angle will improve the draining of grease into the drip tray)
- The weight of the ducting and fan should not be placed on the canopy.
- The fan and ducting must have their own fixing.

- Should vibration occur adjusting the fixing will help.
- The canopy must have a minimum of 3 fixing per section.
- Since all sites vary the ventilation outlet should be cut on site.

Internal fan

For canopies that have internal fans please ensure the fan is in the correct position before attempting to mount the canopy to a wall.

The centrifugal fan used within the internal fan packs draws air from both sides, so to work most effectively it has to be located centrally to give an even draw across the length of the canopy. In the longer lengths two fans maybe required and these are spread equally a third of the way along the canopy length. Canopies with two fans require two sets of ducting, or a non return valve.

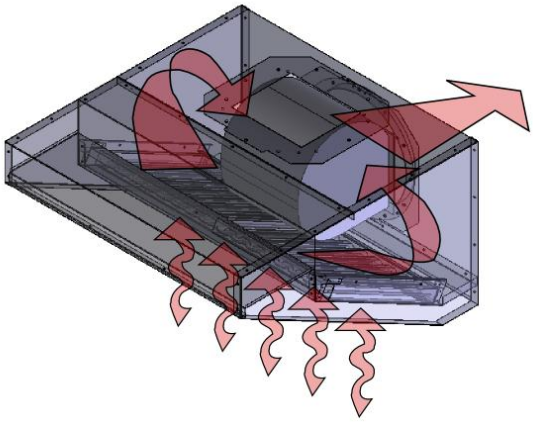

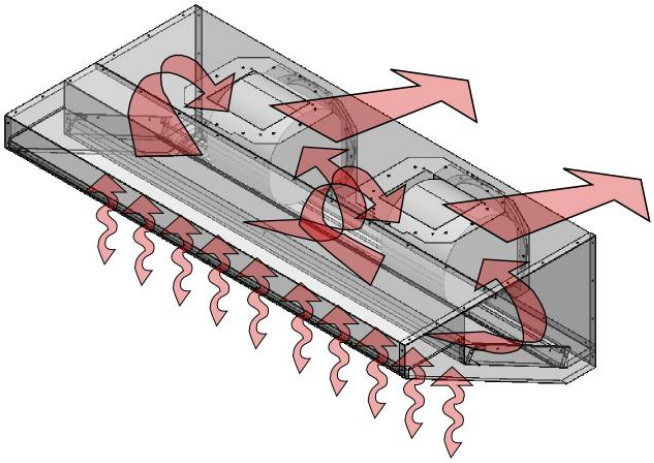

Repositioning the Internal Fan

As standard, canopies with internal fans will have the fan mounted to duct out of the centre back of the canopy as shown in figure 1. However if required the fan can be moved to duct out of the centre top of the canopy as shown in figure 2.

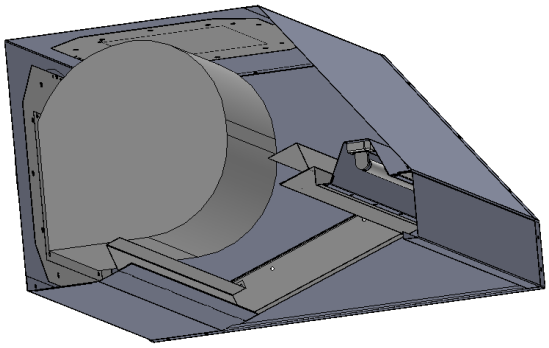

Figure 1

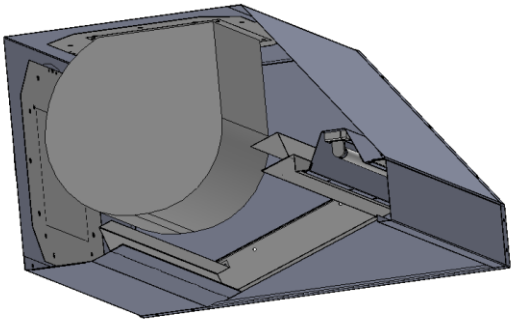

Figure 2

Please note that by removing the baffle filters and filter spacers by lifting and dropping them out of the channels you should be able to have just enough room to unbolt the fan and reposition it.

The fan is bolted to a plate with a square hole in it, using four pieces of threaded bar. The plate is then bolted to the canopy through the same holes as the flange.

To block off the holes in the canopy that are not being used, there is another plate, this time solid. It contains the same fixing holes as the fan plate, so can simply be bolted to the canopy in exactly the same way, making the two plates interchangeable.

If you do need to move the position of your fan please note that it will only fit in one way round. When located on the back, the flat side of the fan is facing downwards and when mounted on the top the flat side is facing forward as illustrated above.

Please ensure that all the bolts are securely tightened before hanging the canopy on the wall.

An earth tag has been provided and we would recommend that all units are earthed.

Information about the rating of the fan can be found on a label on the left inner side of the canopy. We would recommend you use this label to record the information relating to the canopy installation as it is commissioned.

External fan

Parry offer all of their canopies with the option of an external fan packs. These are especially useful for difficult applications, long runs, and runs with a change in direction.

The external fan pack consists of a duct mount fan sized to the length of canopy, a pair of flanges, and a speed controller.

Canopies with external fans, give the installer greater flexibility as to where the ducting can be mounted. Usually the installer would cut the hole in the canopy to suit where the ducting needs to be, however if stated with precise dimensions, holes can be cut into the canopy at the factory at an extra cost.

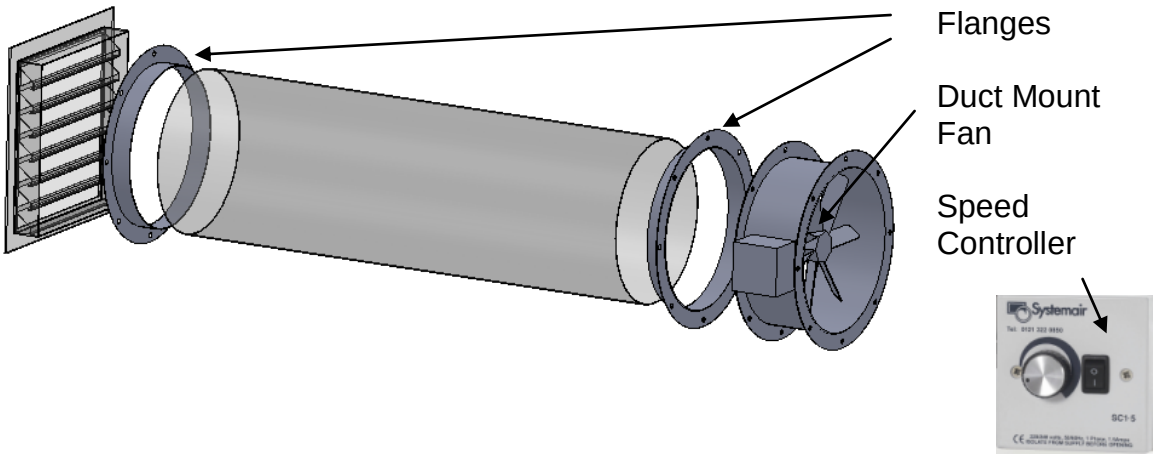

Parry does not supply any ducting and it is the responsibility of the installer to ensure that extraction ducting complies with all current standards. External weather louvered panels are not supplied as standard but can be bought separately from Parry. Parry can also supply reducers if you want to change the diameter of ducting leading away from the fan.

Hanging the canopy on a wall

The method chosen to hang the canopy to a wall or ceiling will depend greatly on the type and material of the wall or ceiling. It is the responsibility of the installer to check the structure is strong enough for the weight of the canopy and to use appropriate fixings.

If a canopy has been supplied on a stand or mounted to a table it may still need to be tied to a wall or ceiling for rigidity.

1. Choose a suitable position for your unit taking into consideration ducting, the location of units underneath it, and current standards. Do not butt the unit up against another unit which will get hot. Do not let the position of the unit blank off any ventilation vents on any other adjacent units.

2. Remove all protective film and packing material.

3. Holes can be drilled through the back or top of the canopy to screw directly to a wall or ceiling. In some circumstances it may be beneficial to run a baton along the wall for the unit to sit onto, as well as screwing directly into the wall.

4. If in the case of a condensate canopy the unit may be suspended from the ceiling with chain. Take steps to prevent the canopy from swaying, which could happen as doors into the room are opened and closed.

5. Please note that on each canopy a fat collection tray may be situated to one side of the unit, and on condensate canopies a drain valve is located in one corner. To help the liquid flow into the drain or tray, it is best to fix the unit at a slight angle.

Speed Controllers

All fans in canopies are required to be fitted with a speed controller. The table below shows the fans we supply and the appropriate matching speed controller.

Type of Fan	Number of fans	Speed controller
RG FANZSC315-41	1	RG CONTRSC1.5
RG FANZSC400-41	1	RG CONTRSC3.0
RG FANZSC450-41	1	RG CONTRSC5.0
RG FANZSC500-41	1	RG CONTRSC5.0
RG FANDD7-7	1	RG CONTRSC3.0
RG FANDD9-9	1	RG CONTRSC5.0
RG FANDD9-9	2	RG CONTRTRE12

Maintenance Instructions

The kitchen manager should ensure that the internal sections of the canopy are inspected regularly and cleaned to prevent a build up of grease which could start a fire.

Filters MUST be washed regularly. (For more information on how this can be done easily with a filter sterilization unit see the filter section.)

Filters are easily removable for cleaning by simply holding on to the handles and sliding the filter up into the unit allowing the bottom of the filter to drop forwards out of the unit. Care should be taken when removing filters as generally the unit will be mounted high up on a wall over catering appliances.

All Parry canopies are fitted with a drip tray. The drip tray is easily removable and must be emptied regularly.

The unit should be wiped down regularly with warm soapy water and a soft cloth.

Filter Specification

In accordance with current regulations Parry fit baffle filters as standard in all of the canopy ranges. There are two sizes of filters 400mm square and 500mm square.

The pressure drop across the filters on any canopy using the 400mm or 500mm baffle filters is a total of 50 pascals across the unit.

The Snack type canopy range use the 400mm filter and the General and Titan type use the 500mm.

Parry also supply as a spare 430 x 430 mm mesh filters, to anyone who has an old mesh filter canopy.

Filters must be washed regularly and drip trays mounted under the unit should be emptied and the Canopy wiped down.

Parry can offer a filter sterilization unit to make the process of cleaning filters much easier. The unit consists of a tank which cleaning fluid can be poured into, and filters submerged in.

For more information contact the Parry Group

External Fan Value Pack Specification

Value Canopy Packs include a canopy, voltage controller a fan and connecting spigot.

The fans have been specified to be used with a maximum of 12m of ducting with two 90 degree bends.

The fans are rated to an IP rating of IP54 (Dust and splashes)

Canopy Length	Single Phase	Filters 400 mm	Filters 500 mm	Fan Spec	Flow m³/sec	Rating kW	Controller	Pair flanges Code	Ducting size mm
1000mm	13AMP	2	2	ZSC315-41	0.4	0.13	SC1.5	8895	350
1200mm	13AMP	3	2	ZSC315-41	0.4	0.13	SC1.5	8895	350
1500mm	13AMP	3	3	ZSC400-41	0.9	0.31	SC3.0	8897	400
1800mm	13AMP	4	3	ZSC450-41	1.3	0.51	SC5.0	8898	450
2100mm	13AMP	5	4	ZSC450-41	1.3	0.51	SC5.0	8898	450
2400mm	13AMP	6	4	ZSC500-41	1.9	0.77	SC5.0	8899	500

Duct Mounted Fans

Parry sell duct mounted fans as part of the Canopy Value Pack.
Features of the duct mount short cased axial fans:

- Sickle & aerofoil bladed fans, 315mm to 500mm
- Fan - single phase, 230V - 1Ph - 50Hz
- Diecast aluminium impellers
- Insulation class 'F' IP54
- Operating range -40ºC to 70ºC
- Thermal protection 'TK'
- Galv steel casing with flanges
- Corrosion resistant paint pebble Grey,
- Inlet guard
- IP54 terminal box
- Maintenance free, sealed for life bearings

Single Phase Product Code	Speed rpm	Airflow m³/sec @ Static Pressure PA			Motor Data			Weight	dBA @	Speed Control	
		50 Pa	100 Pa	125 Pa	FLC	SC	kW	Kg	3m	Elec	Trans
ZSC315-41	1400	0.5			0.59	1.5	0.13	6.5	46	SC 1.5	RE 1.5
ZSC400-41	1320	1.143	0.888	0.626	1.32	2.9	0.31	10.3	51	SC 3.0	RE 3.0
ZSC450-41	1310	1.805	1.509	1.31	2.8	7	0.61	15.8	55	SC 3.0	RE 3.0
ZSC500-41	1210	2.248	1.876	1.61	3.4	7.4	0.77	16.6	53	SC 3.0	RTRE 3.0

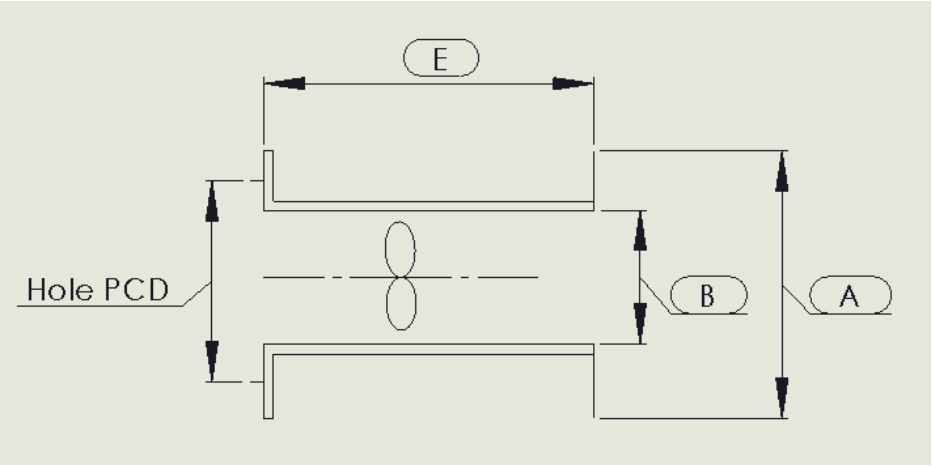

Number of filters	Fan	Controller	2 Flange	Dimensions				Number of holes
				E	B	A	PCD	
1	ZSC315-41	YES	YES	135	317	382	356	8
2	ZSC400-41	YES	YES	155	400	466	438	12
3	ZSC450-41	YES	YES	160	451	515	487	12
4	ZSC500-41	YES	YES	165	503	567	541	12

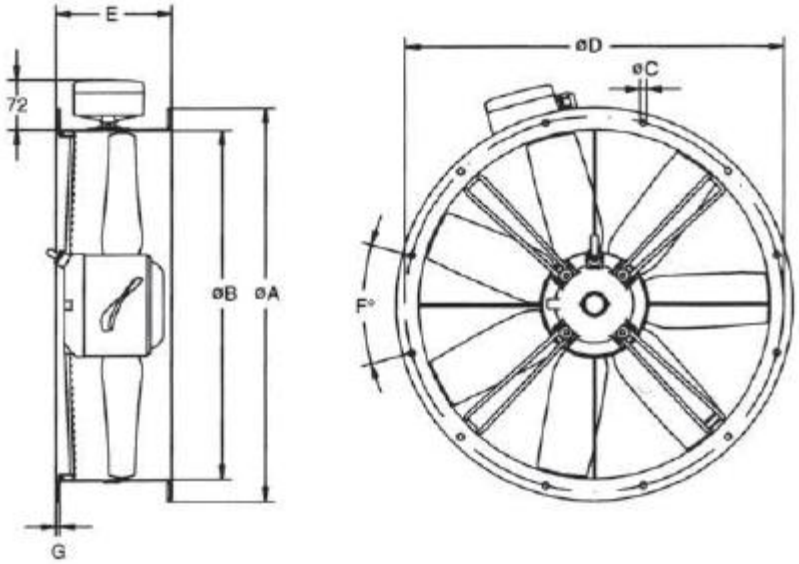

Size	ØA	ØB	ØC	ØD	E	ØF	G	kg
315	382	317	9.5	356	135	8	6	6.5
400	466	400	9.5	438	155	12	6	10.3
450	515	415	9.5	487	160	12	6	15.8
500	567	503	9.5	541	165	12	6	16.6

Wiring diagram

For the following models:
ZSC315-41 / ZSC400-41 / ZSC450-41 / ZSC500-41

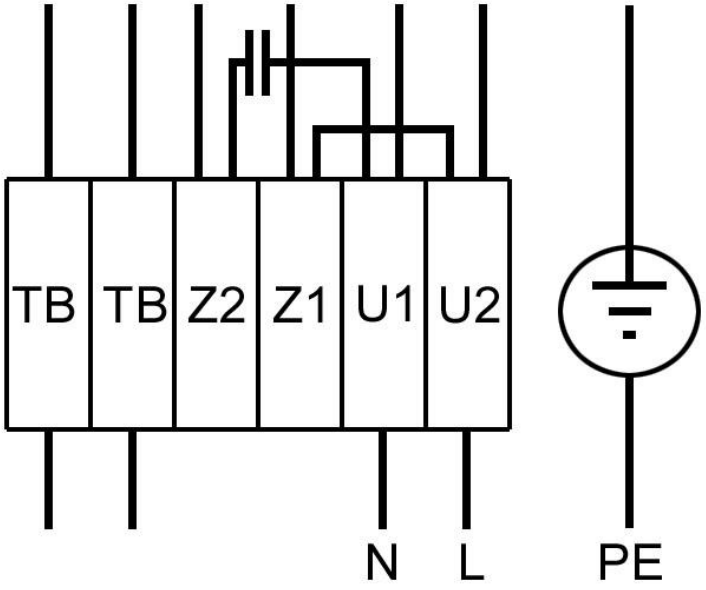

Wiring Colours
U1 = brown
U2 = blue
Z1 = black
Z2 = orange
TB = white

Parry Canopy Specification for Duct Mounted Fans

					Filter Specification				External fan Specification					Flange		Speed Controller		
Product Code	Width	Depth	Height	Draw through canopy (m/s)	Qty	Width	Depth	Height	Qty	Fan Code	Motor Rating (W)	Maximum Air flow (m3/s)	Qty	Flange Code	Flange size	Qty	Speed Controller Code	Amps
ST1050EF	1000	810	500	0.405	2	400	50	400	1	RG FANZSC315-41	0.13	0.40	1	RG FLANGE8895	315	1	RG CONTRSC1.5	1.5
ST1250EF	1200	810	500	0.486	3	400	50	400	1	RG FANZSC315-41	0.13	0.40	1	RG FLANGE8895	315	1	RG CONTRSC1.5	1.5
ST1550EF	1500	810	500	0.6075	3	400	50	400	1	RG FANZSC400-41	0.31	0.90	1	RG FLANGE8897	400	1	RG CONTRSC3.0	3
ST1850EF	1800	810	500	0.729	4	400	50	400	1	RG FANZSC450-41	0.51	1.30	1	RG FLANGE8898	450	1	RG CONTRSC5.0	5
ST2150EF	2100	810	500	0.8505	5	400	50	400	1	RG FANZSC450-41	0.51	1.30	1	RG FLANGE8898	450	1	RG CONTRSC5.0	5
ST2450EF	2400	810	500	0.972	6	400	50	400	1	RG FANZSC500-41	0.77	1.90	1	RG FLANGE8899	500	1	RG CONTRSC5.0	5
GT1010EF	1000	1000	600	0.5	2	500	50	500	1	RG FANZSC315-41	0.13	0.40	1	RG FLANGE8895	315	1	RG CONTRSC1.5	1.5
GT1210EF	1200	1000	600	0.6	2	500	50	500	1	RG FANZSC315-41	0.13	0.40	1	RG FLANGE8895	315	1	RG CONTRSC1.5	1.5
GT1510EF	1500	1000	600	0.75	3	500	50	500	1	RG FANZSC400-41	0.31	0.90	1	RG FLANGE8897	400	1	RG CONTRSC3.0	3
GT1810EF	1800	1000	600	0.9	3	500	50	500	1	RG FANZSC450-41	0.51	1.30	1	RG FLANGE8898	450	1	RG CONTRSC5.0	5
GT2110EF	2100	1000	600	1.05	4	500	50	500	1	RG FANZSC450-41	0.51	1.30	1	RG FLANGE8898	450	1	RG CONTRSC5.0	5
GT2410EF	2400	1000	600	1.2	4	500	50	500	1	RG FANZSC500-41	0.77	1.90	1	RG FLANGE8899	500	1	RG CONTRSC5.0	5
TT1275EF	1200	1200	750	0.72	2	500	50	500	1	RG FANZSC315-41	0.13	0.40	1	RG FLANGE8895	315	1	RG CONTRSC1.5	1.5
TT1575EF	1500	1200	750	0.9	3	500	50	500	1	RG FANZSC400-41	0.31	0.90	1	RG FLANGE8897	400	1	RG CONTRSC3.0	3
TT1875EF	1800	1200	750	1.08	3	500	50	500	1	RG FANZSC450-41	0.51	1.30	1	RG FLANGE8898	450	1	RG CONTRSC5.0	5
TT2175EF	2100	1200	750	1.26	4	500	50	500	1	RG FANZSC450-41	0.51	1.30	1	RG FLANGE8898	450	1	RG CONTRSC5.0	5
TT2475EF	2400	1200	750	1.44	4	500	50	500	1	RG FANZSC500-41	0.77	1.90	1	RG FLANGE8899	500	1	RG CONTRSC5.0	5

TELEPHONE: SERVICE (44) 01332 875665
FAX: SERVICE (44) 01332 875536

Cut out positions for attaching duct and spigots

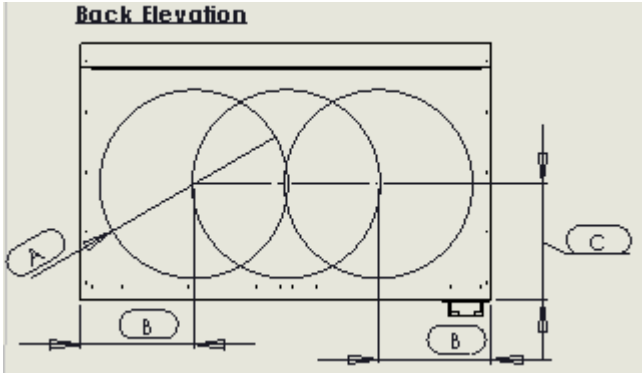

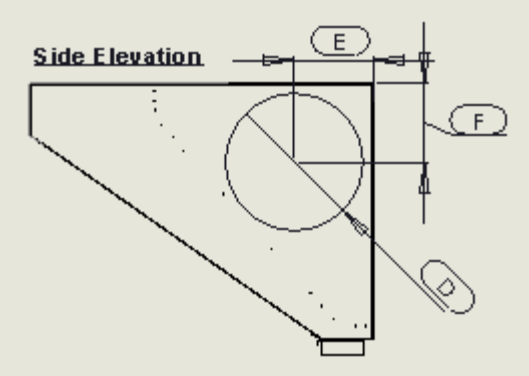

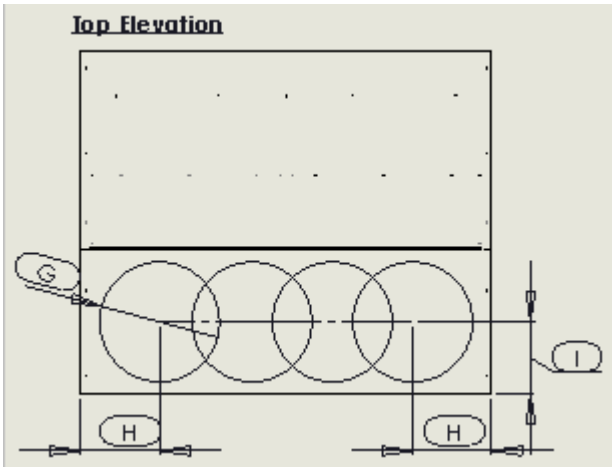

A – Maximum cut out diameter
B – Minimum distance from edge to hole centre.
C – Minimum distance from edge to hole centre.
D – Maximum cut out diameter
E – Minimum distance from edge to hole centre.
F – Minimum distance from edge to hole centre.
G – Maximum cut out diameter
H – Minimum distance from edge to hole centre.
I – Minimum distance from edge to hole centre.

	Back Elevation			Side Elevation			Top Elevation		
Canopy Range	A	B	C	D	E	F	G	H	I
Snack Type	400	265	250	315	200	185	400	265	250
General Type	400	265	250	315	200	200	400	265	262
Titan Type	500	322	331	400	240	240	500	322	320

TELEPHONE: SERVICE (44) 01332 875665
FAX: SERVICE (44) 01332 875536

Silencer Noise Reduction

If the noise generated by the fan in an extraction canopy is causing a problem in terms of noise either inside or outside the kitchen, a silencer can be purchased which when fitted correctly will reduce the noise generated by the fan.

ZSC Fan noise levels with silencer noise reductions

Fan ref	Fan Noise Level	Resultant Noise Level with 1D ST Silencer	Resultant Noise Level with 1D POD Silencer	Resultant Noise Level with 2D ST Silencer	Resultant Noise Level with 2D POD Silencer
ZSC315-41	46 dBA	39 dBA	36 dBA	34 dBA	32 dBA
ZSC400-41	51 dBA	44 dBA	41 dBA	39 dBA	37 dBA
ZSC450-41	55 dBA	48 dBA	45 dBA	43 dBA	41 dBA
ZSC500-41	53 dBA	46 dBA	43 dBA	41 dBA	39 dBA

1D ST is one fan diameter long without a centre pod
1D POD is one fan diameter long with a centre pod
2D ST is two fan diameters long without a centre pod
2D POD is two fan diameters long with a centre pod

All noise levels are measured at a distance of 3 metres

TELEPHONE: SERVICE (44) 01332 875665
FAX: SERVICE (44) 01332 875536

Internal Direct Drive Centrifugal Fans

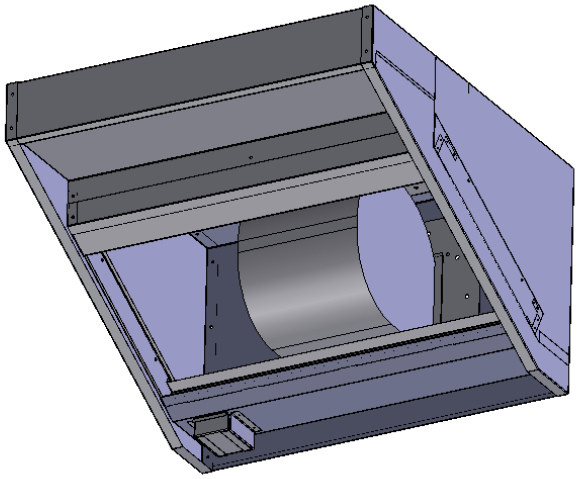

Parry offer a new range of canopies with internal fans. The internal fans used are centrifugal type fans.

Unless otherwise stated on an order, all canopies sold with internally mounted fans will have the fan extracting through the top panel. If the canopy contains one fan it will be fixed to the centre of the top panel if it has two or more fans they will be evenly spread along the length of the top panel.

If another position is required for the mounting of the fan this is possible at an additional charge. Please state the exact dimension at time of order.

Fan Code	Width of Blades (inch)	Diameter of Blades (inch)	Motor Rating (W)	Speed (rev/min)	Max Current (A)	Sound Pressure (dB (A))	Minimum Air Volume (m3/h)
FANDD7-7	7	7	92	1400	1.5	57	500
FANDD9-9	9	9	368	1400	3.8	61	750

Fan Code	Minimum Air Volume (m3/s)	Maximum Air flow (m3/h)	Maximum Air flow (m3/s)	Minimum External resistance (Pa)	Weight (Kg)	Electrical connection (V/ph/Hz)
FANDD7-7	0.14	1150	0.32	75	6.9	230/50/1
FANDD9-9	0.21	2300	0.64	260	14.2	230.50/1

TELEPHONE: SERVICE (44) 01332 875665
FAX: SERVICE (44) 01332 875536

Internal Fans Sizes

Fan	A	B	C	D	E
DD-7-7	320	228	293	205	270
DD-9-9	390	300	385	255	325

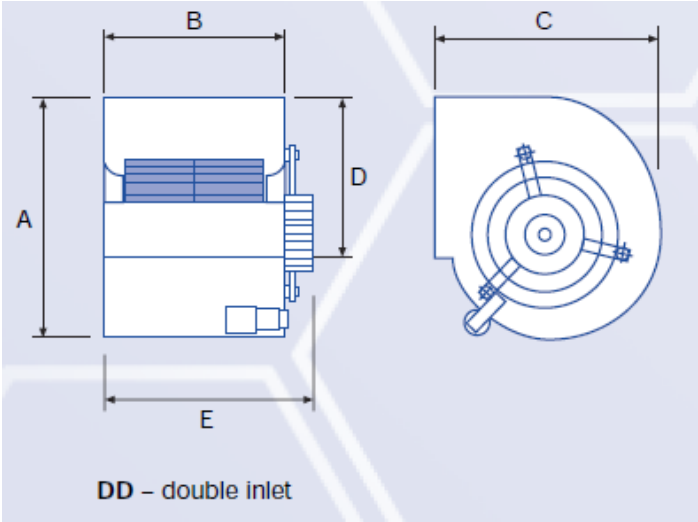

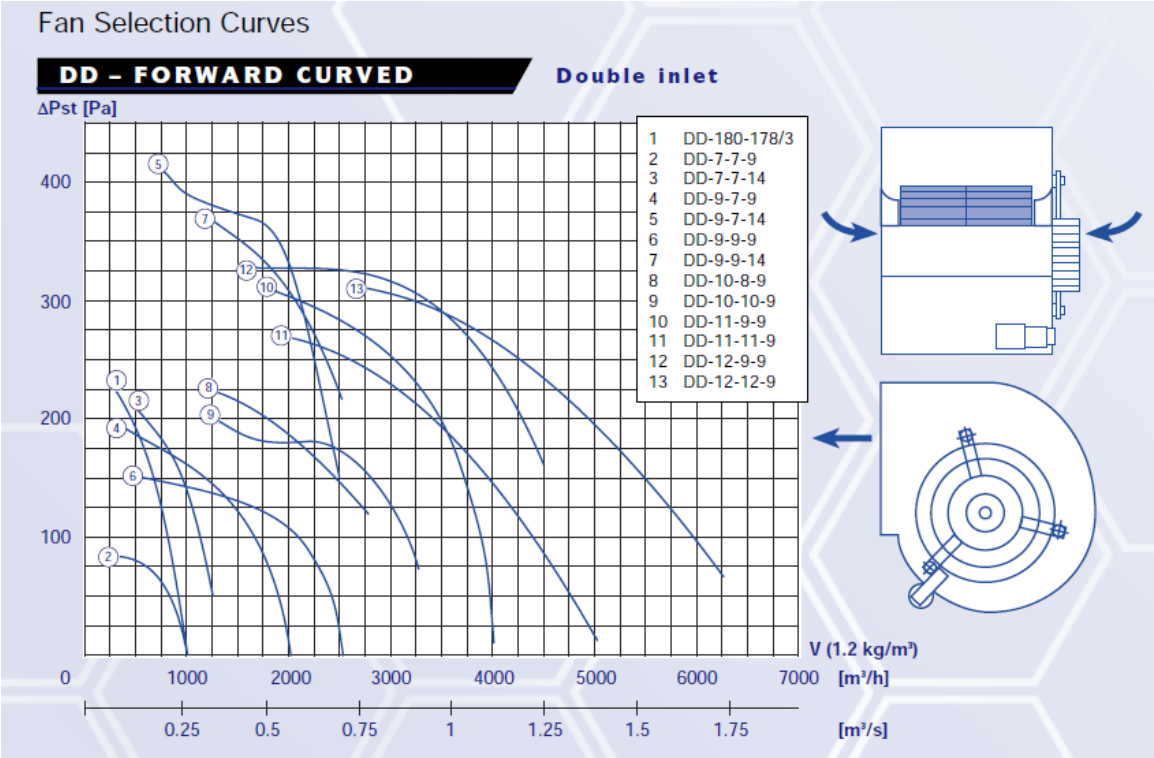

TELEPHONE: SERVICE (44) 01332 875665
FAX: SERVICE (44) 01332 875536

Parry Canopy Specification for Internal Centrifugal Fans

	Filter Specification				Internal Fan Specification				Speed Controller			Flange		
Product Code	Width	Depth	Height	Presure Drop pa	Qty	Fan Code	Motor Rating (W)	Maximum Air flow (m3/s)	Qty	Speed Controller Code	Amps	Qty	Flange Code	Flange size
ST1050IF	400	50	400	50	1	RG FANDD7-7	92	0.32	1	RG CONTRSC1.5	1.5	1	RG FLANGE8897	400
ST1250IF	400	50	400	50	1	RG FANDD7-7	92	0.32	1	RG CONTRSC1.5	1.5	1	RG FLANGE8897	400
ST1550IF	400	50	400	50	1	RG FANDD7-7	92	0.32	1	RG CONTRSC1.5	1.5	1	RG FLANGE8897	400
ST1850IF	400	50	400	50	1	RG FANDD7-7	92	0.32	1	RG CONTRSC1.5	1.5	1	RG FLANGE8897	400
ST2150IF	400	50	400	50	1	RG FANDD7-7	92	0.32	1	RG CONTRSC1.5	1.5	1	RG FLANGE8897	400
ST2450IF	400	50	400	50	2	RG FANDD7-7	92	0.64	1	RG CONTRSC5.0	5	1	RG FLANGE8897	400
GT1010IF	500	50	500	50	1	RG FANDD9-9	368	0.64	1	RG CONTRSC5.0	5	1	RG FLANGE 8897	400
GT1210IF	500	50	500	50	1	RG FANDD9-9	368	0.64	1	RG CONTRSC5.0	5	1	RG FLANGE 8897	400
GT1510IF	500	50	500	50	1	RG FANDD9-9	368	0.64	1	RG CONTRSC5.0	5	1	RG FLANGE 8897	400
GT1810IF	500	50	500	50	1	RG FANDD9-9	368	0.64	1	RG CONTRSC5.0	5	1	RG FLANGE 8897	400
GT2110IF	500	50	500	50	2	RG FANDD9-9	368	1.28	1	RG CONTRTE12	12	2	RG FLANGE 8897	400
GT2410IF	500	50	500	50	2	RG FANDD9-9	368	1.28	1	RG CONTRTE12	12	2	RG FLANGE 8897	400
TT1275IF	500	50	500	50	1	RG FANDD9-9	368	0.64	1	RG CONTRSC5.0	5	1	RG FLANGE 8897	400
TT1575IF	500	50	500	50	1	RG FANDD9-9	368	0.64	1	RG CONTRSC5.0	5	1	RG FLANGE 8897	400
TT1875IF	500	50	500	50	2	RG FANDD9-9	368	1.28	1	RG CONTRTE12	12	2	RG FLANGE 8897	400
TT2175IF	500	50	500	50	2	RG FANDD9-9	368	1.28	1	RG CONTRTE12	12	2	RG FLANGE 8897	400
TT2475IF	500	50	500	50	2	RG FANDD9-9	368	1.28	1	RG CONTRTE12	12	2	RG FLANGE 8897	400

TELEPHONE: SERVICE (44) 01332 875665
FAX: SERVICE (44) 01332 875536

SNACK TYPE CANOPY FAN APERTURE FOR INTERNAL FAN AND DUCTING

THIS DRAWING SHOWS THE POSITION OF THE CUT OUTS FOR THE MOUNTING OF AN INTERNAL FAN, AND DUCTING.

THIS DRAWING IS INTENDED FOR USE WITH THE FOLLOWING UNITS THAT ALL HAVE ONE FAN.
ST1050 IF
ST1250 IF
ST1550 IF
ST1850 IF
ST2150 IF

FANS ARE MOUNTED AS STANDARD EXTRACTING OUT THE BACK OF THE CANOPY. IF YOU WOULD LIKE TO CHANGE THE FAN POSITION SIMPLY UN BOLT THE FAN AND SWAP THE FAN PLATE, WITH THE BLANKING PLATE, ON THE TOP OF THE CANOPY.

TOP VIEW OF CANOPY

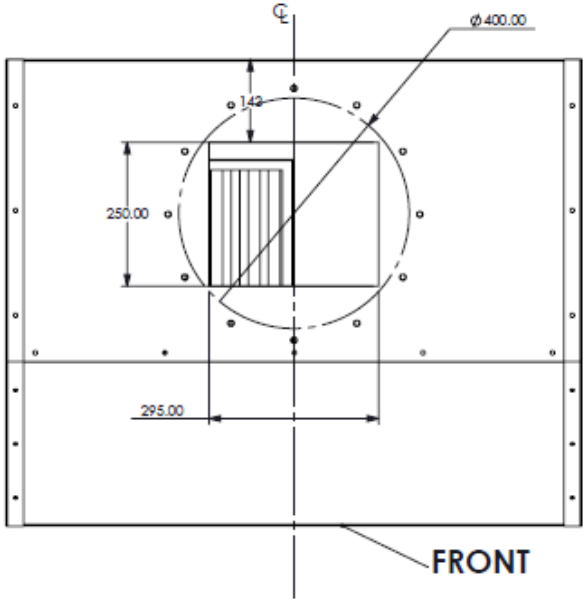

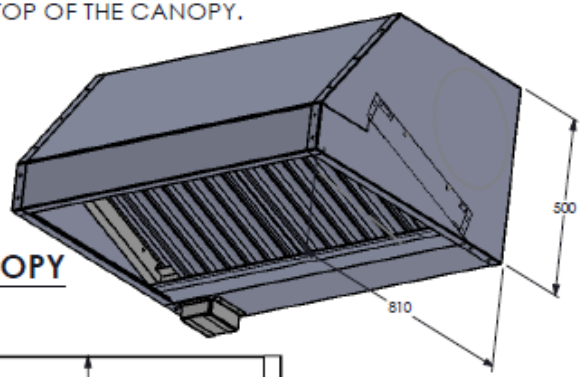

BACK VIEW OF CANOPY

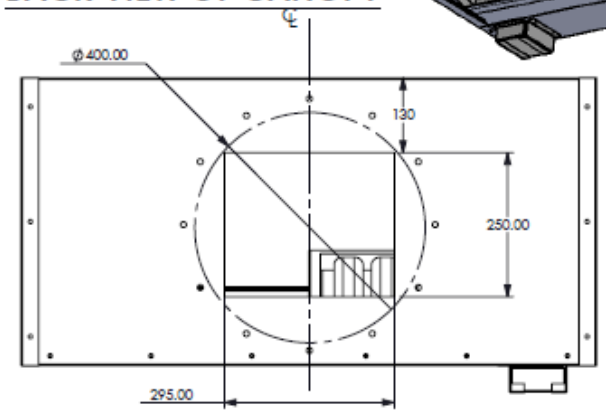

TELEPHONE: SERVICE (44) 01332 875665
FAX: SERVICE (44) 01332 875536

SNACK TYPE CANOPY FAN APERTURE FOR INTERNAL FAN AND DUCTING

THIS DRAWING SHOWS THE POSITION OF THE CUT OUTS FOR THE MOUNTING OF INTERNAL FANS AND DUCTING

THIS DRAWING IS INTENDED FOR USE WITH THE **ST2410 IF** WHICH HAS TWO FANS

TOP VIEW OF CANOPY

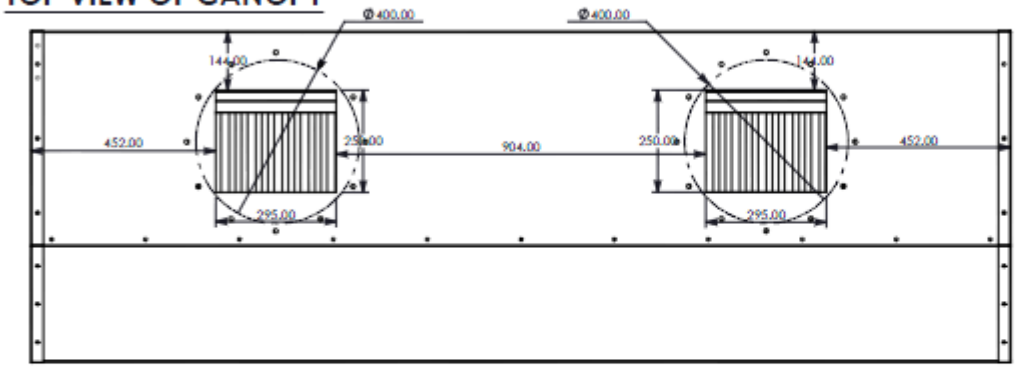

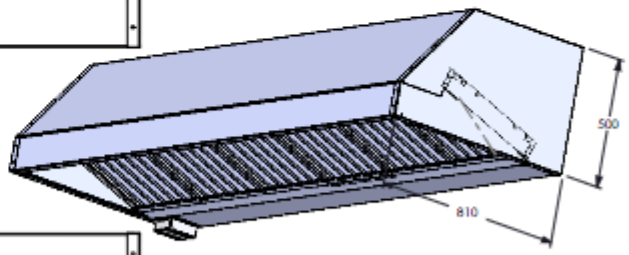

BACK VIEW OF CANOPY

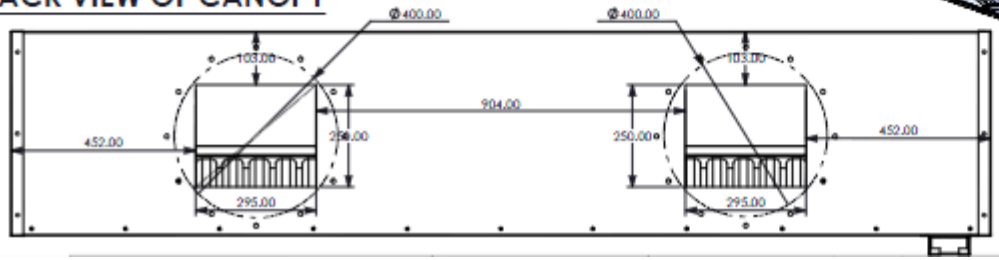

TELEPHONE: SERVICE (44) 01332 875665
FAX: SERVICE (44) 01332 875536

GENERAL TYPE CANOPY FAN APERTURE FOR INTERNAL FAN AND DUCTING

THIS DRAWING SHOWS THE POSITION OF THE CUT OUTS FOR THE MOUNTING OF AN INTERNAL FAN, AND DUCTING

THIS DRAWING IS INTENDED FOR USE WITH THE FOLLOWING UNITS WHICH ALL HAVE ONE FAN
GT1010 IF
GT1210 IF
GT1510 IF
GT1810 IF

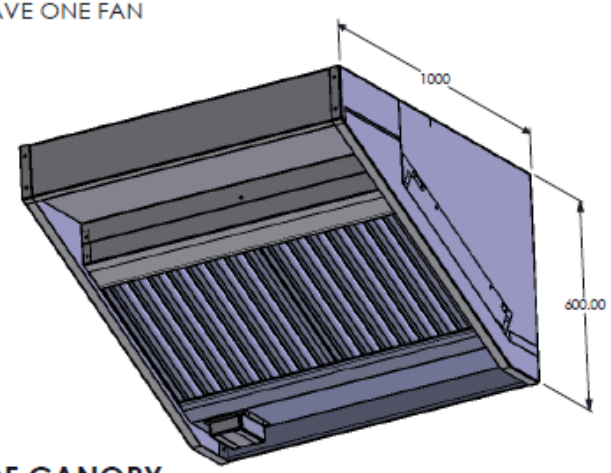

TOP VIEW OF CANOPY

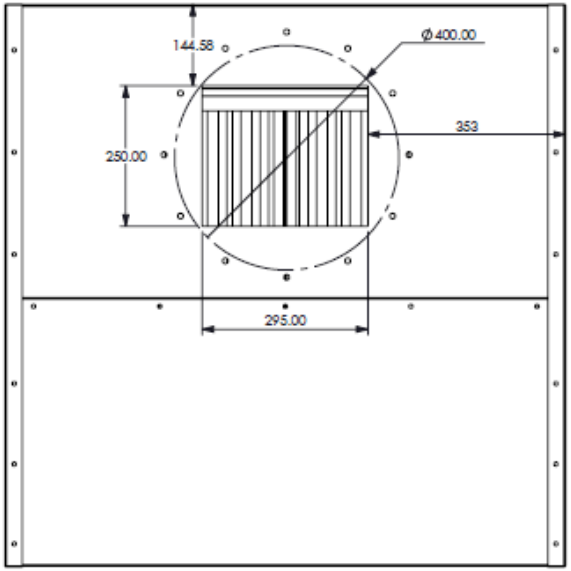

REAR VIEW OF CANOPY

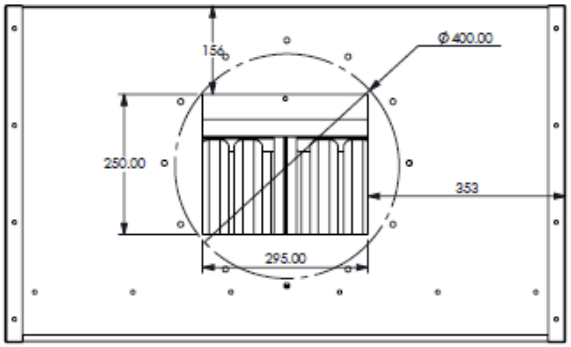

TELEPHONE: SERVICE (44) 01332 875665
FAX: SERVICE (44) 01332 875536

GENERAL TYPE CANOPY FAN APERTURE FOR INTERNAL FANS AND DUCTING

THIS DRAWING SHOWS THE POSITION OF THE CUT OUT FOR THE MOUNTING OF INTERNAL FANS AND DUCTING

THIS DRAWING IS INTENDED FOR USE WITH THE FOLLOWING UNITS ALL OF WHICH HAVE TWO FANS
GT2110 IF
GT2410 IF

TOP VIEW OF CANOPY

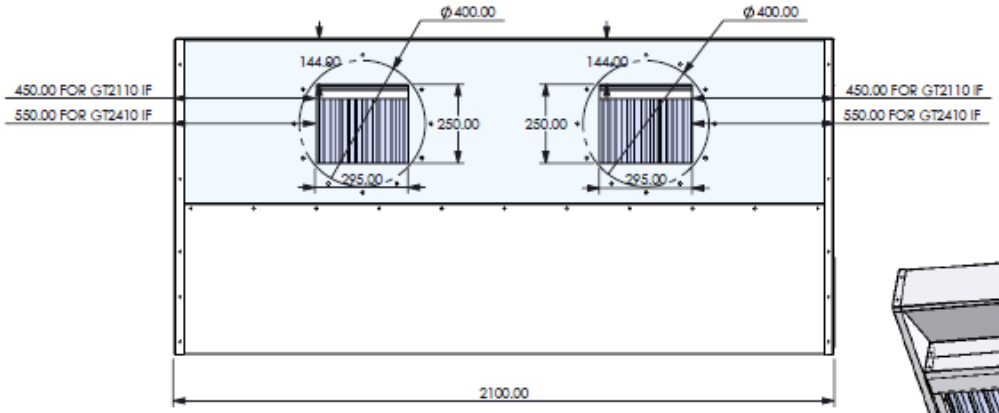

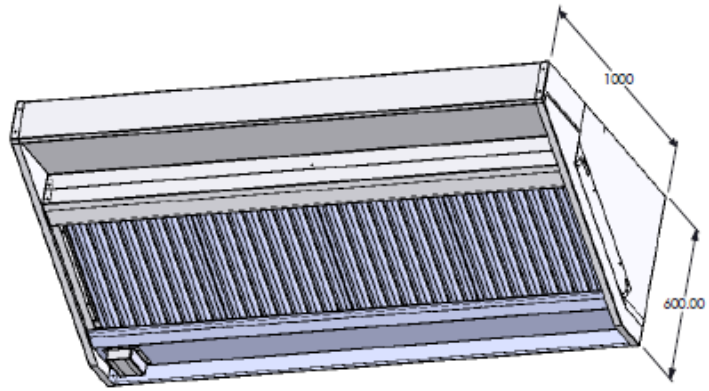

BACK VIEW OF CANOPY

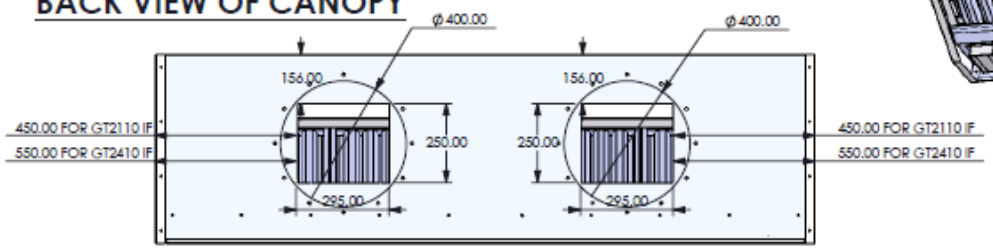

TELEPHONE: SERVICE (44) 01332 875665
FAX: SERVICE (44) 01332 875536

TITAN TYPE CANOPY FAN APERTURE FOR INTERNAL FAN AND DUCTING

THIS DRAWING SHOWS THE POSITION OF THE CUT OUTS FOR THE MOUNTING OF INTERNAL FANS AND DUCTING.

THIS DRAWING IS INTENDED FOR USE WITH THE FOLLOWING UNITS WHICH ALL HAVE ONE FAN
TT1250 IF
TT1550 IF

TOP VIEW OF CANOPY

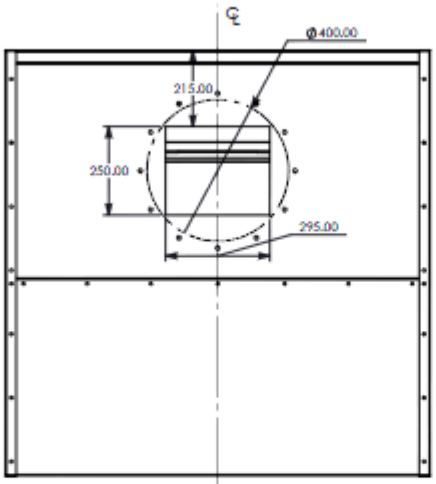

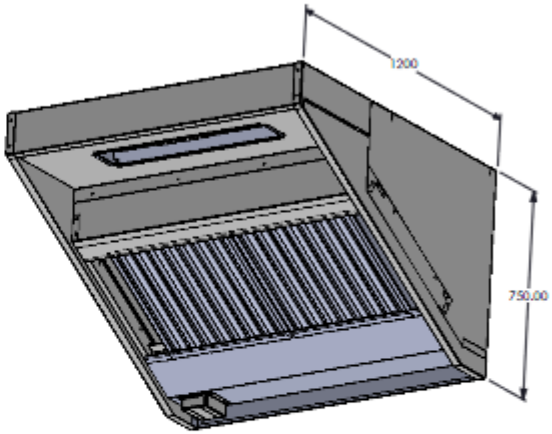

BACK VIEW OF CANOPY

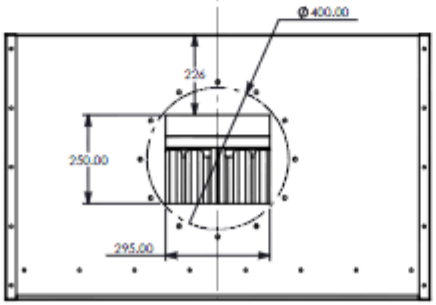

TELEPHONE: SERVICE (44) 01332 875665
FAX: SERVICE (44) 01332 875536

TITAN TYPE CANOPY FAN APERTURE FOR INTERNAL FAN AND DUCTING

THIS DRAWING SHOWS THE POSITION OF THE CUT OUTS FOR THE MOUNTING OF INTERNAL FANS AND DUCTING.

THIS DRAWING IS INTENDED FOR USE WITH THE FOLLOWING UNITS WHICH ALL HAVE TWO FANS
TT1875 IF
TT2175 IF
TT2475 IF

TOP VIEW OF CANOPY

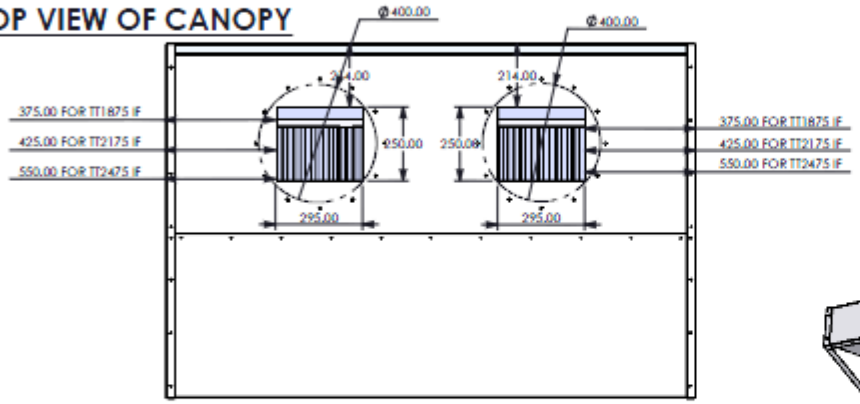

BACK VIEW OF CANOPY

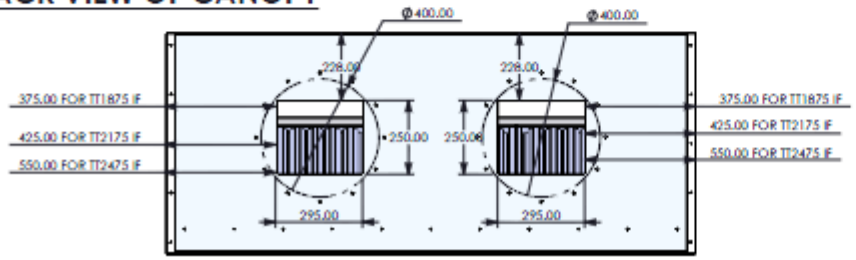

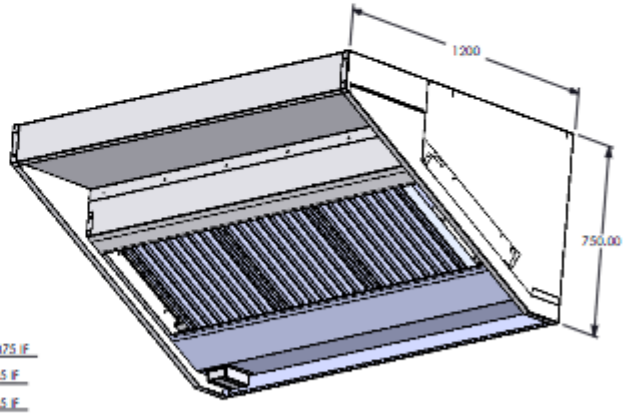

TELEPHONE: SERVICE (44) 01332 875665
FAX: SERVICE (44) 01332 875536

SC1 FAN SPEED CONTROLLER INSTRUCTIONS

For fans 0.1 – 1.5amps only

GENERAL

The units utilise triac phase cutting techniques and should be used with motors which have been approved by the manufacturers for speed control by this method. Control is best achieved with propeller, axial or centrifugal fan loads where absorbed power at full load corresponds to at least 90% of the motor's capacity.

SPECIFICATION

The SC1 is housed in a plastic enclosure rated to 1P40 and designed for continuous operation with 0.1 to 1.5 amp loads at 40°C ambient on single phase 220/240v 50/60Hz supply.

DIMENSIONS

88mm wide x 88mm high x 70mm deep

WARNING

1. Mains voltage is present. Care must be exercised when adjusting the internal potentiometer (M1N). It is the responsibility of the user to ensure compliance with the Health & Safety at Work Act, 1974.
2. Ensure that the motor is suitable for speed control with a triac device.

TELEPHONE: SERVICE (44) 01332 875665
FAX: SERVICE (44) 01332 875536

3. Ensure the motor run current does not exceed the rating of the controller.
4. Isolate mains supply before connecting.
5. This unit must be earthed.
6. All wiring must be in accordance with current lEE regulations.
7. Circuit Board Protection: Fuses in the units are for protection of the controllers' wiring and components in case of short circuits. They do not afford motor overload protection. Fuse size 3.15 amps.

ALL ELECTRICAL CONNECTIONS SHOULD BE CARRIED OUT BY A QUALIFIED ELECTRICIAN.

ELECTROMAGNETIC COMPATIBILITY AND GUARANTEE

Controls are fitted with integral filters and conform to the requirements of the EEC Directive 89/336/EEC and are CE marked accordingly. Testing of unit was conducted against the standard for Adjustable Speed Electrical Power Drive Systems EN 61800-3 1997 "unrestricted" (incorporating EN 61800-3 1996) and Harmonics FN 61000-3.

The CE mark remains valid only when the unit is correctly installed. It is the installers responsibility to ensure that guidelines are followed. It should be remembered that when two or more EMC compliant components are combined into a larger system the resulting system may not be compliant. Emissions from combined components may be additive. It is the EMC conformance of the final system which counts in law.

All products carry a two year guarantee when correctly connected to suitably specified fan motors.

TELEPHONE: SERVICE (44) 01332 875665
FAX: SERVICE (44) 01332 875536

WIRING THE CONTROL

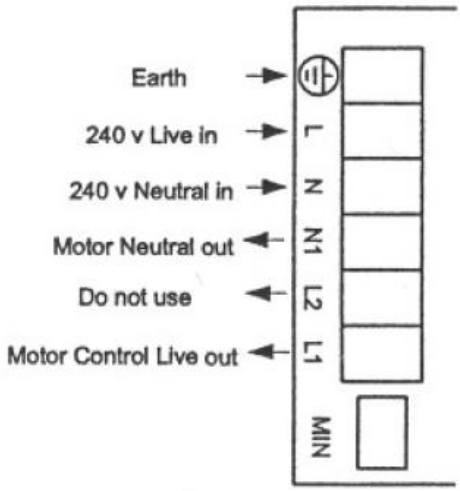

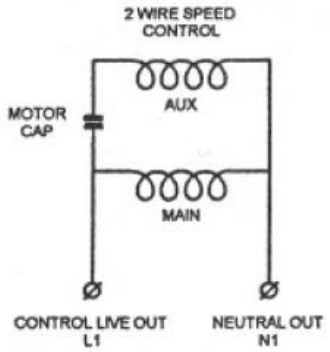

Terminal	Connection
⏚	Earth
L	220/240 volt 50/60 Hz Live in supply
N	220/240 volt 50/60 Hz Neutral in supply
N1	Motor Neutral Out
L2	Do not use
L1	Motor Control Live Out

SET UP AND RUNNING INSTRUCTIONS

1. Install the control in a well ventilated area where the ambient temperature does not exceed 40°C.
2. Ensure the control is securely mounted.
3. Route cables through the knock out holes at the bottom of the unit and ensure electrical connections are correct.
4. Switch on the mains supply. Switch on the speed controller.
5. Rotate the control knob from an anti-clockwise position to a clockwise position and check the fan accelerates to fill speed.
6. Minimum Speed - The minimum speed is preset and does not normally need adjusting. If this is necessary firstly ensure the control knob is set to minimum (filly anti-clockwise) then open the lid to access the potentiometer (MIN). Adjust as required. Beware of setting too low a value which could cause a stall condition on the fan.

TELEPHONE: SERVICE (44) 01332 875665
FAX: SERVICE (44) 01332 875536

SC3 & 5 FAN SPEED CONTROLLER INSTRUCTIONS

For fans SC3 up to 3amps and SC5 up to 5amps only

GENERAL

The units utilise triac phase cutting techniques and should be used with motors which have been approved by the manufacturers for speed control by this method.
Control is best achieved with propeller, axial or centrifugal fan loads where absorbed power at full load corresponds to at least 90% of the motor's capacity.

SPECIFICATION

Model Number	Maximum Continuous Running Current (Amps)	Fuse Size (Amps)
SC3	3	6.3
SC5	5	10

1. The SC3 and SC5 controls are designed for continuous operation, as shown in the above table, indicating maximum continuous load current at 40 degrees C ambient on single phase 220/240v 50Hz supply.
2. The normal equipment operating range is 0 degrees C to 40 degrees C ambient.
3. Component temperature range is -20 degrees C to +60 degrees C.

TELEPHONE: SERVICE (44) 01332 875665
FAX: SERVICE (44) 01332 875536

The SC3/5 series are housed in plastic boxes with aluminium front panel and are 1P40 rated. The front panel acts as a heatsink and is warm under normal operating conditions.

DIMENSIONS

87mm wide x 148mm high x 48mm deep

ELECTROMAGNETIC COMPATIBILITY AND GUARANTEE

Controls are fitted with integral filters and conform to the requirements of the EEC Directive 89/336/EEC and are CE marked accordingly. Testing of the units was conducted against the standard for Adjustable Speed Electrical Power Drive Systems EN 6 1800-3 1997 “unrestricted” (incorporating EN61800-3 1996) and Harmonics EN 61000-3.

The CE mark remains valid only when the unit is correctly installed. It is the installers responsibility to ensure that guidelines are followed. It should be remembered that when two or more EMC compliant components are combined into a larger system the resulting system may not be compliant. Emissions from combined components may be additive. It is the EMC conformance of the final system which counts in law.
All products carry a two year guarantee when correctly connected to suitable specified fan motors.

TELEPHONE: SERVICE (44) 01332 875665
FAX: SERVICE (44) 01332 875536

PCB LAYOUT

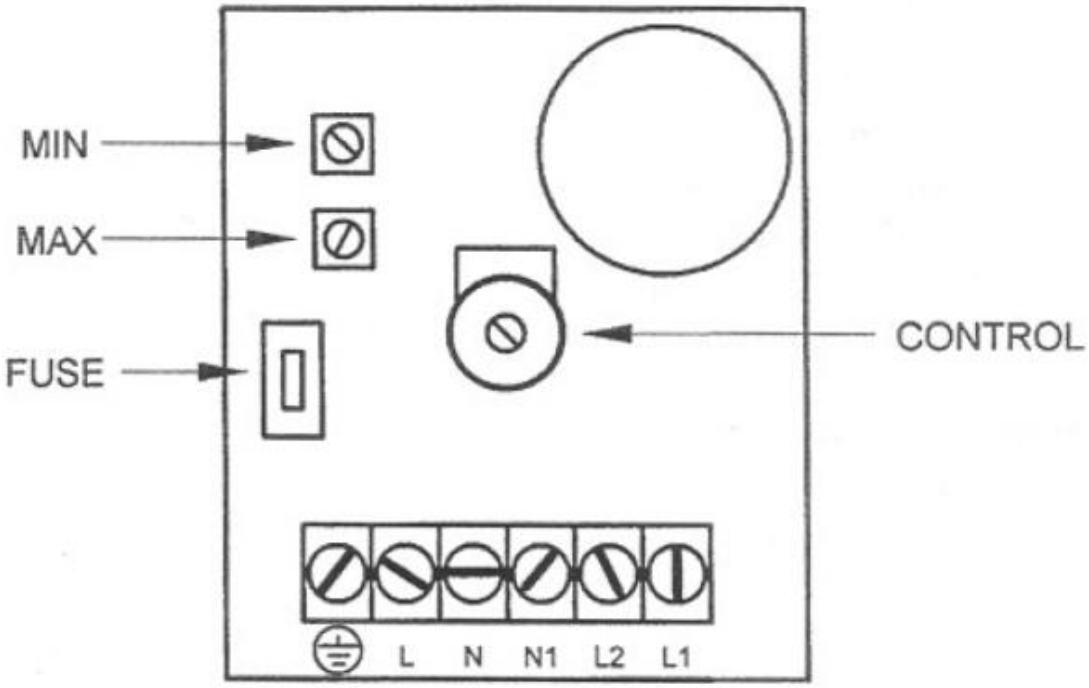

WIRING THE MOTOR

Motor wiring is shown below

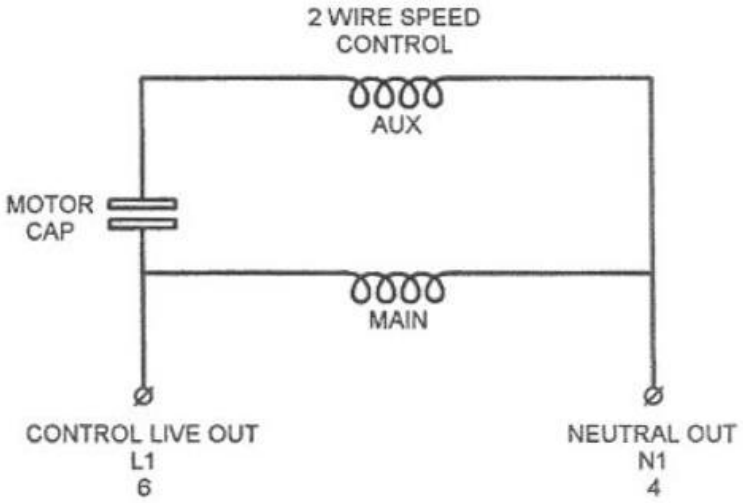

TELEPHONE: SERVICE (44) 01332 875665
FAX: SERVICE (44) 01332 875536

WARNING

Mains voltage is present. Care must be exercised when setting potentiometers. It is the responsibility of the user to ensure compliance with the Health and Safety at Work Act 1974.

MOTOR PROTECTION

Fuses in the units are for protection of the controller wiring and components in case of short circuits.
They do not afford motor overload protection.
The installer should provide motor protection as recommended by IEE Regulations.

CONTROLS

1. On/Off Switch: This isolates the motor from the live line. Live remains present on the fuse and neutral remains present on the PCB unless a separate isolator is fitted before the controller.
2. Front Panel Rotary Knob: This enables the user to vary the fan motor speed from a pre-set minimum to maximum speed.
3. Minimum Speed: This internal board mounted control pot provides minimum speed adjustment to as low as 10% of the maximum rated motor speed.
4. Maximum Speed: This internal board mounted control provides maximum speed adjustment. This control is provided to reduce any dead band the motor may have.

WIRING THE CONTROL

Make the connections to the control as follows:
Terminal No:

1. Supply Earth
2. Supply Live (L)
3. Supply Neutral (N)
4. Motor Neutral (NI)
5. Do not use
6. Motor Control Live (L1)

TELEPHONE: SERVICE (44) 01332 875665
FAX: SERVICE (44) 01332 875536

INSTALLATION INSTRUCTIONS

1. Install the control in a well ventilated area where the ambient temperature does not exceed 40°C.
2. Ensure the control is securely mounted.
3. Route cables through knock outs at the bottom of the unit and ensure electrical connections are correct.
4. Switch on the mains supply. Switch on the speed controller.
5. Hardstart - The control applies full power to the load for a few seconds before dropping back to minimum.
6. Rotate speed control knob fully clockwise and check that the fan accelerates to full speed.
7. Minimum Speed - The minimum speed is preset and does not normally need adjusting. If this is necessary firstly ensure the control knob is set to minimum (fully anti-clockwise) then remove the front panel to access the potentiometer (MIN). Adjust as required. Beware of setting too low a value which would cause a stall condition on the fans.
8. Maximum Speed - The maximum speed is preset to full speed. If it is necessary to adjust then first ensure the control knob is set to maximum, and remove the front panel to access the potentiometer. Adjust as required.

TELEPHONE: SERVICE (44) 01332 875665
FAX: SERVICE (44) 01332 875536

Canopy Lights
Types of available lighting

Lighting solutions can be sold to fit in the Parry ranges of canopies.

Inset or Surface Mount Light Boxes

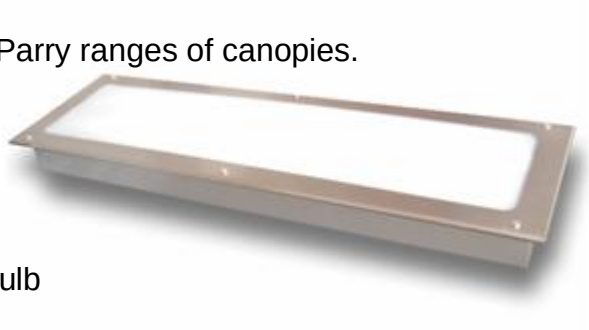

- Stainless steel construction
- Obscured toughened glass
- One 13amp plug
- Removable cover to change light bulb

External Dimensions

SLB700, 720mm length x 165mm wide x 75mm deep
SLB1000, 1020mm length x 165mm wide x 75mm deep
SLB1300, 1320mm length x 165mm wide x 75mm deep
DLB700, 720mm length x 290mm wide x 75mm deep
DLB1000, 1020mm length x 290mm wide x 75mm deep
DLB1300, 1320mm length x 290mm wide x 75mm deep

Power Rating
SLB700 = 1 x 18W
SLB1000 = 1 x 30W
SLB1300 = 1 x 36W
DLB700 = 2 x 18W
DLB1000 = 2 x 30W
DLB1300 = 2 x 36W

Please specify at time of order whether you require an inset or surface mount light box

Bulk Head Light

- High quality die cast bulkhead
- Suitable for vandal resistant or industrial applications
- Glass or polycarbonate diffuser
- 20mm cable entry knock out
- Die cast aluminium body
- BC lampholder for GLS versions or G23 for PL-S versions
- IP 65

TELEPHONE: SERVICE (44) 01332 875665
FAX: SERVICE (44) 01332 875536

Canopy Light Fitting Instructions

Inset Light Box

If units were to be fitted into a ceiling or cupboard etc then the following size holes would need to be cut to allow the unit to recess.

SLB700 = 685 x 130
SLB1000 = 985 x 130
SLB1300 = 1295 x 130
DLB700 = 685 x 255
DLB1000 = 985 x 255
DLB1300 = 1295 x 255

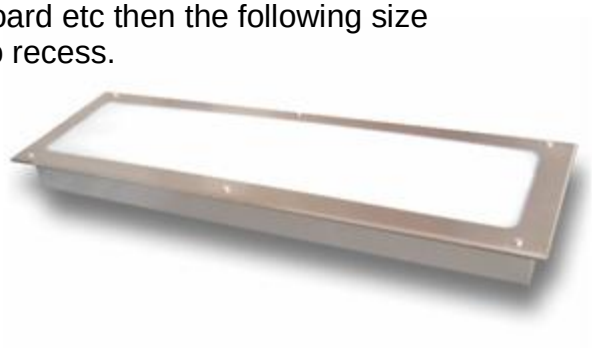

Surface Mount Light Box

There are fixing holes on the light box body that can be easily marked through and drilled to fasten to the underside of the top of the canopy.

Bulk Head Light Box

Fixing holes can be drilled through the aluminium body allowing the light to be attached in the required position on the underside of the top of the canopy.
To fix place the body on a firm surface and remove rear knockouts from inside the body using a suitable punch, striking sharply on the knockout near the periphery but away from the securing tags.

Note: to maintain IP rating and weather proofing, fitting a suitable gasket (rubber) should be used when mounting on a BESA Conduit box – fitted by M4 screws through holes provided on rear of fitting.

TELEPHONE: SERVICE (44) 01332 875665
FAX: SERVICE (44) 01332 875536

Gas Interlock

The gas interlock is a safety system that links the ventilation system and the gas solenoid valve. The gas solenoid valve will remain shut and stop gas flowing to gas appliances if the ventilation fans are not operating, or if the air flow is below a minimum level. The solenoid valve will also shut if the system senses a gas leak anywhere along the pipe work or gas appliance. The system checks this by monitoring the pressure in the pipe work over a 60second period. Low pressure indicates a leak and the interlock system cuts the gas supply.

Parry are now offering canopies sold complete with gas interlock systems. For use with canopies with internal centrifugal fans.

The diagram below shows the items that are included as part of the Gas interlock system.

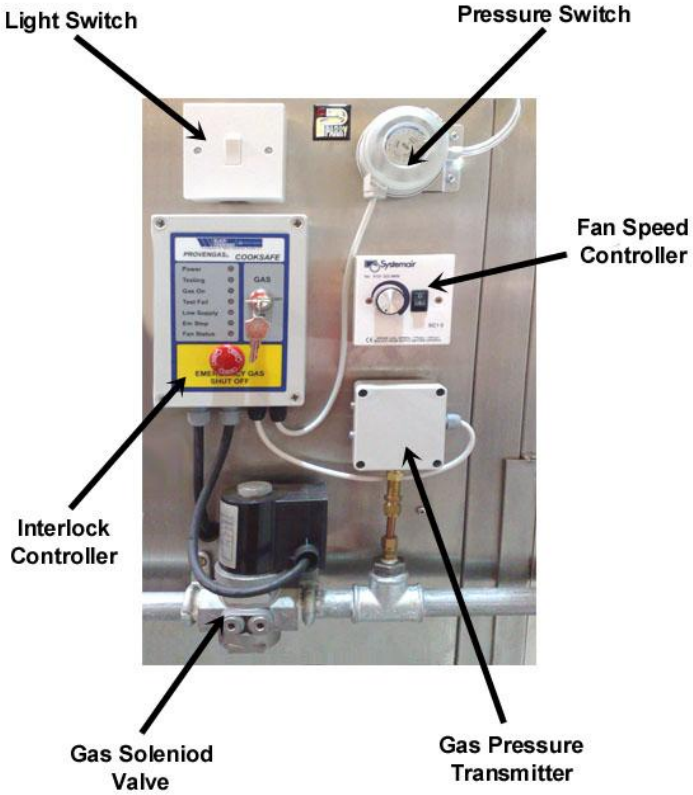

TELEPHONE: SERVICE (44) 01332 875665
FAX: SERVICE (44) 01332 875536

Interlock Controller

COOKSAFE PGCS003
Gas and Fan Proving System

The Cooksafe PGCS003 is a gas pressure and fan proving system for use in commercial kitchens featuring:

• CE Approved Control Panel, Pressure Transmitter and Fan Pressure Switch.
• Constant monitoring for low gas pressure.
• Isolation of the gas if the ventilation fan fails
• Simple installation and commissioning; no complex volume or orifice plate calculations required.
• Removable key switch for security and Emergency Cut-Off switch as standard.
• Assists with kitchen approval to BS61 73:2009
• Low power consumption.
• Can be used on Natural and LP Gas
• LED status indications.
• Must be used with an ENI6I Approved solenoid or Electro-Hydraulic safety shut off valve.
• Connections to gas supply safety shut-off valve.

TELEPHONE: SERVICE (44) 01332 875665
FAX: SERVICE (44) 01332 875536

SPECIFICATIONS

Inputs
230VAC 50Hz
3 Amps max

Outputs
230VAC to gas valve
5 Amp rating

LED Indicators
Power on – Green
Testing – Yellow
Gas on – Red
Test fail – Yellow
Low gas supply – Yellow
Emergency Stop – Yellow
Fan Status – Yellow

Dimensions

128mm Width x 179mm Height x 59mm Depth

Contents

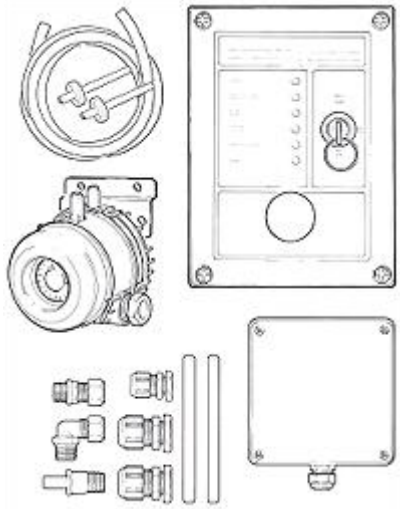	1 x Provengas Cooksafe control panel 1 x pressure transmitter 1 x air pressure switch (See page 39 for full details) 1 x duct APS connector kit 2 x copper pipe (8 mm x approx. 10 cm long) 1 x brass tail (R 1⁄4 tail to 8 mm tube) 1 x 90° fitting (R 1⁄4 male elbow x 8 mm nut/olive) 1 x straight fitting (R 1⁄4 male x 8 mm nut/olive) 2 x large cable glands (M16) 1 x small cable glands (PG7)

TELEPHONE: SERVICE (44) 01332 875665
FAX: SERVICE (44) 01332 875536

Connections

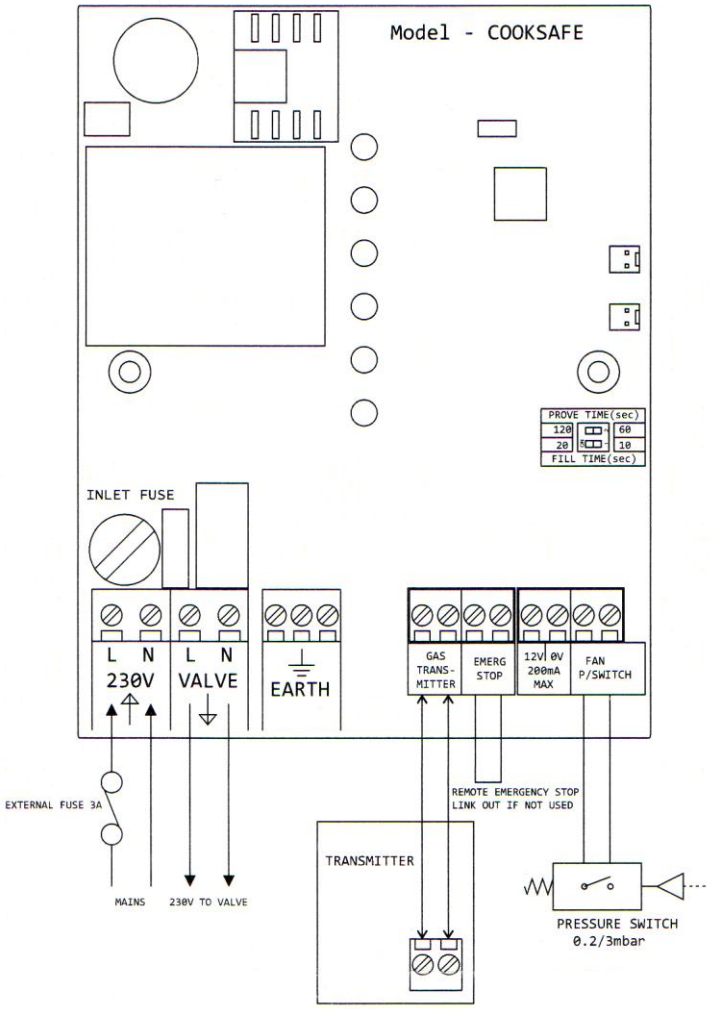

Mounting

Fit the Control valve and using the fittings provided pipe in the Gas Pressure transmitter to the Control Valve output (use the Control valve Test point tapping if available).
There are no pre drilled holes in the Cooksafe enclosure for the input/output cable glands as these must be drilled in the appropriate position for the installation.
Prior to drilling the PCB must be removed. Once the holes have been drilled they must be carefully deburred and all plastic shavings removed from the enclosure. Replace the PCB using the two screws. Do not over tighten these screws.

TELEPHONE: SERVICE (44) 01332 875665
FAX: SERVICE (44) 01332 875536

Settings

Fill time-Set using Switch 1 to 10 or 20 sec (factory default 10 sec)
Prove time-Set using Switch 2 to 60 or 120 sec (factory default 60 sec)
If the remote Emergency Stop is not required a wire link should be inserted to connect the two Emergency Stop terminals on the PCB.

Operation

- Switch on the power and check that the green Power indicator is illuminated.
- Switch on the ventilation fan and check that the yellow Fan Operating indicator is lit.
- Insert the key into the key switch and turn to the ON position.
- The yellow Testing indicator will be lit continuously for the Fill time as set above and then flash at 1 sec intervals for the duration of the Prove time. If at the end of this time the pressure in the outlet pipe work is sufficient then the red Gas on indicator will be lit and the gas will be supplied normally.
- If at any time during the Proving cycle the pressure in the outlet pipework should drop to less than 80% of the inlet gas pressure the yellow Test fail indicator will be lit.
- If the ventilation fails the Fan Operating indicator will flash for 10 sec and if ventilation is not resumed in this time the gas supply will be isolated.
- In this event the key switch should be turned to the OFF position and a check should be made that all gas taps are closed and that the ventilation system is running. Once this is rectified testing can be restarted by turning the key switch to the ON position.

Safety

Installation must be by a qualified electrician and must meet all local regulations.
The mains supply should be externally fused at 3 amps.

TELEPHONE: SERVICE (44) 01332 875665
FAX: SERVICE (44) 01332 875536

Pressure Switch

Operating and Fitting Instructions

Differential pressure, vacuum and overpressure switch

Caution

Before you take the pressure switch into operation, make sure to read these operating instructions thoroughly. In the event of damages due to the non-observance of these instructions, improper operation or use of the switch for purposes for which it is not intended, the warranty becomes null and void. We shall not be held liable for resultant consequential damages. The switch is to be installed and removed by technicians only.

The applicable certified national safety regulations for the operation of pressure measuring devices shall be observed. In the installed condition the respective device-specific requirements on the type of protection must be fulfilled.

– Do not change adjustment of factory-adjusted and paint-sealed switches (screw B and C).

TELEPHONE: SERVICE (44) 01332 875665
FAX: SERVICE (44) 01332 875536

– Screw C was adjusted in the factory, and the adjustment fixed with adhesive. This adjustment may not be changed. Change the switching point with B screw only.

– Adjust upper and lower switching points with the dial (B).

– In case of vacuum: connect P2 Adjustments as indicated in the instructions, except pressure = vacuum.

– Fasten bracket to switch with original factory-supplied screws only.

TELEPHONE: SERVICE (44) 01332 875665
FAX: SERVICE (44) 01332 875536

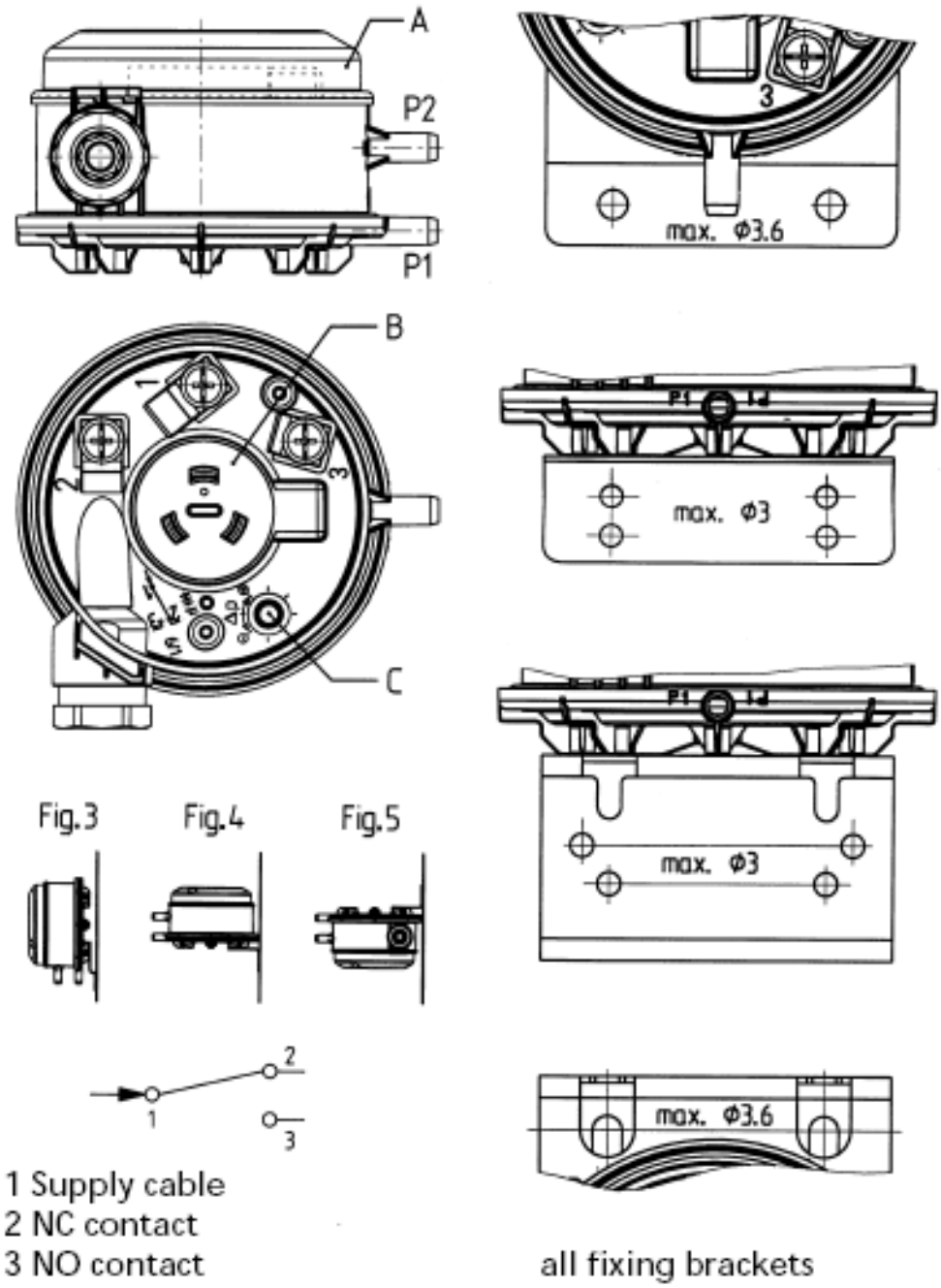

Fig. 3 Recommended installation arrangement vertical (factory calibration).

TELEPHONE: SERVICE (44) 01332 875665
FAX: SERVICE (44) 01332 875536

Fig.4 Horizontal installation arrangement, electrical connections upward. Actual switching points are 11 Pa higher than the scale.

Fig. 5 Horizontal installation arrangement, electrical connections downward. Actual switching points are 11 Pa lower than the scale.

Note
With the safety cover removed, contact with terminals 1, 2 and 3 poses a lethal C hazard (mains power voltage)! Adjusting of upper/lower switching point
(Dial B: For higher switching point [higher pressure] turn in clockwise direction.)
Allow pressure to increase gradually (do not exceed max. pressure limit), adjust desired switching point with dial (B).
Check the upper or lower switching points by raising and lowering the pressure several times and make any necessary adjustments.

Note!
Adjust switch within printed-on scale only!
Do not turn the dial (B) **into the area of the black mark**
! [Switching contact changes from NC
(1-2) to NO (1-2).1

TELEPHONE: SERVICE (44) 01332 875665
FAX: SERVICE (44) 01332 875536

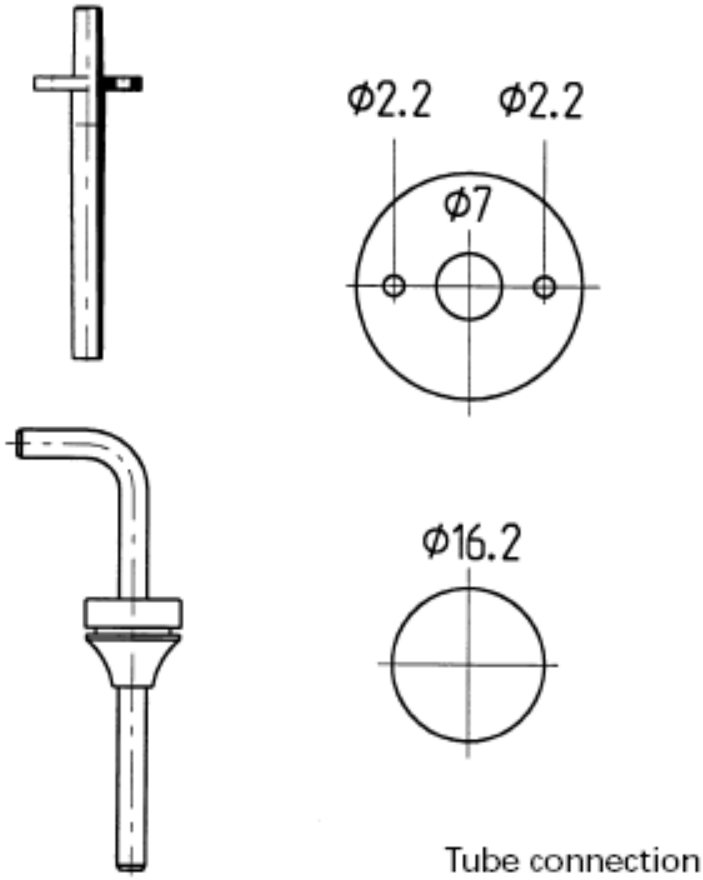

TELEPHONE: SERVICE (44) 01332 875665
FAX: SERVICE (44) 01332 875536

Gas Solenoid Valve and Pressure Transducer

The pressure transducer monitors the gas pressure in the pipe work. If the pressure is found to be low the system highlights that there could be a gas leak and the electrical power supply is disconnected from the gas solenoid valve, causing it to close and cut off the gas supply.

To reactivate the system a manual reset is required on the Interlock controller. This will instigate a further pressure check, and if all is found to be satisfactory, restore electrical power to the gas solenoid, which will open the valve.

TELEPHONE: SERVICE (44) 01332 875665
FAX: SERVICE (44) 01332 875536

EFSC RANGE FAN SPEED CONTROLLERS

General

A range of Electronic Fan Speed Controllers (EFSC) designed for speed controllable single phase motors up to 10 amps peak current. The facia is white with black knob, switch and printing. All models have a double pole illuminated on/off rocker switch.

A facility to set the minimum and maximum fan speed is standard.

- 2 or 3 wire control as standard
- Electronic stepless speed control
- Minimum and maximum speed set facility (internal)
- EFSC 1.5 complete with standard moulded double pattress box
- EFSC 3 and 5 complete with double gang mini trucking box
- EFSC 10 housed in die cast enclosure
- Complies with low voltage directive 72/23/CEE
- Complies with EMC directives 89/336CEE and MODS
- All models fitted with motor protection fuse
- Spare fuse included with each controller

TELEPHONE: SERVICE (44) 01332 875665
FAX: SERVICE (44) 01332 875536

- Surface mounting as standard (see below)
- EFSC 1.5, 3 and 5 can be installed flush using a 47mm metal backing box (not supplied)
- Higher current ratings available to special order

TYPE	Max. Full. Load Current (amps)	Dimensions HxWxD* (mm)	Weight (Kg)	Enclosure	IP rating Electrical Supply
EFSC 1.5	1.50	87 x 147 x 55	0.35	IP51	240V AC 1Ph 50Hz
EFSC 3	3.00	87 x 147 x 46	0.35	IP51	240V AC 1Ph 50Hz
EFSC 5	5.00	87 x 147 x 46	0.40	IP51	240V AC 1Ph 50Hz
EFSC 6	6.00	95 x 145 x 50	0.55	IP51	240V AC 1Ph 50Hz
EFSC 10	10.00	192 x 110 x 60	0.80	IP51	240V AC 1Ph 50Hz
3SS	15.00	87 x 147 x 11**	0.55	IP44	240v AC 1Ph 50Hz

* + 47mm metal backing box ** +15mm for knob (3SS = 35mm) for flush mounting

Wiring Diagram

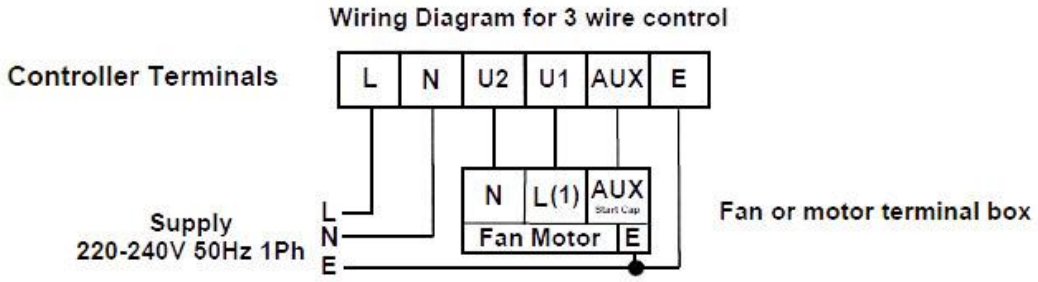

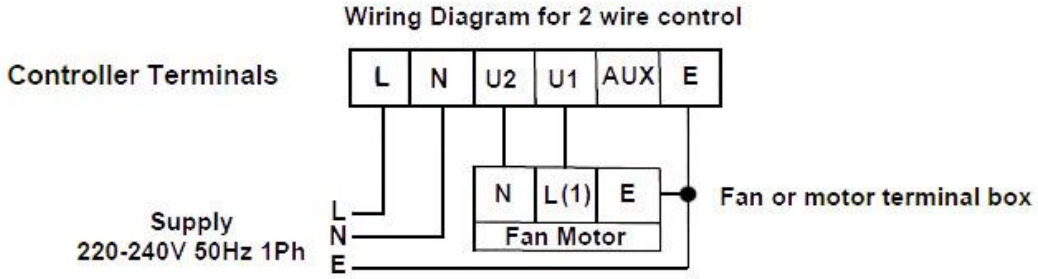

TELEPHONE: SERVICE (44) 01332 875665
FAX: SERVICE (44) 01332 875536

Warranty Information

WARRANTY POLICY

• The manufacturers warranty is only valid in the UK mainland & Northern Ireland,
Western Isles, Inner Hebrides and Islands are parts only warranty.
• All service calls will be carried out between the hours of 8.00am – 5.00pm Monday to Friday only.
•We accept no responsibility for delays in replacing or repairing the equipment due to
circumstances beyond our control.
• Your warranty can be immediately invalid if the installation of the equipment has not
been installed in accordance with the manufactures instruction. (See installation details).
Also the miss-use, alteration or unauthorised repairs of the equipment will invalidate
the warranty.
• During the warranty period it is at Parrys discretion to repair or replace the equipment.
•Warranty only applies if the equipment has been used in a professional manor following
the manufactures instructions and maintenance guide lines.
• The warranty covers defects in the material and components failure only. We are
not liable for trading loss, loss of perishable items, water damage, loss due to injury
or fire damage.

WARRANTY REQUEST

• Please ensure you have referred to the manufacturers' instruction before placing a
warranty call. Or contact our warranty department on 01332 875665 for technical assistance. Please ensure you obtain the model number before calling.
• Please ensure you have read the section not covered under warranty to avoid any
unnecessary warranty charges.
• If the problem with the machine can not be resolved please contact the company that

TELEPHONE: SERVICE (44) 01332 875665
FAX: SERVICE (44) 01332 875536

supplied you the machine.
(**SERVICE CALLS CAN NOT BE PLACED DIRECT WITH PARRY**)

NOT COVERED UNDER WARRANTY

• Fault due to poor maintenance.
• Resetting of equipment or circuit breakers.
• Abuse of the equipment
• Foil should never be used on racks
• Blockages eg, drains, condensers, pumps etc
• Lime scale related issues
• Installed incorrect
• Access arranged for service call and engineer refused access or customer not there.
• No faults with the machine.
• Setting up of equipment eg, dishwasher detergents, levelling and setting up of doors on
a 6 burner cooker.
• Excessive carbon build up on griddle plates.
• Over use of lava rock on the chargrills recommended use by Parry 2kg only.
• Faulty electrics – eg, customers plug socket, plug, wiring, junction box fault, wrong fuse.
• Any damages caused by the customer.
• Lamps, glass, door gaskets, Perspex, baskets, knobs all perishable items are not covered.

All of the above are not covered under our warranty policy. Any costs incurred because of the above will be forwarded to the parties responsible for placing the call.

Failure to pay any warranty charges will result in the customers warranty been put on hold until the bill has been settled.

Any issues regarding the raised charges should be put in writing to our warranty department for further investigation.

TELEPHONE: SERVICE (44) 01332 875665
FAX: SERVICE (44) 01332 875536

Disposal Information

This appliance is marked according to the **European directive 2002/96/EC** on **Waste Electrical and Electronic Equipment (WEEE)**.
By ensuring this product is disposed of correctly, you will help prevent potential negative consequences for the environment and human health, which could otherwise be caused by inappropriate waste handling of this product.

A symbol on the product, or on the documents accompanying the product, indicates that this appliance may not be treated as household waste. Instead it shall be handed over to the applicable collection point for the recycling of electrical and electronic equipment.

Disposal must be carried out in accordance with local environmental regulations for waste disposal.

For more detailed information about treatment, recovery and recycling of this product, please contact your local city office, your household waste disposal service or the shop where you purchased the product.

TELEPHONE: SERVICE (44) 01332 875665
FAX: SERVICE (44) 01332 875536

Parry Catering recognises our obligations to the **EU DIRECTIVE** covering the waste disposal of electrical and electronic equipment **(WEEE)**, Parry Catering are committed to this policy in order to help conserve the environment.

At the end of this unit's life you **MUST** dispose of it in an approved manner. You **MUST** not discard the unit or place it in the refuse bin.

You have several options:

a) Take the unit to an approved WEEE scheme company, there will be one in your area.

b) Take the unit to an approved waste disposal site; many sites are managed by your local authority.

Contact the Parry Group Ltd on the Sales number 01332 875544 for further information on disposal.

There will probably be a charge for this service which will depend on the physical location of the unit and size you will be given a collection price for a curb side collection based on commercial rates prevailing at the time.

It should be noted that the unit to be collected should be suitably packed and sealed to prevent dangerous gases and fluids from escaping. The condition of the unit must also be clean to comply with health and safety regulations.