SJ Stephens Associates

ARBORICULTURAL, LANDSCAPE & MANAGEMENT CONSULTANTS

Savernake Barn
Stokke Common
Great Bedwyn
Marlborough
Wiltshire SN8 3LL
Tel: 01672 871 862
www.sjstephens.co.uk
e: info@sjstephens.co.uk

Arboricultural Impact Assessment

- Tree Survey
- Tree Protection Plan
- Arboricultural Method Statement

At:-

Carlisle House
118 Oxford Road
Reading
RG1 7NG

On behalf of:-

Turner Property Ltd
The Office
19-28 Hillside House
Allcroft Road
Reading
RG1 5DJ

Prepared by:

Catherine Fforde, HND Hort,
Dip Arb L4(ABC), MCIHort, MArborA
Email: catherine@sjstephens.co.uk

Approved by:

Simon Stephens MA Oxon, Dip Arb(RFS), MArborA, C Env. MICFor
Email: simon@sjstephens.co.uk

Survey Date: 17th November 2020
Report Date: 21st March 2022
Project no: 1621

CONTENTS

1 BACKGROUND
2 SURVEY DETAILS AND SCOPE
3 SURVEY LIMITATIONS
4 LEGAL PROTECTION OF TREES
5 ARBORICULTURAL METHOD STATEMENT
6 ARBORICULTURAL IMPACT ASSESSMENT
7 REFERENCES

Appendices
A Tree Protection Plan: drawing no: 1621-02 Rev A
B Tree Schedule
C BS 5837:2012 - Trees in relation to design, demolition and construction, Table 1
D Tree Protection Fencing Detail
E Site photos
F Proposed Site Plan

1 BACKGROUND

1.1 This Arboricultural Impact Assessment has been instructed by Turner Property Ltd to provide tree protection measures and to assess the arboricultural impact of the proposed change of use from 4no. dwelling flats to become 6no. dwelling flats, along with associated landscaping and construction of plant room and cycle store.

1.2 Trees were surveyed, with findings shown in the Tree Schedule in Appendix B and plotted on the Tree Protection Plan in Appendix A. This also shows tree protection measures, which are specified in the Arboricultural Method Statement in section 5 below. The arboricultural impact is assessed in section 6, which assumes that these measures are followed.

1.3 The tree survey was undertaken, and this report has been prepared, by Catherine Fforde HND Hort, Dip Arb L4(ABC), MCIHort, MArborA and approved by Simon Stephens MA Oxon, Dip Arb (RFS), MArborA, C Env, MICFor a Registered Consultant with the Arboricultural Association, with over 20 years relevant experience.

1.4 This survey and report have been prepared in accordance with the recommendations of BS 5837:2012, Trees in relation to design, demolition and construction - Recommendations.

1.5 Documentation supplied:

- Topographical Survey
- SJ Stephens Associates, Tree Constraints Plan, dated November 2020
- Weston & Co Architects, Proposed Site Plan: drawing no: 18009-PL-03

2 SURVEY DETAILS AND SCOPE

2.1 The site survey included trees and shrubs, within influencing distance of the proposed development, with a stem diameter over 75mm at 1.5m height, as shown located on the Tree Protection Plan, included as Appendix A.

2.2 Tree inspection took place from ground level with the use of binoculars, sounding hammer and metal probe using the Visual Tree Assessment method (Mattheck & Breloer 1994). The presence and condition of bark and stem wounds, cavities, decay, fungal fruiting bodies and any structural defects that could increase the risk of structural failure were noted.

2.3 Tree diameters were measured using a girthing tape and tree heights were measured using a hypsometer. Where use of a tape was restricted by site factors, diameters were estimated, with the diameter recorded in the tree schedule preceded by the word “est”.

2.4 At the time of the survey, the weather was overcast, but with no restrictions to visibility. Broadleaf trees were not in leaf. In places, site features restricted access for inspection of trees.

2.5 The suitability of trees for inclusion in the future development was considered, in particular considering the safe useful life expectancy, and sustainability, of trees on the site after development is completed.

2.6 Tree details are shown on the Tree Protection Plan included as Appendix A. Tree locations have been taken from the topographical survey provided. Where not included on the topographical survey, they have been determined by measuring distances from features shown on the plan, using a laser measuring device. The following information was recorded for each tree, and is shown in the Tree Schedule included as Appendix B:

- **Number:** an identity number for each tree, prefixed with a “T”, which cross references locations shown on the plan with the schedule in Appendix B. Where a number of trees are located close together and are similar in character and management requirements, they have been treated as a Group under a single number, prefixed with a “G”.
- **Species**: common name.
- **Tree height**: approximate height in metres.
- **Stem diameter**: diameter in millimetres, taken at 1.5m above ground. Where there are a number of stems, stem diameters are recorded in the condition column.

- **Branch spread**: approximate spread in metres to N,S,E and W of the trunk. The approximate branch spread is drawn on the plan.
- **Canopy clearance**: approximate height of the canopy above ground. Where a significant, low lateral branch is present, its height and direction of growth is included in the Condition column.
- **Age class**: Young, Semi-mature, Early mature, Mature, Over-mature, Veteran.
- **Condition**: features that affect the safe useful life expectancy and amenity of the tree, including the presence of decay or any physical defect.
- **Management Recommendations**: recommendations to ensure the health and safety of the tree, within the future development.
- **Estimated Remaining Contribution**: <10 years, 5-15 years, 10-20 years, 15-30 years, 20-40 years, >40 years.
- **Category grading**: tree classification taken from BS 5837:2012, Trees in relation to design, demolition and construction (see Appendix C for details), as follows:
    - Category U: Unsuitable for retention, trees with less than 10 years life expectancy, normally recommended for removal (Red)
    - Category A: high quality trees, able to make a substantial contribution for at least 40 years, normally retained unless there is an over-riding reason for removal and appropriate mitigation. (Green)
    - Category B: moderate quality trees, able to make a significant contribution for at least 20 years, normally retained. (Blue)
    - Category B/C: an intermediate category between categories B and C (not specifically described in BS5837). Trees, which should be retained wherever possible, providing retention does not unreasonably constrain the layout. (Blue)
    - Category C: low quality, in adequate condition to remain for at least 10 years, or young trees <150mm stem diameter. Trees which can be removed to allow the desired layout or new planting. (Grey)

  For category A, B and C trees, a subcategory has been allocated, providing information on the reasons for selection of a specific category, as follows:
    - Subcategory 1: mainly arboricultural values.
    - Subcategory 2: mainly landscape values.
    - Subcategory 3: mainly cultural values, including conservation.
- Trees have been classified irrespective of the possible proximity to future construction. The BS 5837 category is colour coded, as indicated above, on the plan included as Appendix A.
- **Protection Distance:** the protection distance in metres required to provide the Root Protection Area recommended in BS 5837, assuming a circular area centred on the tree.
- **Root Protection Area (RPA):** the area in m^2, as recommended in BS 5837, to provide sufficient rooting area to ensure tree survival and which, in most situations, should be fenced off to prevent root damage from construction activities.

3 SURVEY LIMITATIONS

3.1 No internal decay devices, or other invasive tools to assess tree condition, were used.

3.2 No soil excavation or root inspection was carried out.

3.3 This survey has not considered the effect that trees or vegetation may have on the structural integrity of future building through subsidence or heave.

3.4 The tree survey has been undertaken for planning purposes. Although any obvious structural defects have been noted, a Tree Hazard Assessment has not been carried out. Mature trees close to highly populated areas or public highways should normally be checked for safety annually, by a suitably qualified person.

4 LEGAL PROTECTION OF TREES

4.1 The Reading Borough Council My Reading web page was viewed on 20-09-2021, which showed that the site is within a Conservation Area. The Reading Borough Council Tree Preservation Order Directory does not show any Tree Preservation Orders for the site but does include one for the adjacent site of Holy Trinity Church. The presence of Planning Conditions currently attached to the site, was not checked.

4.2 Since the site is covered by a Conservation Area, six weeks notification must be given to the local planning authority of any intended tree surgery works, to allow them the option of placing a Tree Preservation Order.

4.3 Once planning permission has been granted, provided the application clearly shows any trees to be removed or pruned, this overrides protection provided by Tree Preservation Orders or Conservation Areas, provided the work is necessary to implement the approved development. If not essential, a separate tree work application will need to be submitted for trees protected by a Tree Preservation Order.

5 ARBORICULTURAL METHOD STATEMENT

5.1 Site Overview

5.1.1 The proposal is for the conversion of 4no. dwelling flats to become 6no. dwelling flats, along with associated landscaping and construction of plant room and cycle store. The proposed site plan is included as Appendix F and has been added to the survey drawing, along with tree details, to create the Tree Protection Plan attached as Appendix A.

5.1.2 The site has a Grade 2 listed house which contains four flats. The house is set in the northeast corner of the site. A gravel parking area is located to the west side of the house, with a vehicular access from Trinity Place. A pedestrian footpath extends from the front door of the house to a pedestrian gate at the southern end of the site, passing between Holy Trinity Church to the east and Odd Fellows Hall to the west.

5.1.3 An area of grass is located to the south of the parking area. Within the grass is a mature Mulberry, T2. A photo is included in Appendix E. The garden area has suffered from a lack of recent management and is generally untidy.

5.1.4 A line of pollarded lime trees (G1) is growing to the inside of the western boundary wall, adjacent to Trinity Place. The trees bases were obscured by basal growth, piles of stone and discarded household items. A single pollarded lime (T3) is located close to the southern boundary wall, north of Odd Fellows Hall. T3 is in decline. It is likely that further trees, now lost, once connected to the limes adjacent to Trinity Place.

5.1.5 Sycamore trees are growing along the east side of the footpath, and to the front of the house, close to the stone retaining wall on the boundary with Holy Trinity Church. In one area, adjacent to G14, the wall has partially collapsed due to root pressure from trees. There appear to be some signs of movement in other sections of the wall however the wall was not closely inspected. An inspection for structural defects should be carried out by an appropriately qualified building surveyor.

5.2 Tree Work

5.2.1 Details of proposed tree works are included in the Tree Schedule included as Appendix B.

5.2.2 Fourteen trees and five groups are proposed for removal, as detailed in section 6.1 below.

5.2.3 All tree work must be undertaken to the standards set out in BS 3998:2010 Tree work – Recommendations.

5.3 Root Protection Areas

5.3.1 Root Protection Areas are shown for all trees in the Tree Schedule included as Appendix B. They are also shown for all retained trees, as circular areas centred on the trunk, on the Tree Protection Plan included as Appendix A. Where there are physical obstructions to root growth the Root Protection Area should be shown as an equivalent area that is more likely to reflect actual root growth. The Root Protection Area shows the area around a tree in which all construction activity must normally be excluded, unless appropriate protection measures are implemented.

5.4 Tree Protection Fencing

5.4.1 Tree Protection Fencing must be erected where shown on the Tree Protection Plan, included as Appendix A. This will provide full protection of the Root Protection Areas of all retained trees within the site, other than for:

- area hatched in blue on the Tree Protection Plan, where No-Dig Construction must be used, as described in section 5.5 below, to protect underlying roots.
- areas shaded and hatched cyan on the Tree Protection Plan, indicating Ground Protection Areas, where roots must be protected, as described in section 5.6 below.

5.4.2 Tree works can be completed before Tree Protection Fencing is erected, however no contractors plant or vehicles must be allowed to track within the Root Protection Areas unless ground protection panels are laid.

5.4.3 Tree Protection Fencing must be from weldmesh panels, at least 2m high, securely fixed, with wire or scaffold clamps, to a rigid framework. This framework must be constructed from scaffold tubes with vertical tubes, at a maximum interval of 3m and driven into the ground at least 0.6m. The structure must be well braced to resist impacts, constructed as per Figure 2 of BS5837:2012, which is reproduced in Appendix D. Alternatively, weldmesh panels can be supported on blocks, providing the blocks are pinned to the ground with road pins, or similar, and the panels are braced, as per Figure 3 of BS5837:2012, which is also reproduced in Appendix D.

5.4.4 Tree Protection Fencing must initially be erected to prevent access to the No-Dig area, where indicated “G” on the drawing while ground work is undertaken, then moved to where indicated “C”, and ground protection laid, before construction work on the No-Dig area starts.

5.4.5 After erection of Tree Protection Fencing and installation of ground protection, two days’ notice must be given to the local planning authority before construction, including any ground work, starts on site.

5.4.6 Tree Protection Fencing must be maintained and retained for the duration of the works, or until such time as agreed in writing with the local planning authority.

5.4.7 Weatherproof notices must be fixed to the Tree Protection Fencing, and maintained, stating:-

TREE PROTECTION AREA
KEEP OUT
TREES ENCLOSED BY THIS FENCE ARE PROTECTED BY PLANNING CONDITIONS AND CONSERVATION AREA STATUS
CONTRAVENTION MAY LEAD TO CRIMINAL PROSECUTION
THE FOLLOWING MUST BE OBSERVED BY ALL PERSONS:

- The Protection Fence must not be moved
- No person or machine must enter the area
- No materials or spoil must be deposited
- No excavation must be permitted

ANY INCURSION INTO THE PROTECTED AREA MUST BE WITH THE WRITTEN PERMISSION OF THE LOCAL PLANNING AUTHORITY

5.5 No-Dig Construction Areas

5.5.1 The No-Dig Construction areas, are shown hatched blue on the Tree Protection Plan included as Appendix A. These cover areas within Root Protection Areas where:-

- new hard surfacing is to be constructed on an existing soft area
- a new cycle store is to be constructed

5.5.2 Where existing soft areas within No-Dig Construction areas are to be replaced by new hard surfacing, they must be constructed without excavation apart from the removal of turf/organic matter, which must be carried out by hand. Engineering details must avoid localised compaction, using both a two dimensional geogrid, and a three dimensional cellular confinement system as integral components of the sub-base. A typical section is shown on the Tree Protection Plan included as Appendix A. As well as being fit for purpose, the design and methodology must protect tree roots, by ensuring the following:-

- topsoil/turf can be removed carefully by hand to a maximum of 50mm, but less if roots are found nearer the surface.
- following leveling with soil or sand, a permeable, non-woven geotextile membrane, must be laid.
- a suitable two dimensional geogrid, such the TriAx Geogrid supplied by Tensar International (www.tensar.co.uk), or the Biaxial Geogrid supplied by Geosynthetics Ltd (www.geosyn.co.uk), must be laid over the entire area and underneath the edging.
- pressure treated timber edging boards, supported by driven stakes must be used.
- a suitable cellular confinement system must then be laid to manufacturers instructions on top of the geogrid. Products that might be considered include Geoweb, supplied by Greenfix (www.greenfix.co.uk) or Cellweb, supplied by Geosynthetics Ltd (www.geosyn.co.uk). The depth of the system must be adequate to take the maximum axle weight, as per manufacturers guidance.

- the cellular confinement system must be filled with clean (no fines), washed angular, 4/20mm, stone to provide load support, while allowing air and moisture to permeate to the root zone.
- a further permeable, non-woven geotextile membrane, such as TreetexT300, or an alternative approved product which has similar oil trapping qualities, must be laid over the cellular confinement system.
- a porous, surfacing material, free from contaminants, must then be laid. Either sand bedding and block paving, gravel or permeable tarmac would be suitable.
- removed turf/topsoil can be used to grade surrounding ground levels.

5.5.3 The proposed cycle store, which falls within the Root Protection Areas of G1 and T2, must be built on a concrete slab, constructed on top of existing levels without excavation. Engineering details must include a cellular confinement system filled with clean stone, which will prevent soil compaction and allow gaseous diffusion to and from underlying roots, and may required piles for stability. A typical section is shown on the Tree Protection Plan. As well as being fit for purpose, the design and methodology must protect tree roots, by following the following construction methodology:-

- topsoil/turf can be removed carefully by hand to a maximum of 50mm, but less if roots are found nearer the surface.
- following leveling with soil or sand, a permeable, non-woven geotextile membrane, must be laid.
- pressure treated timber edging boards, supported by driven stakes must be used.
- a suitable cellular confinement system must then be laid to manufacturers instructions. Products that might be considered include Geoweb, supplied by Greenfix (www.greenfix.co.uk) or Cellweb, supplied by Geosynthetics Ltd (www.geosyn.co.uk).
- the cellular confinement system must be filled with clean (no fines), washed angular, 4/20mm, stone to provide load support, while allowing air and moisture to permeate to the root zone. The depth of the cellular confinement system must be confirmed with the suppliers as being adequate to protect the ground during pile driving operations.
- pile locations must be marked and trial holes dug, by hand, to a depth of 750mm. If roots over 25mm diameter are found, the pile positions must be shifted to avoid them.
- each pile position must be sleeved using plastic piping or a polythene coated cardboard tube to prevent concrete from the pile leaching into the root zone. Alternatively screw piles (see eg. www.abcanchors.co.uk) may be used which avoids the need for concrete in the root zone.
- a further non-permeable, geotextile membrane, or heavy-duty polythene must then be laid before the reinforced concrete base is laid, which will be supported by the piles.
- removed turf/topsoil can be used to grade surrounding ground levels.

5.5.4 Site traffic, including pedestrians, must not be allowed on the No-Dig areas until roots are protected by the No-Dig surfacing, or unless suitable ground protection has been laid. If access is required across No-Dig areas for plant, before the No-Dig surfacing is laid, ground protection panels must be laid. Either Trakmats (supplied by the Marwood Group, www.marwoodgroup.co.uk), Groundtrax panels (see www.groundtrax.com), Ground-Guards, as supplied by Greentek (www.greentek.org.uk), or a similar approved product, must be used, laid on top of a compressible layer of sand or woodchips, laid onto a geotextile. If access is required for pedestrians, 25mm plywood or side butting scaffold boards must be laid, on top of a compressible layer of sand or woodchips, laid onto a geotextile.

5.5.5 No-Dig construction will result in an increase in levels. This must be fully taken account of in all other aspects of the design.

5.6 Ground Protection Areas

5.6.1 The Ground Protection Areas, which are shaded cyan on the Tree Protection Plan, contain hard surfacing which is protecting any underlying roots. No excavation must be permitted beneath the base course within these areas.

5.6.2 Adjacent to the new cycle store, where pedestrian movement will take place within the Root Protection Areas of trees, a Ground Protection Area is shown hatched cyan on the plan. The Tree Protection Fencing must be set back from the building line, with the ground between the fencing and the building protected by either 25mm plywood or side butting scaffold boards, on top of a compressible layer of sand or woodchips, laid onto a geotextile. Alternatively, scaffold boards can be fixed on a driven scaffold frame, so as to form a suspended walkway.

5.6.3 Ground protection must be laid before any construction starts on the new cycle store and must be maintained in good condition until all construction operations have been completed. Ground protection must be fit for purpose and be replaced with an alternative product if panels start to move or any sign of ground compaction is seen.

5.6.4 An excavator must only be used for the removal of the existing hard surfacing within the Root Protection Area of T2, if it can work only from areas of hard standing, or from outside the Root Protection Area. A banksman must be present during this operation and excavation must go no deeper than the existing base course and must cease immediately if roots are found. Once hard surfacing has been removed, the area must immediately be topsoiled using good quality topsoil supplied to BS3882:2015. Tree Protection Fencing must then be erected around the Root Protection Area, or Ground Protection installed, and retained in place until all construction operations are completed on site.

5.7 General measures

5.7.1 No construction activity whatsoever, including routing of underground services, storage of materials or on-site parking, must be allowed within Root Protection Areas, other than that specifically described above.

5.7.2 No mixing or storage of cement, concrete, oil, fuel, bitumen or other chemicals must be permitted within 10m of the trunk of any retained trees, nor in any position where the slope of the ground could lead to contamination of the Root Protection Area.

5.7.3 Fires must not be lit in a position where their flames could extend to within 10m of foliage, branches or trunk.

5.7.4 Landscape works carried out within Root Protection Areas must be undertaken with great care so as not to damage shallow roots. Tractor mounted rotovators or other heavy mechanical cultivation must not be used within the Root Protection Areas.

5.7.5 If any tree shown for retention is removed, uprooted or destroyed, another tree must be planted in the same location, at a size and species to be agreed in writing with the Local Planning Authority.

5.7.6 A copy of this report and the Tree Protection Plan must be kept on site and must be fully understood by the Site Agent.

5.8 Bat roosts

5.8.1 The current legislation makes it a criminal offence to disturb, damage or destroy any bat roost or hibernation area. Contractors must be reminded of their responsibilities and should contact the relevant authorities if any signs of bats are found.

5.9 Birds

5.9.1 The current legislation makes it a criminal offence to disturb nesting birds. The nesting season is generally assumed to be from 1st March to 31st July, however this can vary depending on species and location. During these months a careful inspection must be made before work commences and works must be postponed if active nests are found.

5.10 Arboricultural Supervision

5.10.1 A qualified Arboricultural Consultant must be retained during the period of construction to carry out the following:

- to meet with/ liaise with the contractor, prior to construction or ground work starting on site, to ensure this Arboricultural Method Statement is fully understood and can be complied with in full. If any revisions are required, a revised Arboricultural Method Statement must be approved by the local planning authority, prior to construction or ground work starting on site.

- to inspect Tree Protection Fencing and ground protection, prior to construction or ground work starting on site.

- as necessary, to advise on any issues at the request of the local planning authority, the developer, architect or contractor.

The details of each site visit must be recorded using a site visit proforma, with copies circulated to the contractor, developer and the local authority tree officer within three working days of the visit.

6 ARBORICULTURAL IMPACT ASSESSMENT

6.1 The following trees / groups, categorized as per BS 5837 (see Appendix C for details), are proposed for removal:

- Category U – unsuitable for retention: Two trees – T16 and T19, and one group – G14.
- Category C – low quality: Nine trees – T3, T8, T10. T11, T12, T13, T18, T20 and T22, and four groups – G4, G5, G6 and G21.
- Category B/C – between categories B and C: Three trees:
    - T7 – a 12.5m, early mature sycamore.
    - T9 – a 12.5m, early mature sycamore.
    - T15 – a 13m, early mature sycamore.

6.2 Trees proposed for removal are of no particular arboricultural merit. If retained, trees growing adjacent to the retaining wall on the boundary with Holy Trinity Church would be likely to cause structural damage to the wall. Two trees (G14) have already been cut down to stumps where a section of the wall has partially collapsed. The trees are not considered to be sustainable irrespective of the proposed development. The removal of trees will result in a significant loss of greening but will improve the amount of natural daylight reaching the site and the windows of Holy Trinity Church and Odd Fellows Hall. New tree planting is proposed, where indicated on the Site Layout Plan attached as Appendix F, to mitigate removed trees. Given the site constraints it is unlikely that the amount of existing canopy cover can be replaced however selection of species appropriate for the site will result in a more sustainable landscape.

6.3 Although preservation of Root Protection Areas is deemed to protect tree roots, in some cases buildings may need to be set further back to ensure the future sustainability of trees. If buildings are too close to trees, future occupiers may be likely to seek the reduction, or removal of trees, if they are cutting out excessive sunlight or providing a claustrophobic or threatening environment. Section 5.2.2 of BS 5837:2012 states that "an indication of potential direct obstruction of sunlight can be illustrated by plotting a segment with a radius from the centre of the stem equal to the height of the tree, drawn from due North West to due East, indicating the shadow pattern through the main part of the day." Shading patterns for key trees have been shown on the plan. This shows that the flats are outside potential shading areas.

6.4 There will be no large trees close enough to the flats to produce a claustrophobic or threatening environment for future residents. Instead, retained trees will contribute to the amenity of the site and the screening of private amenity space. The proposals will not therefore adversely affect the sustainability of retained trees. Further, the provision of a new landscape scheme for the site will result in an improvement on the existing garden management which will also benefit retained trees.

6.5 Provided the recommendations in this report are followed, the arboricultural impact of this development on existing trees is considered acceptable.

7 REFERENCES

- *BS5837:2012 Trees in relation to design, demolition and construction – Recommendations.*
- *BS3998:2010 Tree Work. Recommendations.*
- *The use of Cellular Confinement systems near Trees: a guide to good practice Arboricultural Association Guidance Note 12.*

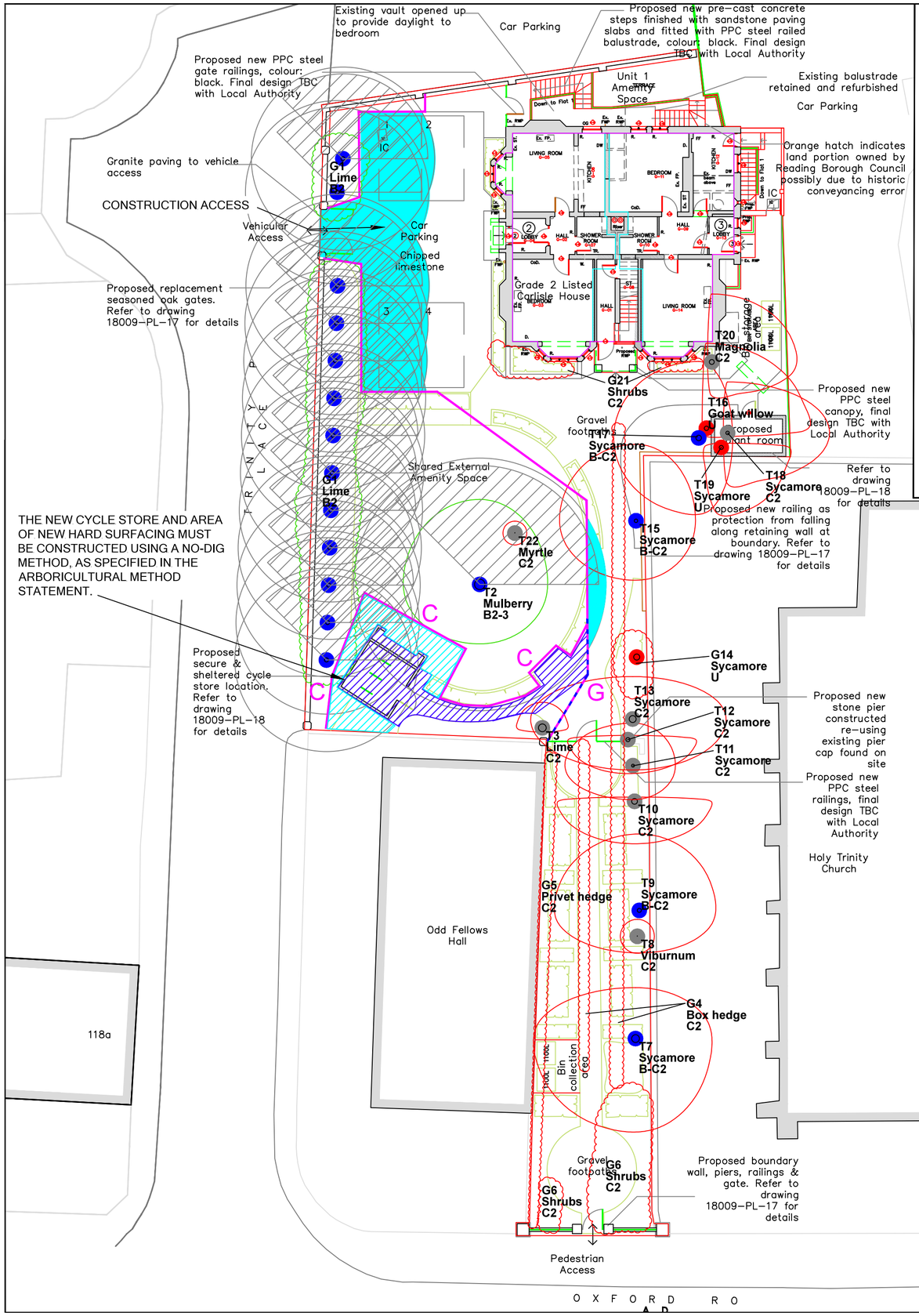

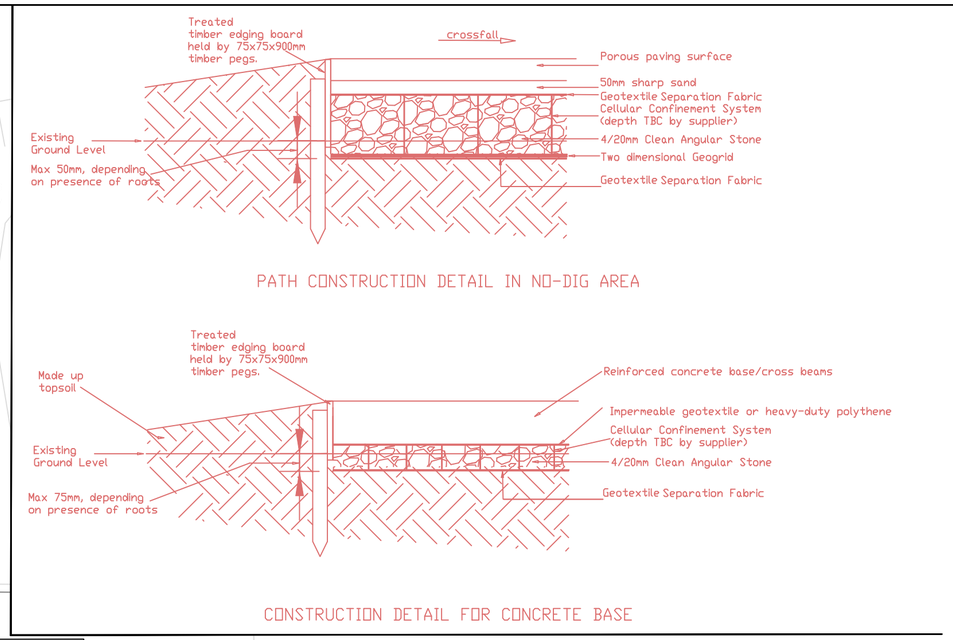

APPENDIX A

Key

- Category U
- Category A
- Category B
- Category C
- Crown spread: retained trees
- Trees For Removal
- Root Protection Area
- Tree Protection Fence
- G location: ground work
- C location: construction
- No-Dig Construction
- Ground Protection Area: existing hard surface
- Ground Protection Area: existing soft surface
- BS 5837 Shade Area

N
W E
S

Scale
0 5m 10m

SJ Stephens Associates
Savernake Barn, Stokke Common
Great Bedwyn
Marlborough
Wiltshire SN8 3LL
01672 871862
www.sjstephens.co.uk

JOB TITLE	CARLISLE HOUSE
DRAWING TITLE	TREE PROTECTION PLAN
DRAWING NUMBER	1621-02
REV	A
REVISIONS	
SCALE	1:200 at A2
DATE	MAR 22
DRAWN BY	cf

Tree/ Group No.	Species	Height (m)	Stem Diam. at 1.5m (mm)	Branch Spread (m)				Canopy Cleara -nce (m)	Age Class	Observations	Management Recommendations	Estimated Remaining Contribution (years)	BS 5837 Category Grading	Protect -ion Distnce (m)	Root Protect. Area (m2)
				N	S	E	W								
G1	Lime	3.5 - 4	250 - 450					2	Mature	Line of trees. Previously pollarded but lapsed and large stems removed back to pollard points. Extensive basal growth and side shoots. Stone boulders and scrap metal around and between stems. Occasional cavities and pockets of decay. Inspection limited by restricted visibility and access.	Remove basal shoots and stem shoots. Clear scrap metal and loose masonry. Re-inspect before new site occupancy. Re-pollard every three years.	15-30	B2	5.4	92
T2	Mulberry	7	@ 1.3m 620	5	3.5	4	4.5	2	Mature	Heavily burred stem. Major stem fork at 1.8m. Tear out wounds and areas of decay. Major laterals reduced. Good vitality. High conversation value.	Remove elder growing within stem fork.	15-30	B2-3	7.4	174
T3	Lime	3.5	est 470	1.5	0	1.5	1.5	3.0	Mature	Previously pollarded and heavily reduced. Basal growth and stem shoots. Ivy over stem. Base not inspected. Low vigour in fresh growth.	Remove to allow new landscaping.	10-20	C2	5.6	100
G4	Box hedge	1	25 - 50					0.0	Mature	Clipped hedge.	Remove to allow new landscaping.	10-20	C2	0.6	1
G5	Privet hedge	1.8	25					0.2	Mature	Growing against building. Bare at base. Ivy.	Remove to allow new landscaping.	5-15	C2	0.3	0
G6	Shrubs	0.5 - 3.5	25 - 125					0.0	Mature	Species include lilac, privet, laurel, holly, bamboo with rose of sharon and periwinkle.	Remove to allow new landscaping.	5-15	C2	1.5	7
T7	Sycamore	12.5	470	3	5.5	4.5	6	3.5	Early mature	Two stems from base - 330 & 340mm. Previously reduced to approx 6.5m. Growing against stone retaining wall and likely to cause structural damage.	Remove to prevent structural damage to retaining wall, and to allow new landscaping	10-20	B-C2	5.6	100
T8	Viburnum	2.5	50	1	1	1	1	0.3	Early mature	Multi stem flowering shrub.	Remove to allow new landscaping.	5-15	C2	0.6	1
T9	Sycamore	12.5	250/290	4.5	2.5	4.5	5	3.5	Early mature	Two trees growing together to form single canopy. Previously reduced to approx 6.5m.	Remove to prevent structural damage to retaining wall, and to allow new landscaping	15-30	B-C2	3.5	38
T10	Sycamore	13	340	0	2.5	4.5	4.5	4.5	Early mature	Stem bifurcates at 4m - tight fork. Previously reduced. Poor crown structure. Low limbs removed.	Remove to prevent structural damage to retaining wall, and to allow new landscaping	10-20	C2	4.1	52
T11	Sycamore	14	170	2.5	2	2.5	4	4	Early mature	Drawn up spindly tree. Low limbs removed.	Remove to prevent structural damage to retaining wall, and to allow new landscaping	10-20	C2	2.0	13

Tree/ Group No.	Species	Height (m)	Stem Diam. at 1.5m (mm)	Branch Spread (m)				Canopy Cleara -nce (m)	Age Class	Observations	Management Recommendations	Estimated Remaining Contribution (years)	BS 5837 Category Grading	Protect -ion Distnce (m)	Root Protect. Area (m2)
				N	S	E	W								
T12	Sycamore	14	240	0	2	4	3.5	3	Early mature	Drawn up. Previously reduced to approx 6.5m. Leader removed. Twisted base.	Remove to prevent structural damage to retaining wall, and to allow new landscaping	5-15	C2	2.9	26
T13	Sycamore	15	420	2.5	3	5.5	6	3	Early mature	Three stems from base - 200, 220 & 300mm. Western stem bifurcated at 1.6m with a tight fork and stems twisting around each other. Poor crown structure.	Remove to prevent structural damage to retaining wall, and to allow new landscaping	5-15	C2	5.0	80
G14	Sycamore	2.5	est 300-370					0.5	Early mature	Two cut stumps with fresh growth. Adjacent section of retaining wall collapsed.	Remove.	<10	U	4.4	62
T15	Sycamore	13	210/300	4.5	3.5	3.5	4.5	3	Early mature	Two trees growing together to form single canopy. Previously reduced to approx 6.5m. Awkward crown structure.	Remove to prevent structural damage to retaining wall, and to allow new landscaping	10-20	B-C2	3.6	41
T16	Goat willow	12	260	5	0.5	6	0	3	Mature	Poor form and structure - twisted and growing to east. Stems removed at 1 and 1.2m, with decay in wounds.	Remove.	<10	U	3.1	31
T17	Sycamore	12.5	330	4.5	4.5	2	5	4.5	Early mature	Stem bifurcates at 1.6m - tight fork. Previously reduced to approx 6.5m.	Remove to prevent structural damage to retaining wall, and to allow new landscaping	15-30	B-C2	4.0	49
T18	Sycamore	11	210	3	3	6	0	5	Early mature	Stem forked at 4m. Previously reduced to approx 6.5m.	Remove to prevent structural damage to retaining wall, and to allow new landscaping	5-15	C2	2.5	20
T19	Sycamore	12	240	0	4	4	1	4.5	Early mature	Growing on edge of retaining wall and will collapse into adjacent site if wall gives way.	Remove.	<10	U	2.9	26
T20	Magnolia	5.5	290	4	2	5	0	1.5	Mature	Five stems, average 130mm - all growing to east. Old pruning wounds and small pockets of decay but good vitality. Poor form.	Remove to allow new landscaping.	5-15	C2	3.5	38
G21	Shrubs	1 - 1.5	25					0	Mature	Species including euonymus, dogwood, smoke bush, laurel, and cotoneaster with ivy and sycamore saplings.	Remove to allow new landscaping.	5-15	C2	0.3	0
T22	Myrtle	1.6	50	0.7	0.7	0.7	0.7	0.2	Mature	Attractive shrub.	Remove to allow new landscaping.	5-15	C2	0.6	1

BS 5837:2012, Table 1 Cascade chart for tree quality assessment

Category and definition	Criteria (including subcategories where appropriate)			Identification on plan
Trees unsuitable for retention (see Note)				
Category U Those in such a condition that they cannot realistically be retained as living trees in the context of the current land use for longer than 10 years	• Trees that have a serious, irremediable, structural defect, such that their early loss is expected due to collapse, including those that will become unviable after removal of other category U trees (e.g. where, for whatever reason, the loss of companion shelter cannot be mitigated by pruning) • Trees that are dead or are showing signs of significant, immediate, and irreversible overall decline • Trees infected with pathogens of significance to the health and/or safety of other trees nearby, or very low quality trees suppressing adjacent trees of better quality *NOTE Category U trees can have existing or potential conservation value which it might be desirable to preserve; see **4.5.7**.*			See Table 2
	1 Mainly arboricultural qualities	**2 Mainly landscape qualities**	**3 Mainly cultural values, including conservation**	
Trees to be considered for retention				
Category A **Trees of high quality** with an estimated remaining life expectancy of at least 40 years	Trees that are particularly good examples of their species, especially if rare or unusual; or those that are essential components of groups or formal or semi-formal arboricultural features (e.g. the dominant and/or principal trees within an avenue)	Trees, groups or woodlands of particular visual importance as arboricultural and/or landscape features	Trees, groups or woodlands of significant conservation, historical, commemorative or other value (e.g. veteran trees or wood-pasture)	See Table 2
Category B **Trees of moderate quality** with an estimated remaining life expectancy of at least 20 years	Trees that might be included in category A, but are downgraded because of impaired condition (e.g. presence of significant though remediable defects, including unsympathetic past management and storm damage), such that they are unlikely to be suitable for retention for beyond 40 years; or trees lacking the special quality necessary to merit the category A designation	Trees present in numbers, usually growing as groups or woodlands, such that they attract a higher collective rating than they might as individuals; or trees occurring as collectives but situated so as to make little visual contribution to the wider locality	Trees with material conservation or other cultural value	See Table 2
Category C **Trees of low quality** with an estimated remaining life expectancy of at least 10 years, or young trees with a stem diameter below 150 mm	Unremarkable trees of very limited merit or such impaired condition that they do not qualify in higher categories	Trees present in groups or woodlands, but without this conferring on them significantly greater collective landscape value; and/or trees offering low or only temporary/transient landscape benefits	Trees with no material conservation or other cultural value	See Table 2

Default specification for protective barrier

Figure 2

Key

1 Standard scaffold poles
2 Heavy gauge 2 m galvanised tube and welded mesh infill panels
3 Panels secured to uprights and cross-members with wire ties
4 Ground level
5 Uprights driven into the ground until secure (minimum depth 0.6 m)
6 Standard scaffold clamps

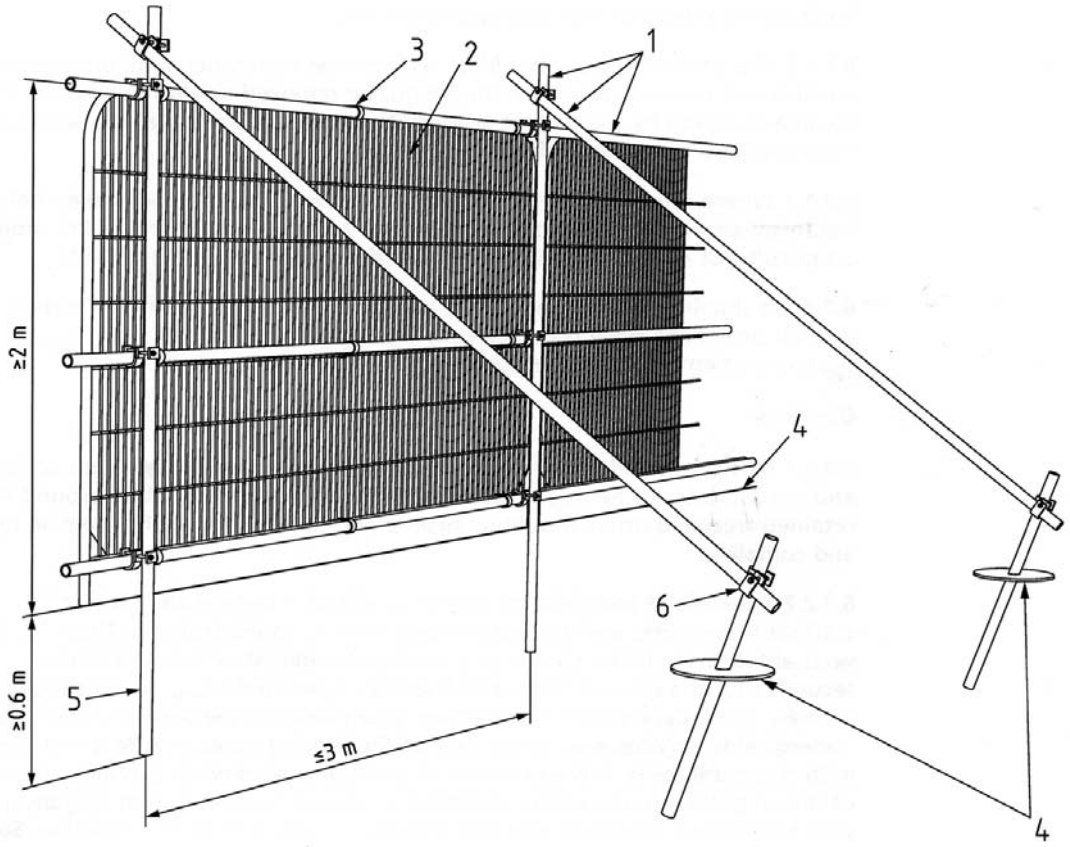

Examples of above-ground stabilising systems

Figure 3a
Stabiliser strut with base plate secured with ground pins

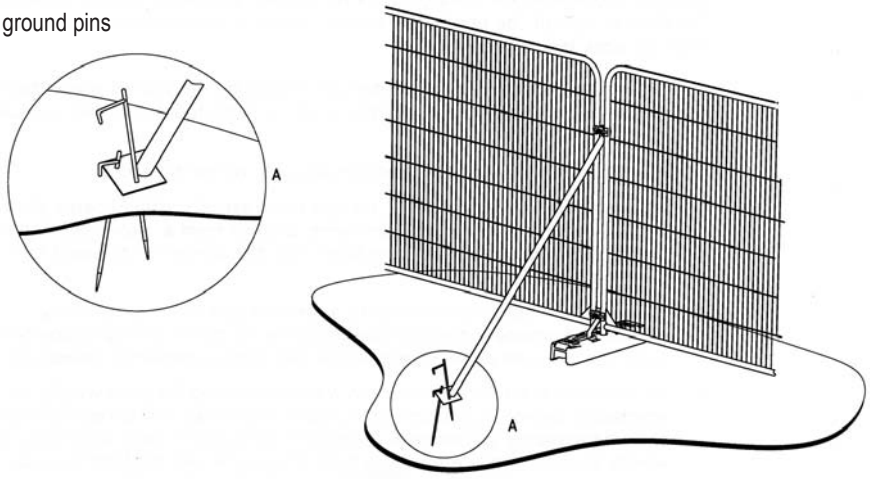

Figure 3b
Stabiliser strut mounted on block tray

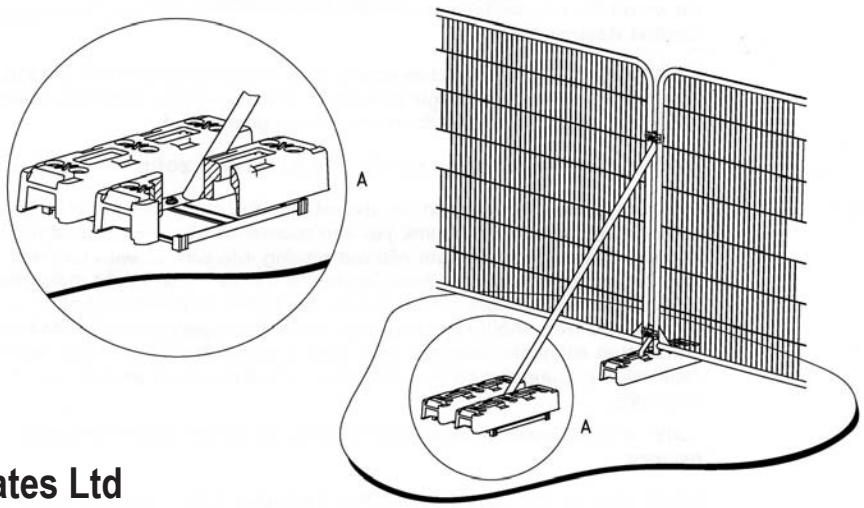

Pollarded lime trees (G1) alongside the eastern boundary wall to be retained, with area around bases to be cleared of loose stone and waste.

Mulberry, T2, to be retained in area of lawn as a feature in new landscape scheme.

Pollarded lime, T3, proposed for removal to allow new tree planting.

View to north along pedestrian footpath.

View of retaining wall between site and Holy Trinity Church.

Trees outside house, at top of retaining wall. Trees are proposed for removal.

View of retaining wall.

This drawing may be scaled with reference to the scale bar for planning application purposes only. Do not scale for any other purpose, use only annotated dimensions. All dimensions are to be checked by parties using the drawing, and any errors or omissions are to be reported to Weston & Co Architects Ltd.

Rev.	Date	Note	Author	Checked
-	-	-	-	-

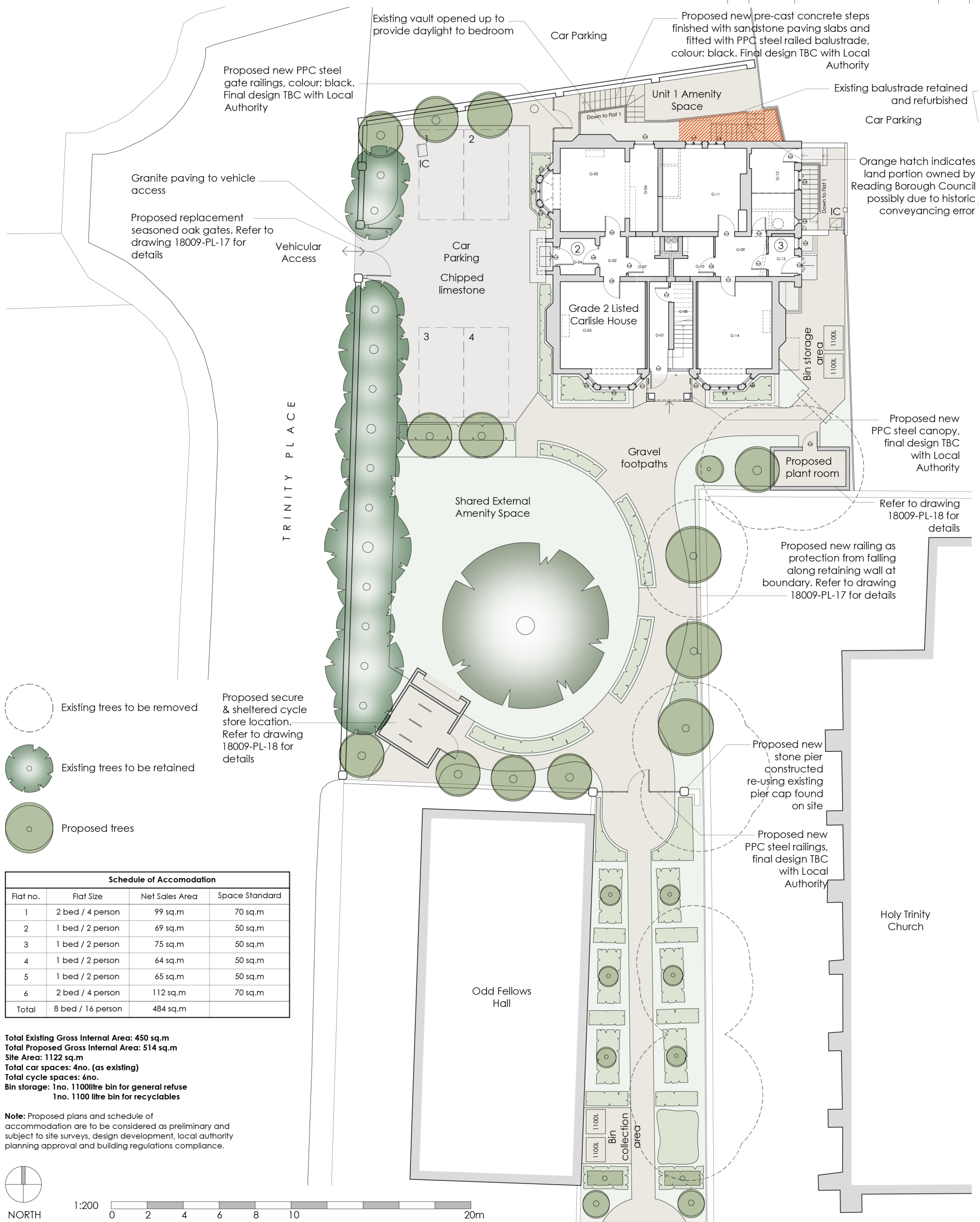

Schedule of Accomodation			
Flat no.	Flat Size	Net Sales Area	Space Standard
1	2 bed / 4 person	99 sq.m	70 sq.m
2	1 bed / 2 person	69 sq.m	50 sq.m
3	1 bed / 2 person	75 sq.m	50 sq.m
4	1 bed / 2 person	64 sq.m	50 sq.m
5	1 bed / 2 person	65 sq.m	50 sq.m
6	2 bed / 4 person	112 sq.m	70 sq.m
Total	8 bed / 16 person	484 sq.m	

Total Existing Gross Internal Area: 450 sq.m
Total Proposed Gross Internal Area: 514 sq.m
Site Area: 1122 sq.m
Total car spaces: 4no. (as existing)
Total cycle spaces: 6no.
Bin storage: 1no. 1100litre bin for general refuse
1no. 1100 litre bin for recyclables

Note: Proposed plans and schedule of accommodation are to be considered as preliminary and subject to site surveys, design development, local authority planning approval and building regulations compliance.

Drawing	Proposed Site Plan			Project	Refurbishement & Alterations Carlisle House, 118 Oxford Road Reading RG1 7NG
Job-Dwg Number	18009-PL-03	Rev.	-		
				Client	Turner Property Ltd
				Status	Planning
				Scale	1/200 — Sheet Size A3
				Author	IG — Checked CTW — Date 04/02/22

WESTON + CO ARCHITECTS

Watlington house
44 Watlington Street
Reading, RG1 4RJ
T. 0118 375 0252

www.weston-co.com

© Weston & Co Architects Ltd.