BAILY GARNER

Design, Access and Heritage Statement
Planning and Listed Building Consent

Cedars Building Refurbishment
Kendrick School
London Road
Reading
RG1 5BN

Prepared on behalf of
Kendrick School
London Road
Reading
RG1 5BN

Job No: **34298**
Date: **22nd July 2022**

Baily Garner LLP
146-148 Eltham Hill,
London SE9 5DY
T. 020 8294 1000
E. reception@bailygarner.co.uk

www.bailygarner.co.uk

Design, Access and Heritage Statement
Planning and Listed Building Consent

Cedars Building Refurbishment
Kendrick School
London Road
Reading
RG1 5BN

Prepared on behalf of
Kendrick School
London Road
Reading
RG1 5BN

Prepared By: **Saul Ames-Reddin BSc (Hons) MRICS**

Authorised for Issue:

Rob Tyler
Rob Tyler (Jul 21, 2022 15:43 GMT+1)

For and on behalf of Baily Garner LLP

Jul 21, 2022

Version	Issue Date	Reason for Issue
1	22nd July 2022	Listed Building Consent & Full Plans Application

Design, Access and Heritage Statement for Listed Building Consent & Full Plans Application

Cedars Building Refurbishment

CONTENTS

1.0 Introduction 3

2.0 Design Process 4

3.0 Site Context and Analysis 5

4.0 Design Principles and Proposals 8

5.0 Access Statement 8

6.0 Conclusion 9

Appendix A - Window Care Specification
Appendix B - Reproduction Stone Data Sheet
Appendix C - The Cedars Official Listing
Appendix D - Photographic Schedule

Design, Access and Heritage Statement for Listed Building Consent & Full Plans Application

Cedars Building Refurbishment

1.0 Introduction

1.1.1 This Design, Access and Heritage Statement has been prepared by Baily Garner LLP on behalf of Kendrick School. It accompanies the Listed Building Consent and Full Plans Application for the proposed refurbishment of The Cedars Building, located within the curtilage of Kendrick School.

1.2 **The proposed works include:**

- The repair and redecoration of existing timber windows and doors
- Sympathetic façade repairs including brickwork, render and pointing
- Redecoration of previously painted external surfaces
- Full replacement of slate roof tiles
- Repair roofline goods to match existing

1.3 **This Statement therefore:**

(i) Provides a review of the site's immediate and wider context.

(ii) Provides a rationale for the scheme's design based on (i).

(iii) Explains and illustrates the design principles.

(iv) Explains how the development will meet the local authority's planning and urban design objectives.

(v) Demonstrates how the proposals meet access for all criteria and inclusivity policies.

2.0 Design Process

2.1.1 The scheme proposals have been designed with recourse to the following process:

2.2 **Assessment:**

2.2.1 A thorough assessment of the site's immediate and wider context (physical and socio-economic) has been made in accordance with the relevant planning policy and design and access framework.

2.3 **Evaluation:**

2.3.1 We have examined the contextual information collected, identified repair methods and constraints, and formulated a design and access approach to the development.

2.4 **Design and Access:**

2.4.1 The assessment and evaluation information have been used to produce the physical development proposals of a high design standard in accordance with CABE quality assessment criteria.

3.0 Site Context and Analysis

3.1 Strategic Context

3.1.1 The Cedars Building is located to the Southeast corner of Kendrick School, within the centre of Reading. It is located on London Road, a major "A" Road linking Maidenhead, Reading and Newbury. The site location can be seen below;

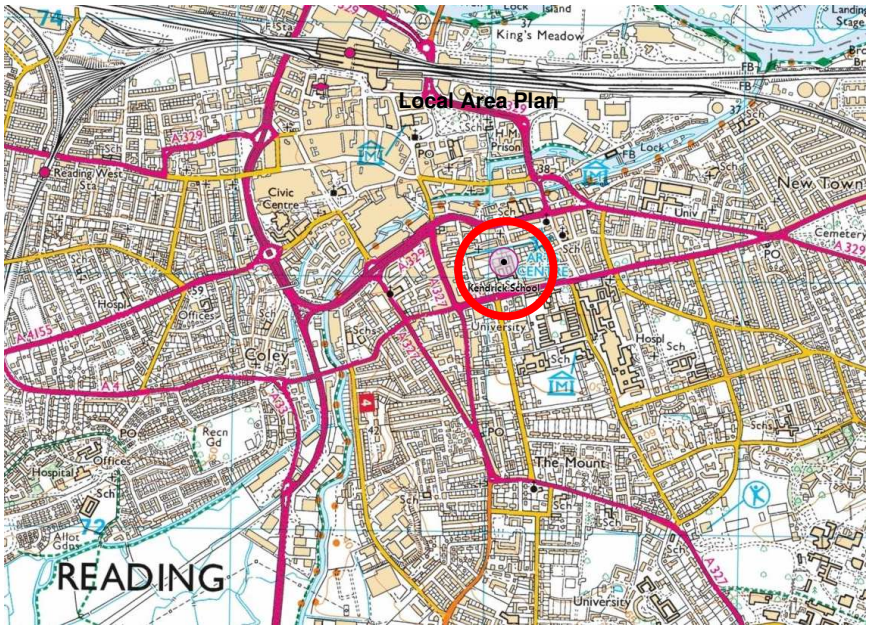

3.2 Local Context

3.3 Due to its central location, the transport links around the estate are varied with the choice of all types of transport including road and train stations, with good links into London.

3.4 Site Description

3.4.1 The Cedars Building is Grade II listed, and part of the Kendrick School estate, constructed in the early 19th Century. The building is across 2 stories, however there is a mid-flight storey to the right of the building viewing from the front, which houses a small WC and an office space when moving towards the rear. The building also has a large basement which extends beneath the entire building. Externally, the front elevation comprises of Stucco render, with string banding under the first-floor cills. The windows to the front elevation are primarily single glazed timber sliding sash, except for the Bull's eye window to the centre of the pediment and glazed side panelling to the main entrance door.

3.4.2 The flank (right) and rear elevations comprise of white painted brickwork. The windows to the right flank elevation comprise of mostly single glazed timber sash, however, there is also a small side hinged window to the back of the mid-flight WC. In addition, there is a large arch-top window providing light to the stairwell.

3.4.3 To the rear elevation the windows are single glazed sliding sash, varying in size. Unique, large, bowed sash windows provide light to the rear bay window.

3.4.4 The roof of the building is hipped with slate roof coverings, and some small flat roofs with a bituminous felt.

3.4.5 The site itself is formed via several independent buildings, all added to the site since the school took occupation in 1927. Cedars Building provides both teaching and ancillary space to the school including Toilets, Offices and Study Rooms.

3.5 Proposed Works – Window Repairs

3.5.1 The existing windows, as mentioned previously, comprise primarily of single glazed timber sliding sash. However, there are a few unique window types, such as the central Bull's eye window to the front elevation, and large arched window to the main staircase.

3.5.2 Over the years, the windows have fallen into disrepair and are exhibiting signs of advanced decay. The windows require urgent repair to ensure their continued operation and avoid full replacement in the near future.

3.5.3 A complete overhaul of the windows is proposed, to bring them back into correct operation. In addition, timber care repairs will also be completed to defective areas. Repair methods may include conservation joints, surface fill, resin repairs and timber splice repairs. All repairs will be carried out to match the existing profile of the window and will be decorated to match existing.

3.5.4 The existing sliding sash windows will be sanded down to a smooth surface, prior to applying the relevant timber repair where defective. Once complete, the timber will be primed and decorated with an exterior white paint to match existing. Repair works to the windows will only be carried out where necessary to increase the longevity of the windows.

3.5.5 The proposed Window Care Repair methodology has been provided at appendix A of this Design Access Statement.

3.6 Proposed Works – Brick Replacement, Re-pointing, and Decorations

3.6.1 The existing brickwork is of traditional construction and consists of white painted red clay bricks and assumed lime mortar. Over time, multiple areas of brickwork have either spalled, become lose, or cracked and are in need of repair.

3.6.2 It is proposed to carry out brick repairs/replacements to the rear elevation, ensuring these are kept to a minimum and are only carried out where necessary. The bricks will be replaced in red clay with lime mortar, as per existing to match the same appearance and profile of brickwork generally.

3.6.3 Following mortar and brick work repairs the rear and side elevations will be redecorated in their entirety, with white paint to match the existing.

3.7 Proposed Works – Render Repairs

3.7.1 The existing Stucco render to the front elevation has deteriorated over time and has begun to spall and crumble in various locations, spoiling the few ornate feature the building has.

3.7.2 Isolated patch repairs works are proposed, where the existing Stucco has begun to deteriorate. The patch repair works will match the existing colour texture and profile.

3.8 Proposed Works – Replacement of Roof Covering

3.8.1 The roof coverings exhibit significant defects and have been identified as life expired in a recent condition survey. The defective roof covering is allowing water to ingress into the building and there is evidence that this is starting to impact the supporting timber structure. Evidence of water ingress within the upper floor rooms can be observed and left untreated, poses a risk to health for the users.

3.8.2 A wholesale replacement of the existing slate roof covering is proposed, including ridge tiles, and led flashings.

3.8.3 The proposed reproduction stone slate data sheet has been provided at appendix B of this Design Access Statement. Samples have been obtained and can be provided on request.

3.9 Proposes Works – Repair Existing Rain-Water Goods

3.9.1 The existing rainwater goods comprise of cast iron eaves gutter feeding into cast iron down pipes. The intension is to retain the existing down pipes, treat and redecorate. The existing downpipes are finished black and will be restored to match existing.

3.10 Proposed Works – Repairs to Timber Facia and Soffit

3.10.1 The existing facias and soffits to the rear elevation have detreated significantly and are currently posing a health and safety risk.

3.10.2 Repair works to the existing timber soffits and facias are required throughout the building, requiring full replacement some areas and decorations in others. All replaced and decorated soffits and facias will be installed to match the existing white painted finish

3.11 Proposed Works – Internal Works

3.11.1 The existing plaster walls are defective in some areas and require re-plastering and decorating to match existing. All plaster repairs and making good will be carried out to match the existing style and appearance of internal walls.

3.11.2 The existing internal floor coverings are damaged within the entrance areas and require replacing. The existing floor finishes are fitted carpet and will be replaced with a heavy duty fitted carpet to provide added durability.

4.0 Design Principles and Proposals

4.1 **Design Principles:**

4.2 **Use**

4.2.1 The existing school will remain unchanged.

4.3 **Intention**

4.3.1 Our proposals seek the refurbishment and repairs of existing elements to match existing appearance to increase the longevity of the building for future years.

4.4 Layout

4.4.1 The internal layouts of the existing building will remain unchanged.

4.5 **Scale**

4.5.1 Works proposed to the building are predominantly to enhance the existing building elements and will therefore have no impact on scale.

4.6 **Landscaping**

4.6.1 Landscape will remain unchanged.

4.7 **Appearance**

4.7.1 Proposals for the necessary refurbishment and maintenance works will improve the aesthetics of the building.

4.8 **Proposals:**

4.8.1 **Window refurbishments, roof covering replacement and general maintenance works**

4.8.2 The existing building and/or building elements will be refurbished in accordance with the scope of works. Traditional repair methods will be undertaken in order to take care and bring into consideration to the listed building status and surrounding conservation area.

4.9 **Flood Risk Statement**

4.9.1 The site is located within Flood Zone 1 (low risk). The residual risk to the site is therefore low.

4.9.2 The proposals for the site do not increase the area of impermeable surfacing and therefore do not increase the surface water run-off from the site. The proposed maintenance works do not therefore increase flood risk to the site or any adjacent sites.

5.0 Access Statement

5.1.1 Access to and around the building remains as existing.

5.1.2 There are no proposed changes to the building, refurbishment and repair works are intended only.

6.0 Conclusion

6.1.1 The site is a Grade II listed building, which is part of the Kendrick School site. It was constructed in the early 19th Century.

6.1.2 The aims for the proposed works include:

- Address urgent health and safety concerns, so that the building can be used as intended.
- Our proposals seek the repair and refurbishment works to several elements of work to extend the life of the building elements. All works will be carried out to match existing in terms of its style and appearance. Additionally, only works which are a necessity will be undertaken.

6.1.3 The proposed works will greatly assist in preserving the historic nature of the buildings.

6.1.4 Overall, in terms of Listed Building Consent, the proposals should be seen as favourable as the main result of the works is to preserve and enhance the existing building.

APPENDIX
WINDOW CARE REPAIR

A

Window Care Specification

County Construction Chemicals
73 Ipswich Road
Woodbridge
Suffolk IP12 4BT
Tel: 0208 524 1931

If you are not already familiar with this system it is expected that before attempting to undertake works contained within this specification you will have obtained a Contractors Information Pack from Window Care Systems.

On-site training for your first project is available from Messrs Window Care free of charge for operatives and supervisors and must be carried out on site before any repair works commence. It is anticipated that half a day will suffice in most situations. A training certificate will be presented to each operative successfully completing the course and you may be asked to show this certificate as proof of training.

This condition is intended to assist the contractor in making the best possible use of the tools and products in the interests of high quality work.

The following schedule enumerates the expected areas of decay, renewal of putties, conservation joints and so on, and the detailed methods for working are as referred to in "A Guide to Specifying Pre-Paint Repairs".

The quantity of repair compound indicated may be at any level or position on the elevation or window and will vary in section and shape. Some decay may penetrate to the internal face of the joinery and repairs are to include for all shapes, situations and levels. Fully penetrating decay will be treated as one repair according to size.

The means of access to the work will be included within the schedule. Any additional access required must be included in the contractor's rates.

Particular attention is to be paid to the storage instructions contained within the literature provided by the manufacturers.

WINDOW CARE REPAIR SYSTEM

Prior to carrying out repairs, remove paint system from areas of decay extending to 10mm beyond repair.

Resin-Only Repairs

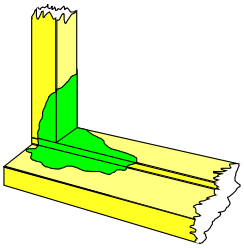

Typical example area identified in sketch: Remove decayed timber using Window Care Profi with round cutter, back to sound timber, check for excess moisture, form up as necessary with perspex slips, apply Dry Fix Wood Stabilizer and after interval apply Dry Flex RP Repair Compound to shape of timber section. When fully cured remove formers and sand sections to shape ready for decoration **(See repair Method No 4).**

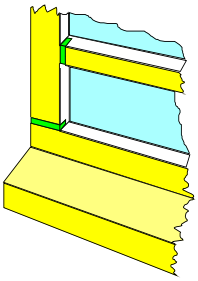

Conservation Joints

Typical example area identified in sketch: To all lower joints where a horizontal member meets a vertical member on main frames, opening and fixed lights, cills and the like, form a conservation joint by opening up the joint to a width of 4mm and a depth of 10mm, checking for decay, removing dust and dirt, apply Dry Fix Wood Stabilizer and after interval apply Dry Flex RP Repair Compound. When fully cured sand to shape ready for decoration **(See Repair Method No 3).**

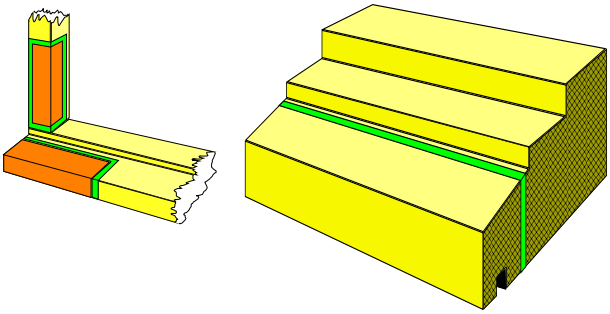

Face Splice of Timbers including Fronts of Cills

Typical example areas identified in sketches: Remove decayed timber to depth indicated below and renew face section of timber with new section to match existing (unprimed on meeting surfaces). Apply Dry Fix Wood Stabilizer to all meeting surfaces and after interval apply Dry Flex RP Repair Compound ensuring a gap of 4mm all round. When fully cured sand to shape ready for decoration **(See Repair Method No 5)**

Renew Cill Timbers Complete

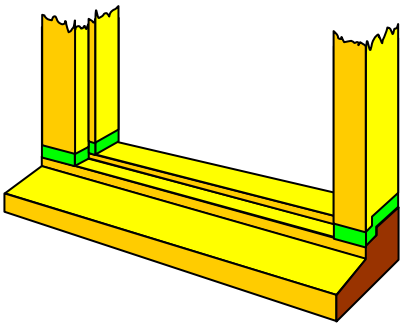

Typical example area identified in sketch: Renew decayed cill complete in hardwood/ softwood (unprimed on meeting surfaces) to match existing section and joint to existing frame and mullions with Dry Fix and Dry Flex RP ensuring a minimum 4mm joint of Dry Flex. When fully cured sand to shape ready for decoration. Assume 2 joints per 900mm **(See repair Method No 6).**

Renew Full Section of Frame or Mullion

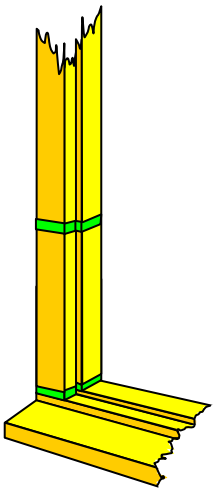

Typical example area identified in sketch: Renew decayed section complete in softwood (unprimed on meeting surfaces) to match existing section and joint to existing section at both ends with Dry Fix and Dry Flex RP ensuring a minimum 4mm joint of Dry Flex. When fully cured sand to shape ready for decoration **(See Repair Method No 6).**

Renew Complete Bottom Rail To Sash or Door

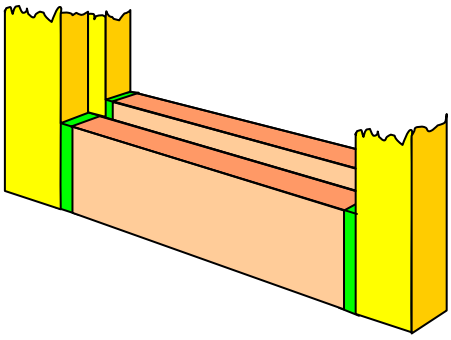

Typical example area identified in sketch: Renew decayed section complete in softwood (unprimed on meeting surfaces) to match existing section and joint to existing section at both ends with Dry Fix and Dry Flex RP ensuring a minimum 4mm joint of Dry Flex. When fully cured sand to shape ready for decoration **(See Repair Method No 6).**

End Grain Treatment To Exposed Ends Of Cills

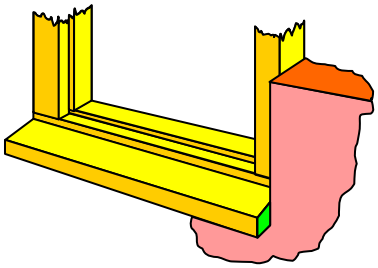

Typical example area identified in sketch: New And Existing Timbers Clean back existing timbers with Profi and to new and existing timbers apply Dry Fix and surface fill with Dry Flex RP. Sand to shape after curing.

Glazing Beads

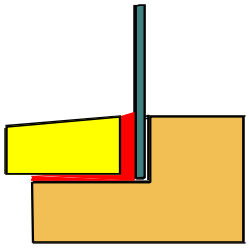

Typical example area identified in sketch: Remove all glazing beads to lower and sides of glazed openings and replace with rounded flush fitting beads (pressure treated), end grain sealed with Dry Flex SK and primed all round and bedded in Dry Seal Elastic Glazing Compound 2mm thick to both meeting surfaces **(See Repair Method No 9.2 & 10)**

Dry Pin Local Preservation

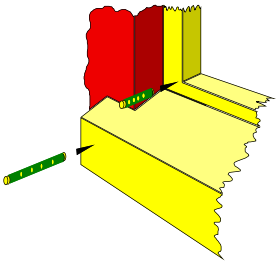

Typical example area identified in sketch: Drill and insert Dry Pins (See Product Sheet).

Face Putties

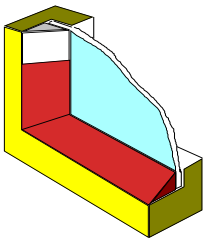

Typical example area identified in sketch: Remove all lower and vertical putties 50mm from horizontal and replace with Dry Seal Elastic Glazing Compound **(See Repair Method No 9.1 & 10).**

Back Putties or Internal Putty Line

Remove all lower and vertical back putties 300mm from horizontal using the Profi Assist Kit and replace with Dry Seal Elastic Glazing Compound **(See Repair Method No 12).**

Arrisses

Remove sharp edges to all vertical and upper horizontal arrisses and round off using Window Care Profi Assist Kit **(See Repair Method No 7).**

Knots

Cut out surface of all knots to a depth of 10mm using Profi fitted with round cutter on horizontal members and up to100mm on vertical sections.

General Repair Items

Overhauling Sliding Sash Windows

Remove sliding sashes, ease as necessary, renew cords, check and lubricate pulleys. Fit new parting bead where damaged. Check action of catches and security fittings where fitted, lubricate and ease as necessary. Leave all parts of sliding sash window in good working order.

Overhauling Casement Sashes

Remove and rehang as necessary including removal of excess paint from frame and sash. Ease, refit sash, adjust catches and security devices where fitted, lubricate and leave in good working order.

Draught Proofing Sliding Sash Windows
Method Statement

Remove staff beads all round, release weights, remove inner sash, remove parting beads and remove outer sash. Ease sashes for width if necessary, ease for length to accommodate brush seals and at meeting rail also to accommodate brush seal. Rout out sashes and fit brush carriers, refit outer sash and fit new (removable) brush seal parting beads, adjust weights, renew cords, renew chains and other fittings as necessary. Refit inner sash as above and fit new staff bead incorporating brush seals and position to give ease of movement to sash. On completion, test for correct working, both sashes should slide easily, non-moving at any level and casement fasteners should locate and release with ease. Any security fittings should also locate without difficulty. Check for excess movement and for any rattles.

Typical arrangement

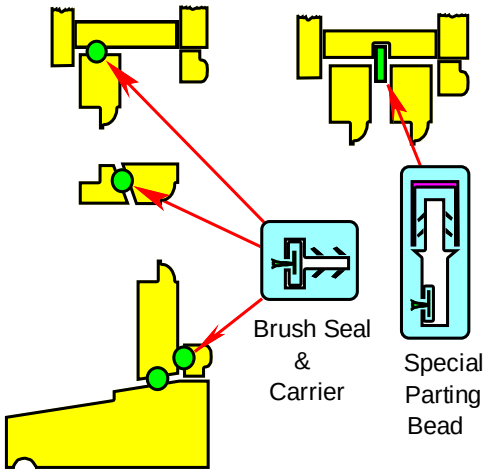

Draught Proofing Opening Casements and Doors (where required)

Rout out frame or sash as appropriate and fit cranked blade wiper seal with minimal resistance to opening or closing. This seal is weather energised and tightens as wind pressure increases. This operation to be carried out on all opening windows and doors but excluding the sliding sash windows for which see preceding item.

Typical arrangement

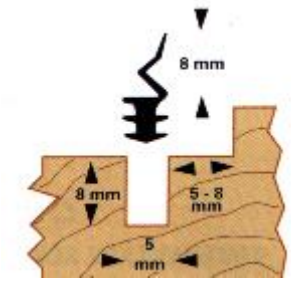

Prime Bare Timbers

On completion of Window Care Repairs prime all bare timbers in accordance with painting specification.

The Following Are Typical Recommendations For Repairing and Conserving Timber Joinery

Removal of Paint Finish

Remove paint from the areas to be treated or repaired. In this instance we would suggest the bottom rails of the sashes and the cills to at least 10mm beyond any repair. Use a warm air stripper and avoid charring of timbers as this will affect adhesion of repair compound. Note: You may consider that more paint removal will be necessary to effect easing of sashes and for a quality finish.

Bottom Glazing Line

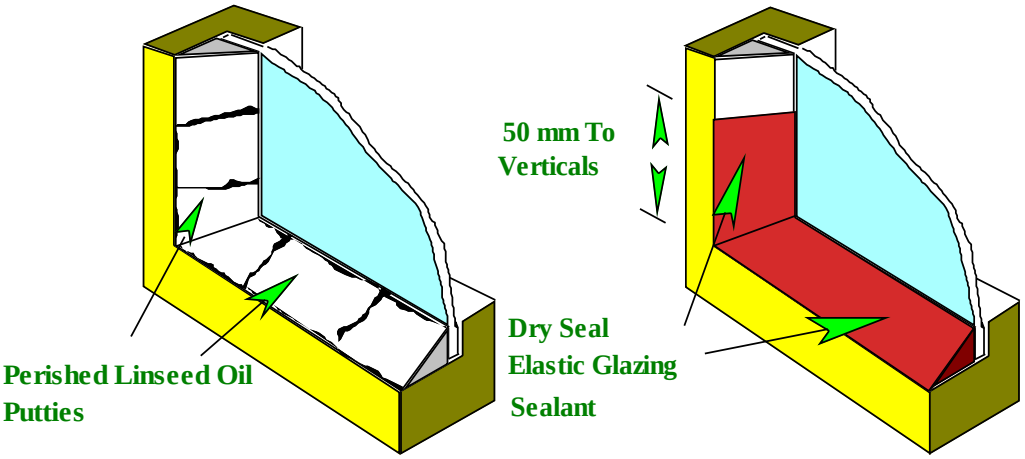

Remove bottom glazing putties including a minimum of 50mm to adjacent verticals and replace with DRY SEAL elastic glazing sealant. This will effectively seal the glazing line from moisture penetration and prevent moisture reaching the frame joints and rebates. See repair methods 9 & 10.

Glazing Beads

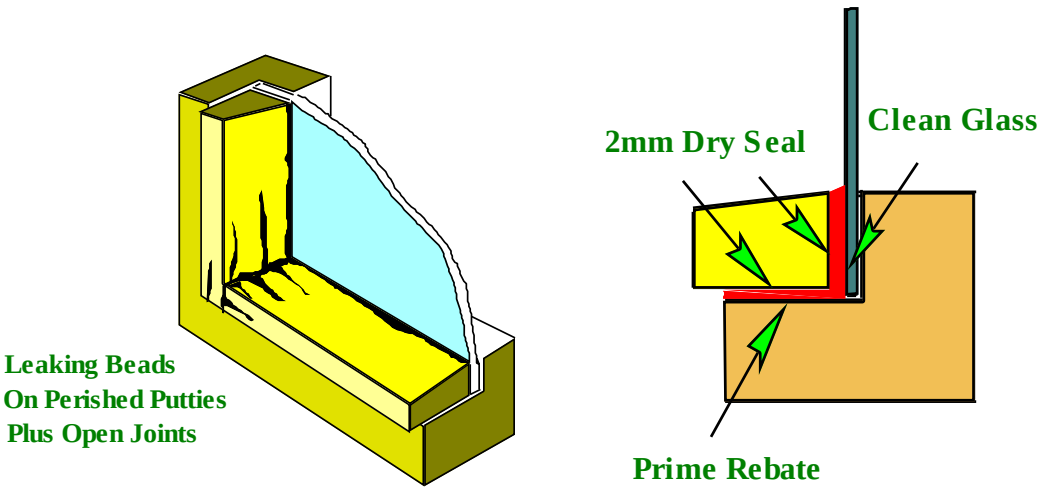

Remove bottom and side glazing beads and renew to same or revised section bedded in 2mm of DRYSEAL elastic glazing sealant. This will effectively seal the glazing line against moisture penetration and prevent moisture reaching the frame joints and rebates. See repair methods Nos 9 & 10.

Back Putties or Internal Glazing Line

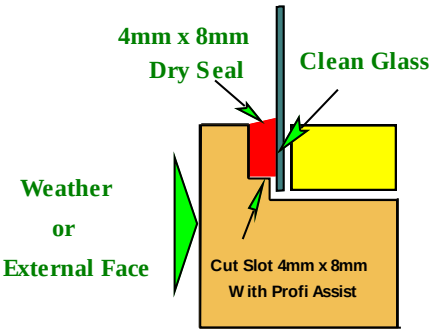

Using the PROFI ASSIST cut out the back putties to a depth of 4 - 8mm on the bottom and up to 300mm on the vertical glazing line and apply DRYSEAL elastic glazing compound in accordance with our recommendations. This will effectively seal the glazing line against moisture penetration and prevent moisture reaching the frame joints and rebates. See repair method No 12

Open Joints

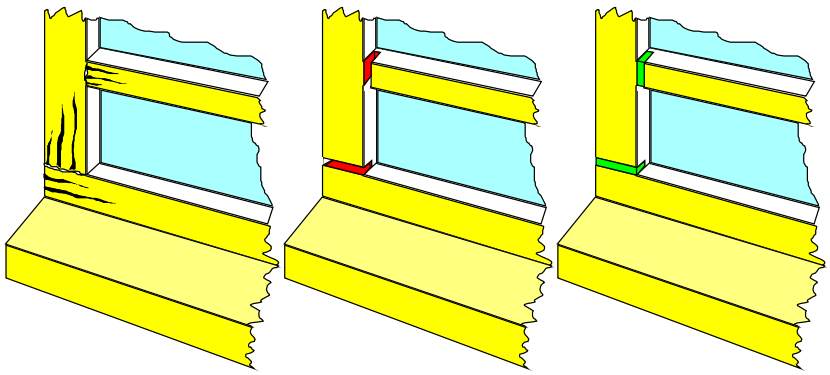

To the bottom joint lines of sashes, mullions and frames to cills, ends of transoms and sound old splices, using the PROFI with straight cutter, cut open the joint to a width of 4mm and a depth of 10mm, check for moisture content using the WOOD CONDITION METER, apply DRY FIX, allow for penetration and fill with DRY FLEX RP. After curing, sand off and apply paint finish. This will effectively seal the joints and prevent further moisture penetration and movement and, if done properly, the hair line cracking normally a feature at these joints will not re-appear. See repair method 3.

Areas of Decay

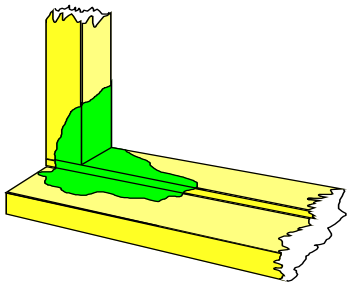

Remove decayed areas back to sound timber using the PROFI with round cutter. Check for moisture content using the WOOD CONDITION METER, apply DRY FIX, allow for penetration and fill with DRY FLEX RP. After curing, sand to shape and apply paint finish. This will give a permanent repair to the areas affected by wood decay, it will be stronger than the original timber and is flexible enough to allow movement without loss of strength or adhesion. See repair method 4.

Excessively Damaged Cills

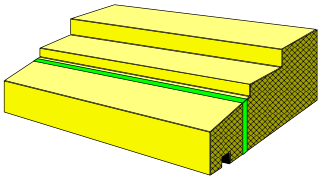

Where cill sections are excessively damaged by decay the fastest and most economical method of repair is to replace the section affected for the full width of the window. This involves cutting away the front section of the cill back to the first rebate line, checking moisture content of old timber and bonding on a new section (having sealed the end grain) using DRY FIX and DRY FLEX RP ensuring that a cushion of repair compound of at least 4mm is present, allow to cure and sand to shape as before and apply paint finishes. This will quickly achieve an economical repair and the joint between the old and the new timber will remain bonded and the whole will act as a complete new cill. See repair method 5.

Renewal of Timbers

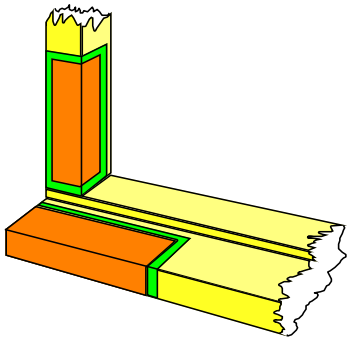

Splicing in of new timbers is easily achieved using the methods described above remembering to provide the 4mm cushion of DRY FLEX RP all round the repair. See repair method 5.

Treatment of Knots

Cut back the area of the knot to a depth of at least 5mm using the PROFI with round cutter. Check for moisture content using the WOOD CONDITION METER, apply DRY FIX, allow for penetration and fill with DRY FLEX RP. After curing, sand to shape and apply paint finish. This will permanently seal the knot and prevent future paint breakdown. The procedure is similar to repair method 4.

In-Situ Preservative Capsules

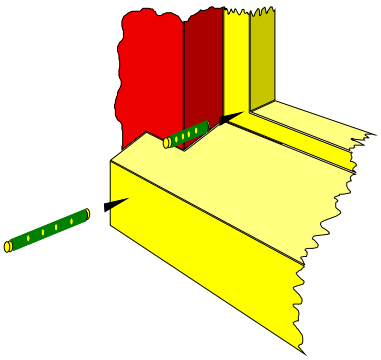

Where the timbers are vulnerable to moisture penetration from adjacent brickwork or a masonry cill it will be beneficial to introduce DRY PINS to give local preservation. These are designed to remain inert unless the moisture content in the surrounding timber rises above the level where decay could start and at that level the contents diffuse into the timber giving similar protection to that of pressure treatment. In this case we would suggest that DRY PINS should be sited at ends of cills and outer section of box near joint with cill. See Systems Brochure for further details.

Treatment of Exposed End Grain (Ends of Cills)

Using the PROFI with round cutter cut back the end grain to sound timber. Check for moisture content using the WOOD CONDITION METER, apply DRY FIX, allow for penetration and surface fill with DRY FLEX RP. After curing, sand to shape and apply paint finish. This will give an effective seal to the end grain and prevent the uptake of moisture at this point. Procedure is similar to method 4.

REPAIR METHOD NUMBER 3

Conservation Of Wooden Joints On Existing Joinery

1. Remove the existing finish around the joint. Ensure that up to a minimum of 10mm from the vicinity of the joint, the timber is sanded back to bare shiny wood.

2. Cut open the existing joint to a width of 4mm and a depth of 10mm with the Window Care Profi, using a Straight Cutter.

3. Sand the "Open Joint" using a medium grade abrasive paper and remove the dust/dirt completely.

4. If the moisture content of the wood is above 18%, blow dry the joint using a Hot Air Blower at a temperature of 60-80°C.

   Use the Window Care Wood Condition Meter CSI to check the moisture content.

5. Mix the required quantity of Window Care Dry Fix Wood Stabilizer in the correct ratio.

   Apply the Dry Fix well into the joint using a small brush. Wipe off the excess Dry Fix.

   Leave for 30 minutes before sealing the "Open Joint" with Dry Flex RP.

   Work the Dry Flex RP into the seam and seal the joint.

   Allow the Dry Flex RP to dry for at least 24 hours at 20°C.

   The drying time may take 2-3 days at lower temperatures.

   Use the Window Care Scraper to remove 'excess' cured Dry Flex RP if necessary.

   Sand the sealed joint to a smooth, even finish.

   Remove dust/dirt.

   Apply the decorative/protective paint finish.

   - Wooden joints affected by excessive insitu wood decay - Continue to cut out the decayed wood until sound timber is reached.

   - Check that the moisture content of the timber is below 18% before applying the Dry Fix/Dry Flex RP.

   - Check with the Contract Administrator, if, Window Care DRY PIN is to be used.

   - Where applicable, DRY PIN should be applied as illustrated in the "Systems" Brochure.

     A test application is always advisable before commencing work.

REPAIR METHOD NUMBER 4

Repair Of Decayed Wood With Window Care Dry Flex RP

1. Window Care Dry Flex RP allows insitu repair of timber affected by wood decay. It is advisable to take into account the strength of the constructlon after repair. For example, in situations where the timber is "load bearing", it may be appropriate to use timber splice in accordance with Repair Method Number 5.

2. Remove all decayed wood with the Window Care Profi using the Round Cutter. Continue to remove the decayed wood until sound timber is reached.

   The sound timber can be recognised by the high-pitched sound of the Window Care Profi, it is generally of harder structure and uniform colour.

3. Lightly sand the surface of the timber using a medium grade abrasive paper. Check that the moisture content is below 18% using the Window Care Wood Condition Meter CS1. Apply hot air using a Hot Air Blower at 60-80°C. Avoid burning the timber fibres, this ensures good adhesion of Dry Flex RP.

4. Ensure that the adjoining paint system is removed up to l0mm from the vicinity of the repair.

5. Mix the required quantity of Dry Fix Wood Stabilizer in the correct ratio.

   Apply the Dry Fix well into the surface us'ing a small brush. Wipe off any excess Dry Fix.

   Leave for 25-30 minutes before applying the Dry Flex RP.

6. Mix the Dry Flex RP thoroughly until a homogeneous "butter-like" mass is achieved.

7. Apply the Dry Flex RP using plastic modelling knives available from Window Care Systems Limited. For more complex repairs use perspex plates for "shuttering."

8. Apply hot air to the surface of Dry Flex RP for a few minutes. This is optional and is only recommended at times when wet weather can be anticipated or application at low temperatures.

9. Ensure that the Dry Flex RP is completely dry (normally 24 hours are required at 20°C) and longer periods when applied under low temperature conditions.

10. Use the Window Care Scraper to remove 'excess: cured Dry Flex RP.

11. Sand the repaired areas lightly to achieve an even, smooth surface before painting with an alkyd or water-based paint system.

    - Check with the Specifier, if, Window Care DRY PIN is to be used.
    - Where applicable, DRY PIN should be applied as illustrated in the "Systems" Brochure.

A test application is always advisable before commencing work.

REPAIR METHOD NUMBER 5

Repair Of Decayed Wood By "Splicing In Timber"

Cut out the decayed wood at an angle of 75° until the sound timber is reached- The timber may be cut using a saw, chisel or Window Care Profi.

The strength of the construction after repair should be taken into account. In situations where the timber is "load bearing", the use of steel reinforced rods may be necessary.

For normal repair by "splicing in timber", follow the procedure below:

1. Prepare the new timber splice (moisture content ‹18%) in such a way that there is a seam/gap of at least 4mm between the contact areas, use the Window Care Wood Condition Meter CS1 to measure the moisture content.

2. If the contact areas of the existing wood have a moisture content of over 18%, blow dry the affected area using a hot air blower at a temperature of 60-80°C. Strip the existing paint finish up to at least 10mm from the joint on existing timber.

   Ensure that the new timber is left clean and un-primed during the fixing process.

3. Apply Window Care Dry Fix Wood Stabilizer to the end grain of the existing timber and the new timber splice using a brush. Work the Dry Fix well into the surface. Leave for about 25.30 minutes.

   Apply Dry Flex RP on all areas of contact (already treated with Dry Fix).

Use a 4mm "space" at the joint and secure the new timber splice in position using a perspex fixing plate. Fill the "joint" with Dry Flex RP and smooth the surface using a plastic knife.

Avoid any surface irregularities.

4. Allow at least 24 hours drying at 20°C before any surface sanding and subsequent painting.

   At lower temperatures allow a longer period of time for Dry Flex RP to dry.

   The fixing plate can be removed when the Dry Flex RP has dried completely.

Use the Window Care Scraper to remove 'excess' cured Dry Flex RP.

Sand the Dry Flex RP lightly. Remove dust/dirt before painting with an alkyd or water-based' paint system.

- Check with the Contract Administrator, if, Window Care Dry Pin is to be used.

- Where applicable, DRY PIN should be applied as illustrated in the "Systems" Brochure.

  A test application is always advisable before commencing work.

REPAIR METHOD NUMBER 6

Replacement of Entire Styles/Sills Affected by Wood Decay

1. Remove the decayed style/sill. Check if the contact areas of the existing wood are affected by wood decay. Remove all the decayed wood using a Window Care Profi until sound timber is reached.

2. If the contact areas of the existing wood have a moisture content above 18%, blow dry the surface using a hot air blower at a temperature of 60-80°C, use the Window Care Wood Condition Meter CS1 to measure the moisture content.

3. Remove the existing paint to at least 10mm from the joint.

4. Cut the new style/sill to a size to allow a 4mm seam/gap at each contact point. Apply a coat of decorative/protective finish all around before fixing. A dry thickness of 40 microns of the protective finish is recommended.

   Ensure that the meeting surfaces of the existing timber and the new timber is left clean and un-primed during the fixing process. The painting of the end-grain is not necessary in view of the water sealing capacity of Dry Flex RP.

5. Wet the contact areas of the existing and the new wood using the Window Care Dry Fix - Wood Stabilizer with a brush. Work the Dry Fix well into the surface. Leave for about 25 - 30 minutes. Apply Dry Flex RP on all areas of contact (already treated with Dry Fix).

6. Insert the new style/sill using a 4mm "spacer" at the joint and secure the new timber position using a Perspex fixing plate.

   Fill the "joint" with Dry Flex RP and smooth the surface using a plastic knife. Avoid any surface irregularities.

7. Allow at least 24 hours drying time at 20°C before any surface sanding and subsequent painting. At lower temperatures, allow a longer period of time for Dry Flex to dry.

   The fixing plates can be removed when the Dry Flex RP has dried completely. Sand the Dry Flex lightly. Remove dust/dirt before painting with an alkyd or water based paint system.

   Use the Window Care Scraper to remove 'excess' cured Dry Flex RP.

   - Check with the Specifier, if, Window Care DRY PIN should be used.

   - Where applicable, DRY PIN should be applied as illustrated in the "Systems" Brochure.

     A test application is always advisable before commencing work.

REPAIR METHOD NUMBER 7

Rounding of sharp and Weathered Edges

1. Inspect the sides of the styles and sills for sharp and weathered edges.

2. Round the horizontal and vertical edges using the Window Care Assist.

3. Adjust and set the cutter on the Window Care Assist to achieve a smooth and a round edge. A test application is advisable.

4. Use the slant side of the Base Plate of the Window Care Assist if the style or sill is of the water shedding type and the flat side if the style or sill is flat.

5. After rounding the edges there should not be any grey spots in the wood. If there are, repeat the procedure.

6. If during the rounding of sharp edges, there are raised wood fibres or holes, this is generally due to the cutting action against the direction of wood grain. Working in the opposite direction will reduce/prevent the problem.

7. If the moisture content of the wood is high, blow dry the timber using a hot air blower before rounding the edges, use the Window Care Wood condition Meter CS1 to measure the moisture content.

8. After rounding the edges, sand lightly with a fine abrasive paper. Remove dust/dirt before finishing.

   A test application is always advisable before commencing work.

REPAIR METHOD NUMBER 9

Renewal Of Glazing Putty/Mastic On Existing Wooden Windows And Doors

Before commencing work, all timber repairs should be carried out with the appropriate Window Care Repair Method.

The existing putty/mastic should be removed with care to prevent breakage of glass.

1. **Face Glazed/Putty Glazed Windows And Doors.**

   a) Partial Renewal Of Existing Putty/Mastic

   Completely remove the existing putty/mastic affected by the breakdown on the horizontal glazing line and take it 50mm to the vertical. Lightly sand the rebate using a medium/fine grade abrasive paper. Remove dust. Degrease the affected area using a cellulose thinner applied with a lint free cloth.

   Allow the surface to dry completely. Apply Dry Seal - A Glazing Sealant available from Window Care Systems Ltd.

   Cut the nozzle of the Dry Seal tube at a 450 angle. Apply the Dry Seal with a sealant gun. Use a Dry Seal Applicator to achieve a smooth finish. Remove any excess Dry Seal.

   b) For Complete Renewal OfPuttv/Mastic

   Remove the existing putty/mastic completely and follow the procedure outlined in a) above.

2. **Bead Glazed Windows And Doors**

   Bead glazed windows and doors affected by' the breakdown of existing putty/mastic.
   Rake out the perished putty/mastic to a depth of 4-8mm on the horizontal glazing line and take it
   50mm to the vertical. Remove all dust/dirt and degrease the affected area with a cellulose thinner.
   Allow the degreased area adequate time to dry completely.
   Apply the Dry Seal with a sealant application gun. Work the Dry Seal well into the joint. Use a Dry Seal Applicator to achieve a smooth finish.

3. **Renewal Of Perimeter Sealant**

   Remove the existing perimeter sealant. Lightly sand the affected area using a medium/fine grade abrasive paper. Remove dust. Degrease the surface using a cellulose thinner. allow the surface to
   dry completely. -

Apply the Dry Seal with a sealant application gun. Use a spatula to achieve a smooth finish. In all cases. allow at least 48 hours before painting.

Ensure that the moisture content of the timber is below 18% before applying the DRY SEAL. Use the Window Care Wood Condition Meter CS1 to measure the moisture content.

A test application is always advisable before commencing work.

REPAIR METHOD NUMBER 10

Renewal of Glazing Beads and Putty

Glazing Beads

The glazing bead should be of the correct size. The width of the glazing bead should be measured to allow a minimum of 2mm gap between the glass and the bead. The design of the bead should be such as to have a good water-shedding profile and rounded edge.

The glazing bead should be constructed from Douglas Fir (if softwood) and vacuum impregnated with an organic solvent based preservative pre-treatment. The pre-treatment should be allowed to dry completely before finishing.

Apply one coat of the decorative finish all around before fixing.
The glazing bead should be flush in line with the vertical/horizontal rail.

When cross-cutting the bead, treat the end-grain with a fast drying solvent based primer.
Use galvanised or sheradised fixings of the Correct size.

Bed the glazing bead in Window Care Dry Seal. Set a distance of 2mm between the glass and the bead.

Place the fixings at l00mm distance from each end and approximately 150mm thereafter.

Gun-in the Dry Seal into the gap between the glass and the bead.
Smooth to an even finish using the Dry Seal Applicator. Remove any access Dry Seal.

Ensure that the gap between the rebate and the bottom of the bead is completely sealed as well as the gap between the glass and the bead.

Allow a gap of 5mm between the horizontal and the vertical bead. Fill the gap with Seal.

Thoroughly remove any surplus Dry Seal from the surface of the timber and glass.

Allow the Dry Seal at least 48 hours before finishing.

- Counter-sink the fixings. Fill the fixing-holes with Dry Seal.

- Ensure that the moisture content of the timber is below 18% before applying the DRY SEAL. Use the Window Care Wood Condition meter CS1 to measure the moisture content.

Puttied Windows

Remove the existing putty carefully (without breaking the glass) from the horizontal glazing line and up 50mm to the vertical. Remove the putty from the rebate completely. Sand the rebate with a medium grade abrasive paper. Remove dust/dirt and degrease

the surface by wiping it with a lint free cloth using white spirits or preferably a cellulose thinner. Allow the surface to dry completely before applying the window Care Dry Seal

- Where possible it is beneficial if the rebate can be primed using a solvent based fast-drying primer prior to glazing with Dry Seal.

  A test application is always advisable before commencing work.

APPENDIX
REPRODUCTION STONE DATA SHEET

B

SIGA HERITAGE
REPRODUCTION STONE

Technical Data

SIGA HERITAGE SWEPT VALLEY

SIGA Heritage manufacture a Centre Valley Slate to create a traditional swept valley.

The wider slates on the left and right of the valley are cut from the main slates to course in with the batten schedule programme either side of the valley.

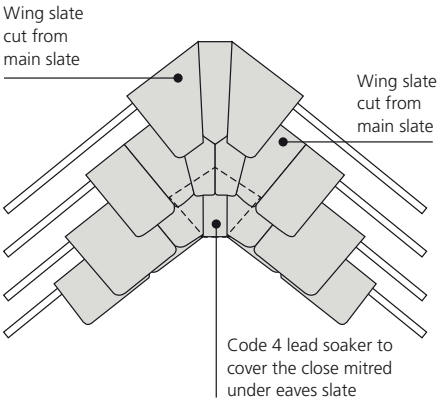

Slate Sizes

Main Slates

HEIGHT \ WIDTH	4"	6"	8"	10"	12"	14"	20"
10"	✓	✓	✓		✓		
12"	✓	✓	✓		✓		
14"	✓		✓	✓		✓	✓
16"	✓		✓	✓		✓	✓
18"		✓	✓	✓		✓	✓
20"			✓	✓		✓	✓
22"			✓		✓	✓	✓
24"			✓		✓	✓	✓

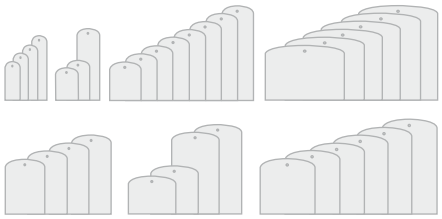

Top Slates

HEIGHT \ WIDTH	4"	6"	8"	10"
7"	✓	✓	✓	✓

Under Eaves

HEIGHT \ WIDTH	18"	20"
12"	✓	
17"		✓

Minimum Pitch (127mm lap)	
Moderate Exposure	20°
Severe Exposure	25°
Double Felt and Boarding Recommended (Flat Roof Specification)	
Maximum Pitch	90°
Typical Laps (mm)	75, 100
Covering Capacity (Net Slates/m²)	Various
Weight of Slating (Approx, kg/m²)	
75mm Lap	65
100mm Lap	72
127mm Lap	79
Battens Required (Net lin.m/m²) - 50 x 25mm	
75mm Lap	6.25
100mm Lap	6.40

Batten Size Recommended (fixed to BS 5534)

50 x 25mm for rafters/supports not exceeding 600mm centres

38 x 25mm required for 10" and 12" size slates - refer to batten schedule provided

Fixing

Hang on recommended battens with Slate Pegs: 40mm Reinforced Nylon or Aluminium. Gables, Junctions and Ridges to be mechanically fixed at all times.

Mechanical Fixing

Only required for 47 degree roof pitches and over or 27 degree and lower

3" Headlap fix to 5th course over pitches 47 degree

4" Headlap fix to 4th course under 27 degree to 24 degree

5" Headlap fix to 5th course under 24 degree to 20 degree

Nails: 40mm Clout to BS1202, A good quality nail such as aluminium alloy should be used for the main slating. Pitches above 55° nail twice at every course. Do not nail too tightly.

Tested to BS EN 492:2004

This product is a "Proprietary Product" it is therefore outside the scope of BE 5534:2014 (Slating and tiling for pitched roofs and vertical cladding). Code of practice) and installation should therefore be carried out in accordance with manufacturer's instructions.

SIG ROOFING

SIG Roofing,
Harding Way, St Ives,
Cambridgeshire,
PE27 3YJ

Tel: 01480 466777
Fax: 01480 302586

Email: info@sigroofing.co.uk
Web: www.sigroofing.co.uk

APPENDIX
THE CEDARS OFFICIAL LISTING

C

Official list entry

Heritage Category: **Listed Building**

Grade: **II**

List Entry Number: **1113504**

Date first listed: **14-Dec-1978**

Statutory Address 1: **THE CEDARS, 37, LONDON ROAD**

Statutory Address 2: **THE KENDRICK SCHOOL, 37, LONDON ROAD**

This List entry helps identify the building designated at this address for its special architectural or historic interest.

Unless the List entry states otherwise, it includes both the structure itself and any object or structure fixed to it (whether inside or outside) as well as any object or structure within the curtilage of the building.

For these purposes, to be included within the curtilage of the building, the object or structure must have formed part of the land since before 1st July 1948.

Understanding list entries *(https://historicengland.org.uk/listing/the-list/understanding-list-entries/)*

Corrections and minor amendments *(https://historicengland.org.uk/listing/the-list/minor-amendments/)*

Location

Statutory Address: **THE CEDARS, 37, LONDON ROAD**

Statutory Address: **THE KENDRICK SCHOOL, 37, LONDON ROAD**

The building or site itself may lie within the boundary of more than one authority.

District: **Reading (Unitary Authority)**

Parish: **Non Civil Parish**

National Grid Reference: **SU 71993 72956**

Details

LONDON ROAD 1. 5128 (North Side) No 37 (The Kendrick School) (The Cedars) SU 7172 NE 4/155 SU 7272 9/155 II GV 2. Early C19 set back from raid. 2 storeys and attic. Stucco with string under 1st floor cills. Plinth, hipped slate roof. Central portion pedimented with wide, flat eaves on flat brackets. Bull's eye window in centre of pediment. 3 windows on 1st floor, glazing bars gone. Central segmental arched doorway. Double doors, each 3 panels. Side lights

separated from doors by strip pilasters; small cornice and radiating and wreathed fanlight over. Doorway flanked by Doric pilasters, apparently Portico removed. Doorway approached by stone steps is flanked by panels under 1st floor windows. 2 storey, 1 window wing on each side (altered to right) of pedimented portion with shallow eaves. Modern additions to left. The rear is white stucco with a full height 3 window bow to right with glazing bar sashes and deep bracketed eaves.

Listing NGR: SU7199372956

Legacy

The contents of this record have been generated from a legacy data system.
Legacy System number: **38999**

Legacy System: **LBS**

Legal

This building is listed under the Planning (Listed Buildings and Conservation Areas) Act 1990 as amended for its special architectural or historic interest.

Map

This map is for quick reference purposes only and may not be to scale.
This copy shows the entry on 19-Jul-2022 at 22:17:10.

© Crown Copyright and database right 2022. All rights reserved. Ordnance Survey Licence number 100024900.© British Crown and SeaZone Solutions Limited 2022. All rights reserved. Licence number 102006.006.

Use of this data is subject to **Terms and Conditions** *(https://historicengland.org.uk/terms/website-terms-conditions/)*.

End of official list entry

APPENDIX
PHOTO SCHEDULE

D

BAILY GARNER

Kendrick School, Cedars Building Photo Schedule

Photo 1: defective slate tiling

Photo 2: defective slate tiling

Photo 3: defective soffit

Photo 3: main entrance door condition

Photo 5: window and rain water goods

Photo 6: defective putty

Photo 7: general window to rear

Photo 8: general window to rear

Photo 9: defective cill

Photo 10: general window to rear

Photo 11: general deterioration window to rear

Photo 12: general window to rear

Photo: 13 defective timber

Photo 14: general window to rear

Photo 15: general window to rear

Photo 16: general window to rear bay window

Photo 17: general window to rear

Photo 18: defective timber soffit

Photo 19: defective timber soffit

Photo 20: front elevation