Constructive configuration models TD-160 to TD-800

Range of low profile in-line mixed flow duct fans manufactured in tough reinforced plastic (from 160 to 2000 models) or with metal casing steel finished in a tough epoxy-polyester paint coating (for 4000 and 6000 models). The unique design of the support bracket allows the motor and impeller assembly to be fitted or removed without dismantling the adjacent ducting.

Motors
Models 160-2000:
Class B, with ball bearings and safety thermal overload protection. IP44.
Direct 2 or 3 speed connection and also suitable for voltage speed control.
Electrical supply:
Single phase 230V-50Hz.
(models from 160 to 350)
Single phase 230V-50/60Hz.
(models from 500 to 2000)

Models 4000 and 6000: Class F, with ball bearings and safety thermal overload protection. IP54.
Suitable for voltage speed control.
Electrical supply:
Single phase 230V-50/60Hz.
Three phase 400V-50/60Hz
(model 4000) or
400V-50Hz (model 6000)

Additional information
Three phase models adjustable by inverter control.

TD-MIXVENT-T models
TD-MIXVENT versions fitted with a run-on-timer adjustable within 1 and 30 minutes and one speed or 3-speed motor (depending on the model) not suitable for speed control.

Constructive configuration models TD-4000 and TD-6000

Constructive configuration models TD-1300 and TD-2000

LOW PROFILE

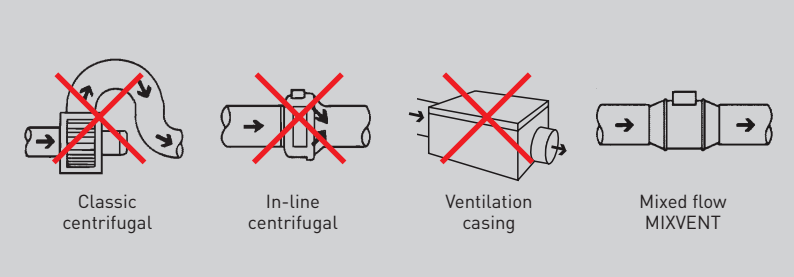

The low profile of the MIXVENT-TD fans makes them the most effective solution for installations where the space of installation is limited such as false ceilings.

EASY TO MOUNT

Fix the support bracket.

Place the impeller and motor assembly.

Carry out the wiring connections.

Connect the ducts.

EASY MAINTENANCE

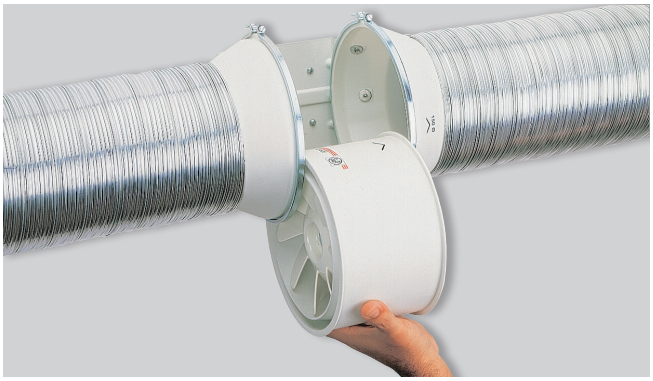

The unique design of the support bracket allows the motor and impeller assembly to be fitted or removed **without dismantling the adjacent ducting**.

FLEXIBLE MOUNTING POSITION

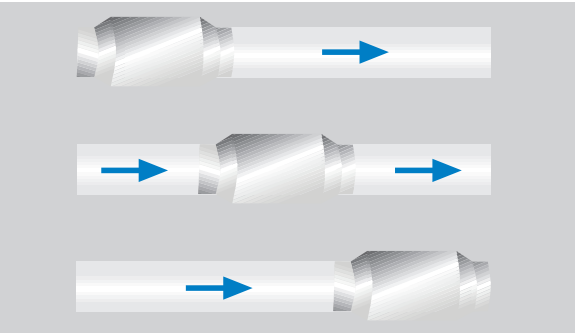

Can be mounted at any place of the air duct.

MODELS TD-MIXVENT-T

Models MIXVENT-TD-T (from 160 to 800 models) are fitted with an adjustable timer between 1 and 30 minutes and are supplied with a one-speed or 3-speed motor (depending on the model) not suitable for speed control.

MODEL 160

Model TD-160/100N SILENT offer very low noise level, with a motor mounted on silent-elastic-blocks which absorb the vibrations.

DESIGN CHARACTERISTICS TD-MIXVENT

Before installation check that the product electrical characteristics listed on the data plate label (voltage, power, frequency, etc.) match those of the intended electrical supply.

TD-MIXVENT	Speed (r.p.m.)	Maximum absorbed power (W)	Maximum absorbed current (A)	Maximum airflow (m^3/h)	Sound pressure level* (dB(A))	Min-Max air Temperature (°C)	Weight (kg)	Duct diameter (mm)	3-speed switch	Speed controller
TD-160/100 N SILENT	2400	29	0,17	180	24	-20/+40	1,4	100	COM-2 REGUL-2	RMB-1,5 REB-1
	2200	18	0,11	150	22					
TD-250/100	2140	28	0,12	250	34	-20/+40	2	100	COM-2 REGUL-2	RMB-1,5 REB-1
	1700	22	0,1	200	28					
TD-350/125	2050	25	0,11	330	33	-20/+40	2	125	COM-2 REGUL-2	RMB-1,5 REB-1
	1590	20	0,09	250	28					
TD-500/150 3V	2590	53	0,21	560	35	-20/+60	2,7	150	COM-3 INTER 4P	RMB-1,5 REB-1
	2150	44	0,19	470	31					
	1820	41	0,18	390	26					
TD-500/160 3V	2590	53	0,21	560	35	-20/+60	2,7	160	COM-3 INTER 4P	RMB-1,5 REB-1
	2150	44	0,19	470	31					
	1820	41	0,18	390	26					
TD-800/200N 3V	2190	103	0,5	890	38	-20/+60	4,9	200	COM-3 INTER 4P	RMB-1,5 REB-1
	1870	93	0,47	750	34					
	1660	88	0,45	660	31					
TD-800/200 3V	2480	132	0,55	1.040	40	-20/+60	4,9	200	COM-3 INTER 4P	RMB-1,5 REB-1
	2290	133	0,56	940	37					
	2080	131	0,55	850	34					
TD-1300/250N 3V	2710	181	0,8	1.400	40	-20/+60	6,2	250	COM-3 INTER 4P	RMB-1,5 REB-1
	2520	153	0,6	1.310	39					
	2290	132	0,5	1.180	37					
TD-2000/315N 3V	2640	273	1,1	1.840	39	-20/+60	8,4	315	COM-3 INTER 4P	RMB-1,5 REB-2,5
	2500	231	0,9	1.730	38					
	2290	200	0,8	1.620	37					
TD-4000/355	1360	407	1,69	3.750	41	-40/+40	19	355	-	RMB-3,5 REB-2,5
TD-6000/400	1400	580	2,42	5.100	43	-40/+40	26	400	-	RMB-3,5 REB-5
TRIPHASICS										
TD-4000/355 TRIF	1150	309	0,66	3.160	41	-40/+70	19	355	-	RMT-1,5 VFTM TRI 0,37
TD-6000/400 TRIF	1400	691	1,49	5.330	44	-40/+60	26	400	-	RMT-2,5 VFTM TRI 0,55

* Sound pressure level radiated at 3 m at free air conditions with rigid ducts at the inlet and at the outlet.

CONSTRUCTIVE CHARACTERISTICS TD-MIXVENT

	160	250	350	500	800	800N	1300N	2000N	4000	6000
Polypropylene casing	•	•	•	•	•	•	•	•		
Steel casing									•	•
ABS impeller	•	•	•	•	•	•	•	•		
Aluminium impeller									•	•(1)
Protection class	II	II	II	II	II	II	II	II	I	I
Thermal protection by fuse	•	•	•							
Manual resetting thermal protector (PTC)				•	•	•	•	•	•	•
Ball bearings greased for life	•	•	•	•	•	•	•	•	•	•
1 Speed controllable motor									•	•
2 Speed controllable (2) motor	•	•	•							
3 Speed controllable (2) MOTOR				•	•	•	•	•		

(1) Model from one piece die cast aluminium impeller.
(2) Models with Run-On-Timer fitted (TD-MIXVENT-T) are not controllable.

DESIGN CHARACTERISTICS TD-MIXVENT-T

Before installation check that the product electrical characteristics listed on the data plate label (voltage, power, frequency, etc.) match those of the intended electrical supply.

TD-MIXVENT-T (models TD-MIXVENT withrun-on timer)	Speed (r.p.m.)	Maximum absorbed power (W)	Maximum absorbed current (A)	Maximum airflow (m^3/h)	Sound pressure level* (dB(A))	Min-Max air Temperature (°C)	Weight (kg)	Duct diameter (mm)	3-speed switch
TD-160/100 NT SILENT	2400	29	0,17	180	24	-20/+40	1,4	100	-
TD-250/100 T	2140	28	0,12	250	34	-20/+40	2	100	-
TD-350/125 T	2050	26	0,11	330	33	-20/+40	2	125	-
TD-500/150 T 3V	2590	53	0,21	560	35	-20/+60	2,7	150	INTER 4P
	2150	44	0,19	470	31				
	1820	41	0,18	390	26				
TD-500/160 T 3V	2590	53	0,21	560	35	-20/+60	2,7	150	INTER 4P
	2150	44	0,19	470	31				
	1820	41	0,18	390	26				
TD-800/200 T 3V	2480	132	0,55	1.040	40	-20/+60	4,9	200	INTER 4P
	2290	133	0,56	940	37				
	2080	131	0,55	850	34				

* Sound pressure level radiated at 3 m at free air conditions with rigid ducts at the inlet and at the outlet.

CONSTRUCTIVE CHARACTERISTICS TD-MIXVENT-T

	160	250	350	500	800
Polypropylene casing	•	•	•	•	•
ABS impeller	•	•	•	•	•
Protection class	II	II	II	II	II
Manual resetting thermal protector (PTC)	•	•	•	•	•
Ball bearings greased for life	•	•	•	•	•

DIMENSIONS (mm)

TD-160/100 N SILENT

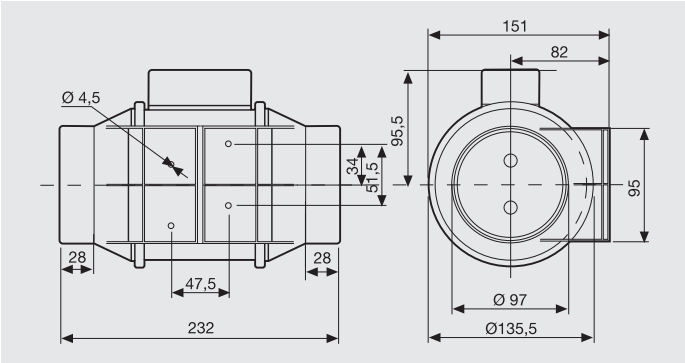

TD-250 to TD-800

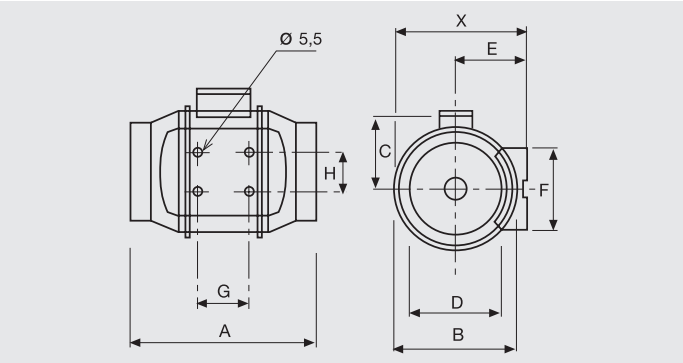

TD-1300 / TD-2000

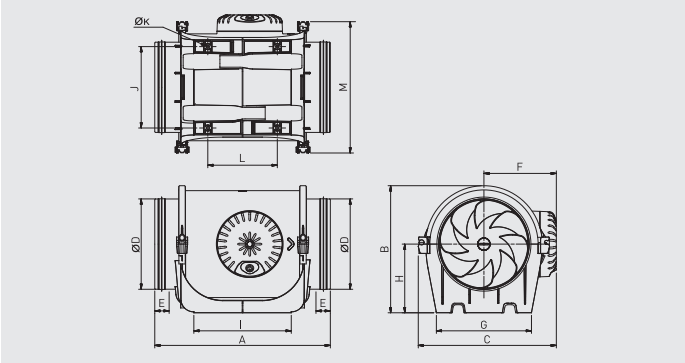

TD-4000 / TD-6000

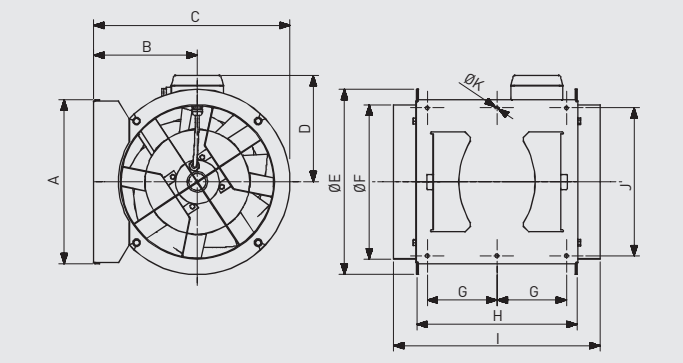

Model	X	A	Ø B	C	Ø D	E	F	G	H
TD-250/100	188	303	176	115	97	100	90	80	60
TD-350/125	188	258	176	115	123	100	90	80	60
TD-500/150	212	295	200	127	147	112	130	80	60
TD-500/160	212	295	200	127	157	112	130	80	60
TD-800/200N	232,5	302	217	141	198	124	140	100	94
TD-800/200	232,5	302	217	141	198	124	140	100	94

Model	A	B	C	ØD	E	F	G	H	I	J	ØK	L	M
TD-1300/250N	390	289	306	247	40	159	230	155	231	194	7	182	295
TD-2000/315N	485	353	371	312	40	192	278	188	317	242	7	206	358

Model	A	B	C	D	Ø E	Ø F	G	H	I	J	Ø K
TD-4000/355	377	238	451	224	426	354	150	368	474	340	8.5
TD-6000/400	407	249	249	267	487	399	160	425	547	370	8.5

PERFORMANCE CURVES

- q_v: Airflow in m³/h.
- p_{sf}: Static pressure in Pa.
- Dry air at 20ºC and 760 mmHg.
- Performance data in accordance with ISO 5801 and AMCA 210-99 Standards.
- SFP: Specific fan power in W/m3/s (blue curves).

HS : High speed
MS: Medium speed
LS: Low speed

TD-160/100N SILENT

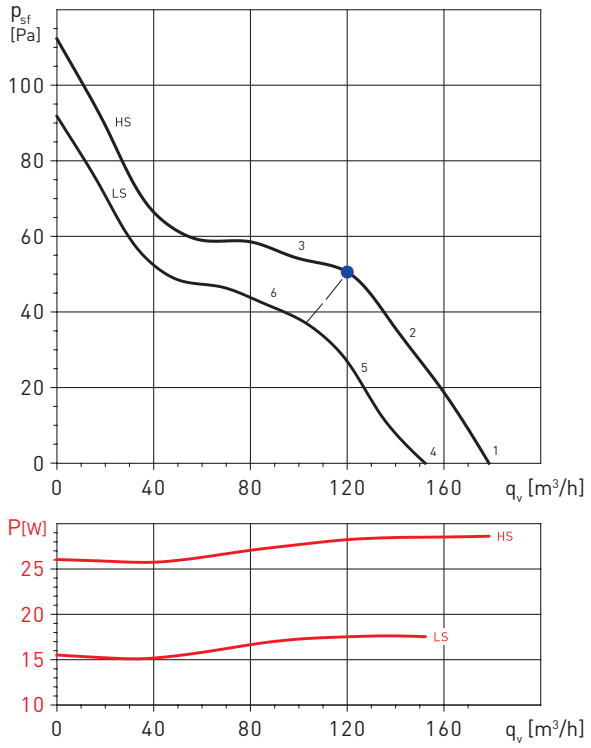

TD-250/100

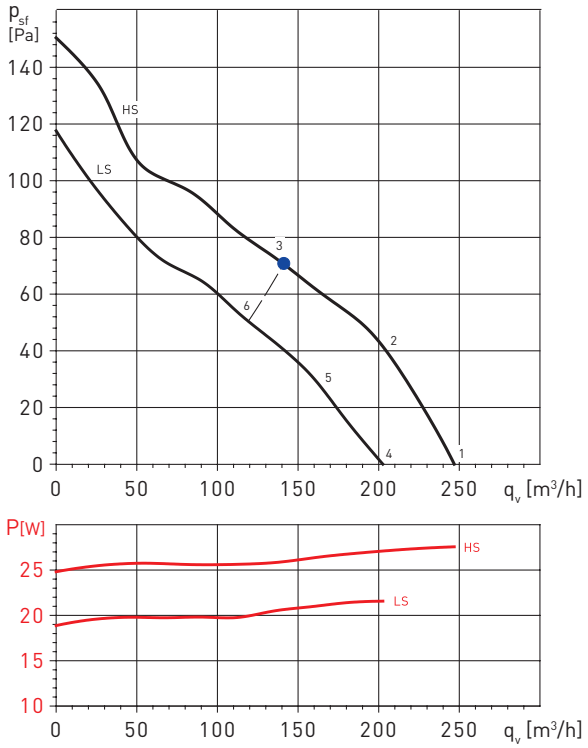

Sound power level spectrums in dB(A)

Working point		63	125	250	500	1.000	2.000	4.000	8.000	LwA
1	Inlet	22	34	41	47	53	49	40	31	56
	Outlet	22	43	38	50	51	47	41	32	55
	Break-Out	21	27	41	35	36	40	33	22	45
2	Inlet	21	36	39	47	52	48	39	30	55
	Outlet	22	42	37	50	50	46	41	31	54
	Break-Out	20	29	39	35	35	39	32	21	44
3	Inlet	24	37	41	48	52	47	39	30	55
	Outlet	27	42	38	50	51	45	40	31	55
	Break-Out	23	30	41	36	35	38	32	21	45
4	Inlet	22	31	37	45	51	46	38	29	53
	Outlet	22	38	34	48	49	45	39	29	53
	Break-Out	19	27	36	33	35	38	31	21	42
5	Inlet	21	33	37	45	50	46	37	28	53
	Outlet	22	38	35	48	48	44	38	29	52
	Break-Out	18	29	36	33	34	38	30	20	42
6	Inlet	23	34	39	45	50	45	37	28	53
	Outlet	26	38	36	48	49	44	38	28	53
	Break-Out	20	30	38	33	34	37	30	20	43

Sound power level spectrums in dB(A)

Working point		63	125	250	500	1.000	2.000	4.000	8.000	LwA
1	Inlet	28	32	51	54	54	48	38	28	58
	Outlet	20	28	51	53	53	49	39	29	58
	Break-Out	18	21	50	44	48	46	31	20	54
2	Inlet	24	31	50	51	54	48	39	30	57
	Outlet	21	28	51	52	51	49	38	29	57
	Break-Out	16	21	51	44	48	45	32	22	54
3	Inlet	26	32	47	53	54	51	42	32	58
	Outlet	26	33	49	55	52	50	40	30	58
	Break-Out	17	22	47	45	49	47	34	23	53
4	Inlet	23	27	46	48	49	43	33	23	53
	Outlet	15	23	45	48	48	44	33	24	53
	Break-Out	13	16	45	39	43	41	26	15	48
5	Inlet	19	26	46	47	49	44	35	26	53
	Outlet	17	24	46	47	47	44	33	24	52
	Break-Out	11	16	46	39	44	41	27	17	49
6	Inlet	22	29	44	49	51	47	38	29	55
	Outlet	23	29	46	51	49	47	37	27	55
	Break-Out	14	19	44	41	45	44	31	20	50

PERFORMANCE CURVES

- q_v: Airflow in m³/h.
- p_{sf}: Static pressure in Pa.
- Dry air at 20ºC and 760 mmHg.
- Performance data in accordance with ISO 5801 and AMCA 210-99 Standards.
- SFP: Specific fan power in W/m3/s (blue curves).

HS : High speed
MS: Medium speed
LS: Low speed

TD-350/125

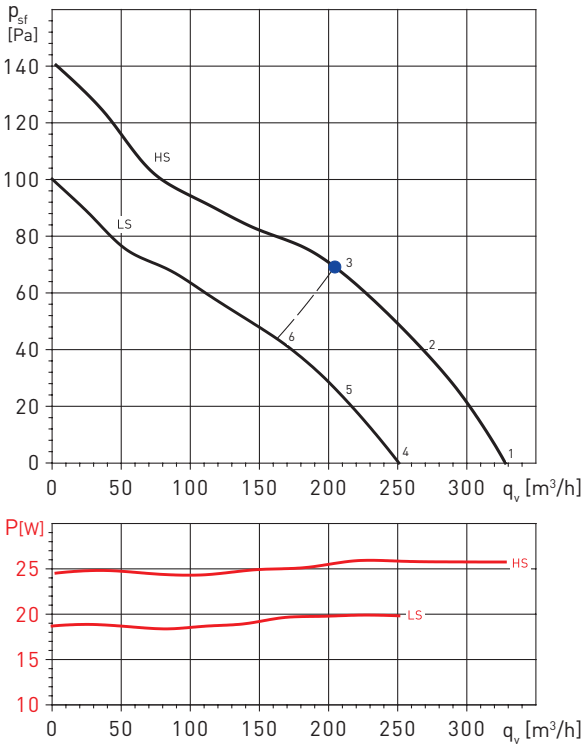

TD-500/150 3V

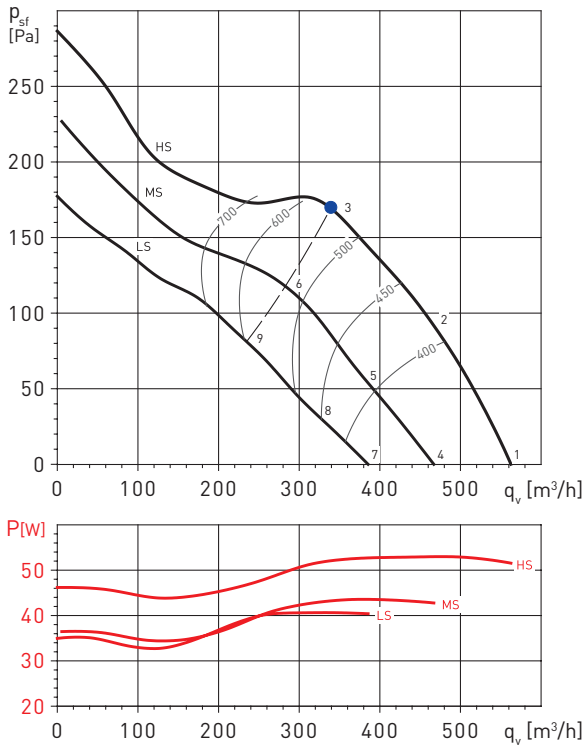

Sound power level spectrums in dB(A)

Working point		63	125	250	500	1.000	2.000	4.000	8.000	LwA
1	Inlet	28	34	51	55	56	51	42	32	60
	Outlet	25	31	50	54	55	52	43	33	59
	Break-Out	19	24	49	45	49	47	34	23	54
2	Inlet	24	33	50	53	55	52	43	34	59
	Outlet	26	31	51	54	55	52	43	34	59
	Break-Out	16	24	48	43	48	46	34	23	53
3	Inlet	26	34	48	54	56	53	45	36	60
	Outlet	27	33	49	56	54	52	43	34	60
	Break-Out	18	26	46	45	49	48	36	25	54
4	Inlet	22	29	46	49	50	46	36	27	54
	Outlet	19	26	45	49	50	47	37	28	54
	Break-Out	13	19	43	39	44	42	29	17	48
5	Inlet	19	27	45	47	50	46	38	29	54
	Outlet	20	26	46	49	50	47	38	29	54
	Break-Out	11	19	43	38	43	41	28	18	48
6	Inlet	21	29	43	50	51	49	41	32	55
	Outlet	22	29	45	51	50	48	39	29	55
	Break-Out	13	21	42	40	45	44	31	21	49

Sound power level spectrums in dB(A)

Working point		63	125	250	500	1.000	2.000	4.000	8.000	LwA
1	Inlet	28	38	52	58	60	58	51	41	64
	Outlet	34	37	51	57	61	59	52	42	64
	Break-Out	19	31	46	45	50	51	39	27	55
2	Inlet	25	36	50	55	59	58	51	42	63
	Outlet	33	36	51	57	61	59	51	43	64
	Break-Out	17	30	45	43	49	49	37	26	54
3	Inlet	26	37	50	56	59	59	52	43	64
	Outlet	29	35	50	58	59	57	50	41	64
	Break-Out	18	31	44	44	49	50	38	27	54
4	Inlet	24	34	48	54	56	54	47	37	60
	Outlet	30	33	47	53	57	55	48	38	60
	Break-Out	15	27	42	41	46	47	35	23	51
5	Inlet	20	32	46	51	54	54	47	38	59
	Outlet	29	32	47	53	56	55	47	38	60
	Break-Out	13	26	41	39	45	45	33	22	49
6	Inlet	22	33	46	53	55	55	49	40	60
	Outlet	25	31	46	54	56	54	47	38	60
	Break-Out	15	27	41	40	45	46	35	24	50
7	Inlet	19	30	44	50	51	50	42	33	56
	Outlet	25	29	42	48	52	50	43	34	56
	Break-Out	11	23	38	37	42	42	30	19	46
8	Inlet	16	28	42	46	50	50	42	33	54
	Outlet	24	28	43	48	52	50	43	34	56
	Break-Out	9	22	37	34	40	41	29	18	45
9	Inlet	18	29	42	49	51	51	44	36	56
	Outlet	21	27	42	50	52	50	42	34	56
	Break-Out	11	23	37	36	41	42	31	20	46

PERFORMANCE CURVES

- q_v: Airflow in m³/h.
- p_{sf}: Static pressure in Pa.
- Dry air at 20ºC and 760 mmHg.
- Performance data in accordance with ISO 5801 and AMCA 210-99 Standards.
- SFP: Specific fan power in W/m3/s (blue curves).

HS : High speed
MS: Medium speed
LS: Low speed

TD-800/200N 3V

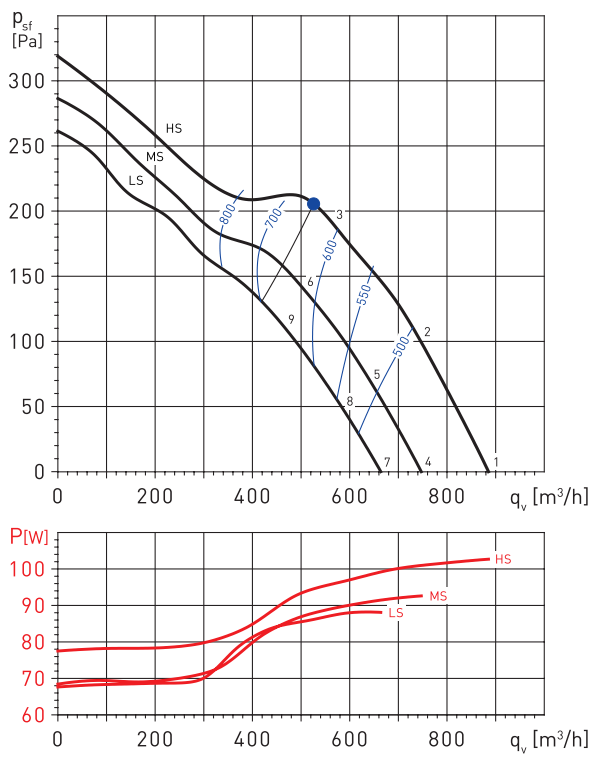

TD-800/200 3V

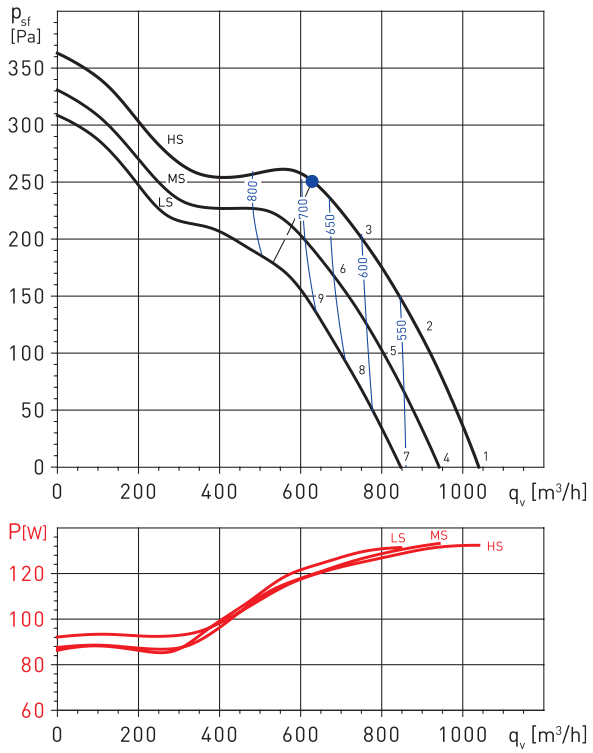

Sound power level spectrums in dB(A)

Working point		63	125	250	500	1.000	2.000	4.000	8.000	LwA
1	Inlet	28	41	52	61	63	64	58	49	68
	Outlet	43	44	52	60	66	65	60	50	70
	Break-Out	19	36	44	45	51	53	43	30	56
2	Inlet	25	39	50	57	61	64	57	48	67
	Outlet	39	41	51	59	65	64	58	50	69
	Break-Out	18	35	42	42	49	51	40	28	54
3	Inlet	26	39	51	58	61	63	58	49	67
	Outlet	31	37	51	60	64	62	57	48	68
	Break-Out	19	35	43	43	49	51	41	29	54
4	Inlet	24	37	48	56	59	60	54	45	64
	Outlet	38	40	48	56	62	61	56	46	66
	Break-Out	15	32	40	41	47	49	39	26	52
5	Inlet	21	36	46	53	57	60	54	45	63
	Outlet	36	37	48	56	62	61	55	46	65
	Break-Out	14	32	38	39	45	48	37	25	51
6	Inlet	22	36	48	55	58	60	55	46	64
	Outlet	28	34	48	57	61	59	54	45	65
	Break-Out	16	32	40	40	46	48	38	26	51
7	Inlet	21	35	46	54	56	58	52	42	62
	Outlet	36	37	45	53	59	59	54	44	63
	Break-Out	12	29	37	38	44	46	36	24	49
8	Inlet	19	33	44	51	55	58	51	42	61
	Outlet	33	35	45	53	59	58	53	44	63
	Break-Out	12	29	36	36	43	45	34	22	48
9	Inlet	20	33	45	52	56	57	52	44	61
	Outlet	25	31	45	54	59	57	51	43	62
	Break-Out	13	30	37	38	44	45	35	24	49

Sound power level spectrums in dB(A)

Working point		63	125	250	500	1.000	2.000	4.000	8.000	LwA
1	Inlet	27	42	52	61	64	66	60	51	69
	Outlet	46	46	53	61	68	68	63	53	72
	Break-Out	20	38	43	46	52	54	44	32	57
2	Inlet	24	40	49	57	62	65	59	50	68
	Outlet	41	42	51	60	66	65	60	52	70
	Break-Out	19	38	42	43	49	52	42	30	55
3	Inlet	25	40	51	58	62	64	60	51	68
	Outlet	32	38	52	61	67	65	60	51	70
	Break-Out	19	37	42	43	49	51	41	30	54
4	Inlet	24	39	49	58	61	63	58	48	67
	Outlet	43	43	50	58	65	65	61	51	69
	Break-Out	17	36	41	43	49	51	42	29	54
5	Inlet	22	37	47	55	59	63	56	48	65
	Outlet	38	39	48	57	64	63	58	49	67
	Break-Out	16	35	39	40	47	50	39	27	52
6	Inlet	23	38	49	56	60	62	58	49	66
	Outlet	30	36	50	59	65	63	58	49	68
	Break-Out	17	35	40	41	47	49	39	28	52
7	Inlet	22	37	47	56	58	61	55	46	64
	Outlet	41	41	47	56	63	63	58	48	67
	Break-Out	15	33	38	40	47	49	39	27	52
8	Inlet	19	35	44	52	56	60	54	45	63
	Outlet	35	36	45	54	61	60	55	47	65
	Break-Out	14	33	36	38	44	47	37	25	50
9	Inlet	21	36	47	54	58	61	56	47	64
	Outlet	28	34	48	57	63	61	56	47	66
	Break-Out	15	33	38	39	45	47	37	26	50

PERFORMANCE CURVES

- q_v: Airflow in m^3/h.
- p_{sf}: Static pressure in Pa.
- Dry air at 20ºC and 760 mmHg.
- Performance data in accordance with ISO 5801 and AMCA 210-99 Standards.
- SFP: Specific fan power in W/m3/s (blue curves).

HS : High speed
MS: Medium speed
LS: Low speed

TD-1300/250N

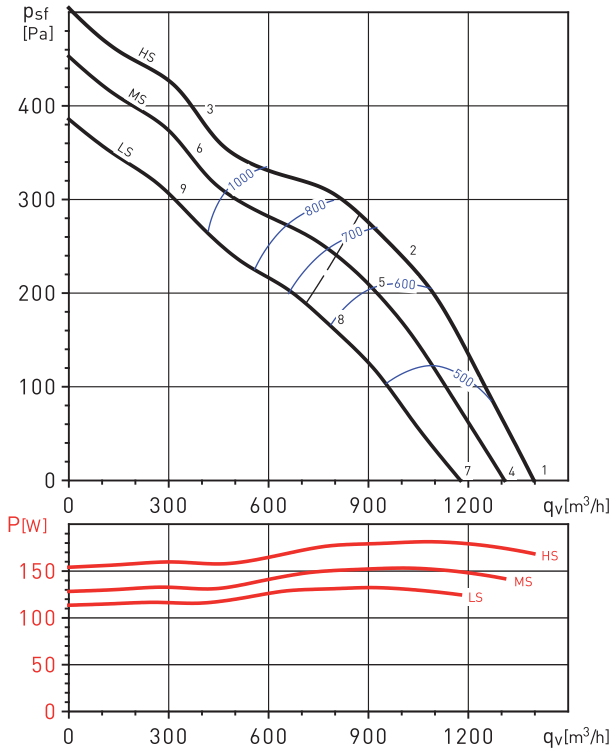

TD-2000/315N

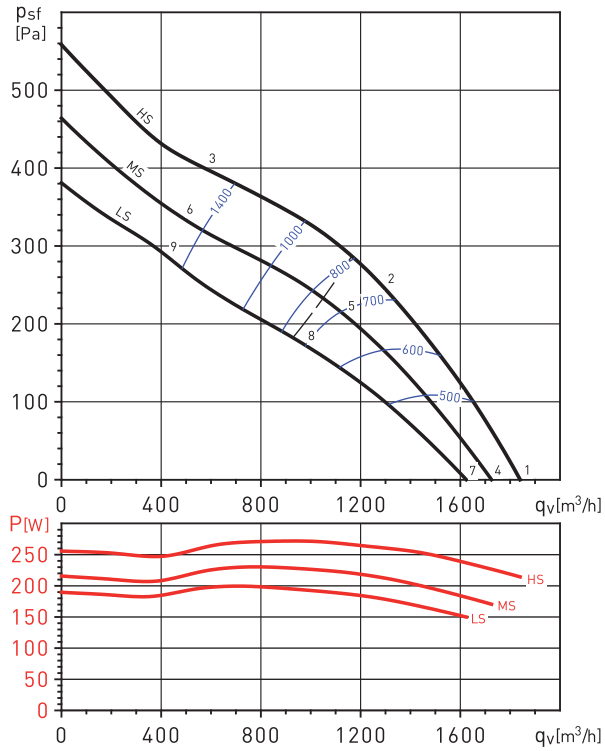

Sound power level spectrums in dB(A)

Working point		63	125	250	500	1000	2000	4000	8000	LwA
1	Inlet	37	47	57	65	71	72	67	59	76
	Outlet	36	49	62	66	72	73	68	59	77
	Break-Out	32	39	41	47	57	57	42	34	60
2	Inlet	32	45	56	63	69	68	61	55	73
	Outlet	35	46	59	65	70	69	61	52	73
	Break-Out	27	38	41	45	55	53	37	29	58
3	Inlet	39	57	65	67	69	67	62	56	74
	Outlet	41	59	67	67	68	66	60	54	74
	Break-Out	34	50	49	49	55	52	38	30	59
4	Inlet	36	45	56	64	70	70	65	58	74
	Outlet	34	47	60	64	71	72	67	58	76
	Break-Out	30	38	40	46	56	55	41	32	59
5	Inlet	30	44	55	61	67	66	59	53	71
	Outlet	33	44	57	63	68	67	60	50	72
	Break-Out	25	36	39	43	53	52	35	27	56
6	Inlet	38	56	63	66	67	66	60	55	72
	Outlet	40	58	66	65	67	65	59	53	72
	Break-Out	33	49	48	47	53	51	36	29	57
7	Inlet	34	43	53	62	67	68	63	56	72
	Outlet	32	45	58	62	69	70	65	56	73
	Break-Out	28	36	38	44	53	53	39	30	57
8	Inlet	28	41	52	58	64	64	57	50	68
	Outlet	30	42	55	60	65	65	57	48	69
	Break-Out	22	34	36	40	50	49	33	25	53
9	Inlet	36	54	62	64	66	64	59	53	70
	Outlet	38	56	64	63	65	63	57	51	71
	Break-Out	31	47	46	46	52	49	35	27	56

Sound power level spectrums in dB(A)

Working point		63	125	250	500	1000	2000	4000	8000	LwA
1	Inlet	34	57	63	68	72	68	68	55	76
	Outlet	34	55	60	71	74	69	68	56	77
	Break-Out	20	42	41	50	56	52	45	31	59
2	Inlet	33	64	66	70	72	70	65	57	77
	Outlet	35	52	64	67	72	69	62	55	75
	Break-Out	20	49	45	52	56	54	42	32	60
3	Inlet	46	62	72	72	73	71	64	57	78
	Outlet	51	65	69	70	71	71	62	55	77
	Break-Out	20	47	50	55	57	55	42	32	61
4	Inlet	33	56	62	67	71	67	67	54	75
	Outlet	34	54	60	70	74	69	68	56	77
	Break-Out	20	41	41	50	56	51	44	30	58
5	Inlet	32	62	65	69	71	69	63	55	75
	Outlet	33	50	62	65	70	68	60	53	74
	Break-Out	20	48	43	51	55	53	41	31	59
6	Inlet	45	61	70	71	71	69	63	55	77
	Outlet	50	64	68	68	70	69	61	54	75
	Break-Out	20	46	49	53	56	53	41	31	60
7	Inlet	32	55	61	66	70	66	66	53	74
	Outlet	32	53	59	69	72	67	67	55	76
	Break-Out	20	40	40	49	54	50	43	29	57
8	Inlet	29	60	62	67	68	67	61	53	73
	Outlet	31	48	60	63	68	66	58	51	71
	Break-Out	20	45	41	49	53	51	39	29	56
9	Inlet	42	59	68	69	69	67	61	53	75
	Outlet	48	61	66	66	68	67	59	52	73
	Break-Out	20	44	47	51	54	51	38	29	58

PERFORMANCE CURVES

- q_v: Airflow in m^3/h.
- p_{sf}: Static pressure in Pa.
- Dry air at 20ºC and 760 mmHg.
- Performance data in accordance with ISO 5801 and AMCA 210-99 Standards.
- SFP: Specific fan power in W/m3/s (blue curves).

TD-4000/355

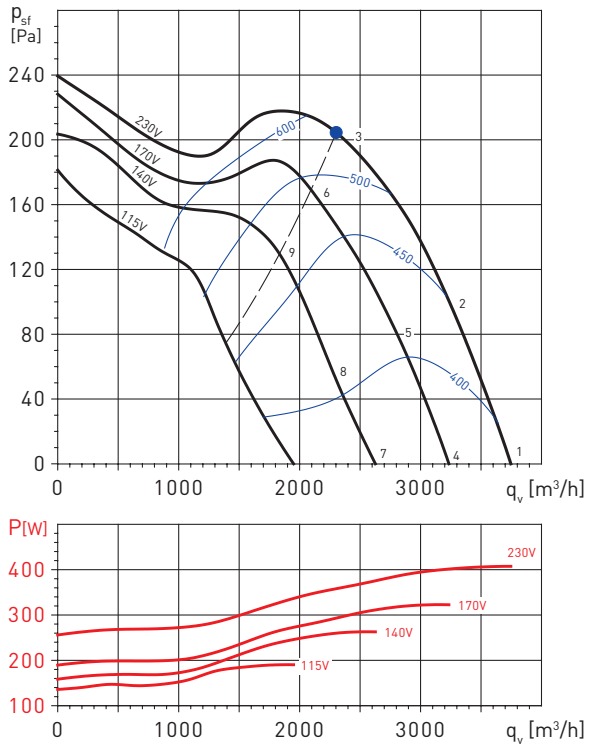

TD-4000/355 TRI

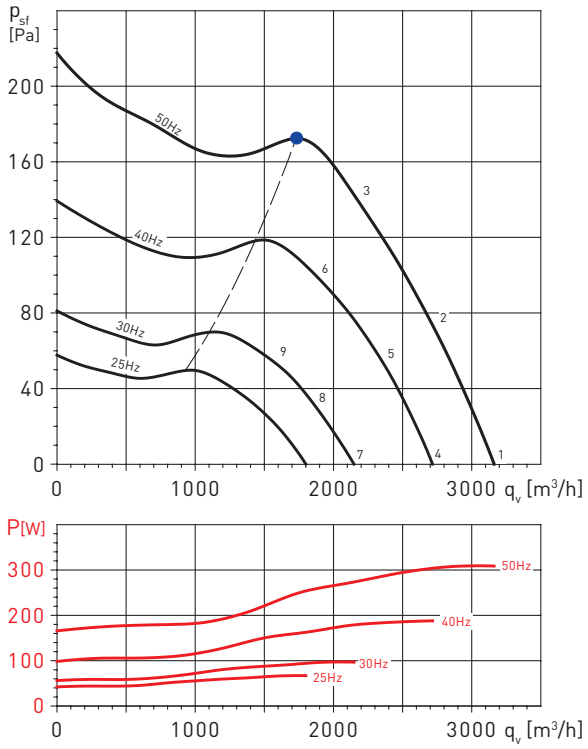

Sound power level spectrums in dB(A)

Working point		63	125	250	500	1.000	2.000	4.000	8.000	LwA
1	Inlet	34	61	62	68	73	72	67	57	77
	Outlet	64	66	65	70	74	72	65	57	78
	Break-Out	27	55	51	49	58	52	47	39	61
2	Inlet	33	59	60	66	71	70	64	55	75
	Outlet	58	61	63	69	72	70	63	53	76
	Break-Out	23	51	49	47	56	50	45	36	59
3	Inlet	48	67	68	71	69	68	62	54	76
	Outlet	47	63	66	69	70	68	61	52	75
	Break-Out	28	56	51	46	54	47	41	34	59
4	Inlet	32	58	59	65	70	70	64	55	74
	Outlet	61	63	63	68	71	69	63	55	75
	Break-Out	24	53	48	46	56	49	45	36	59
5	Inlet	30	56	58	64	68	68	62	53	73
	Outlet	55	59	61	67	70	67	61	51	74
	Break-Out	21	49	47	45	54	47	42	34	57
6	Inlet	47	66	67	70	69	67	61	53	75
	Outlet	46	62	65	68	70	67	61	52	74
	Break-Out	27	56	50	45	53	46	41	33	59
7	Inlet	27	53	54	60	65	65	59	50	69
	Outlet	56	58	58	63	66	64	58	50	71
	Break-Out	19	48	43	41	51	44	40	31	54
8	Inlet	26	51	53	59	64	63	57	48	68
	Outlet	51	54	56	62	65	63	56	46	69
	Break-Out	16	44	42	40	49	42	38	29	52
9	Inlet	43	62	63	66	65	63	57	49	71
	Outlet	42	58	61	64	65	63	56	47	70
	Break-Out	23	51	46	41	49	42	37	29	55

Sound power level spectrums in dB(A)

Working point		63	125	250	500	1.000	2.000	4.000	8.000	LwA
1	Inlet	31	60	59	65	70	69	64	53	74
	Outlet	60	62	62	67	71	69	62	53	75
	Break-Out	27	59	50	47	56	49	46	36	62
2	Inlet	30	58	57	63	68	67	62	52	72
	Outlet	53	58	59	65	68	66	59	49	72
	Break-Out	23	54	47	45	53	47	43	33	58
3	Inlet	46	65	67	70	67	64	60	50	74
	Outlet	41	61	63	66	67	65	58	49	72
	Break-Out	26	58	51	45	52	44	41	32	60
4	Inlet	27	55	54	60	65	64	59	48	69
	Outlet	55	57	57	62	66	64	57	49	70
	Break-Out	22	54	45	42	51	44	41	31	57
5	Inlet	25	53	52	58	63	62	57	47	67
	Outlet	49	53	54	60	63	61	55	44	67
	Break-Out	18	49	42	40	48	42	38	29	53
6	Inlet	41	60	62	65	62	59	55	45	69
	Outlet	37	56	58	61	62	60	54	45	67
	Break-Out	21	53	46	40	47	39	36	27	55
7	Inlet	20	49	48	53	59	58	53	42	63
	Outlet	49	51	50	56	60	58	51	42	64
	Break-Out	16	48	39	36	45	38	35	25	51
8	Inlet	19	47	46	52	57	56	51	41	61
	Outlet	42	47	48	54	57	55	48	38	61
	Break-Out	12	42	36	34	42	35	32	22	46
9	Inlet	35	54	56	59	56	53	49	39	63
	Outlet	30	50	52	55	56	54	47	38	61
	Break-Out	15	47	40	34	41	33	30	21	49

PERFORMANCE CURVES

- q_v: Airflow in m³/h.
- p_{sf}: Static pressure in Pa.
- Dry air at 20ºC and 760 mmHg.
- Performance data in accordance with ISO 5801 and AMCA 210-99 Standards.
- SFP: Specific fan power in W/m3/s (blue curves).

TD-6000/400

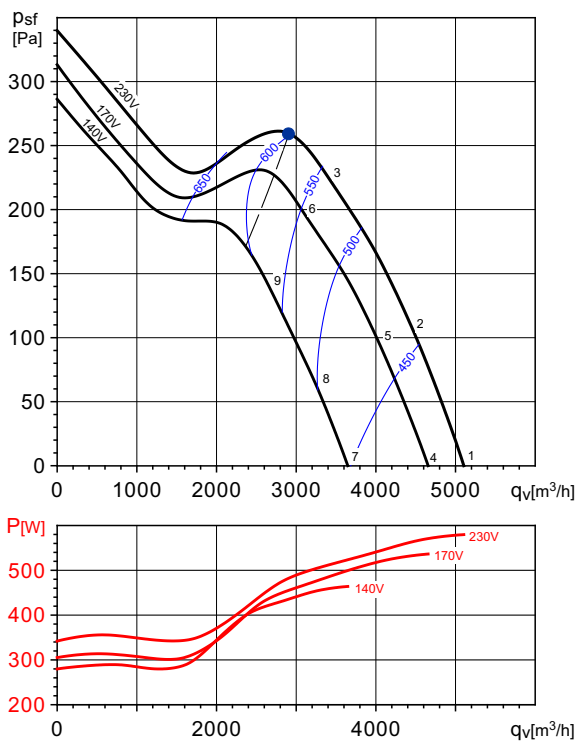

TD-6000/400 TRI

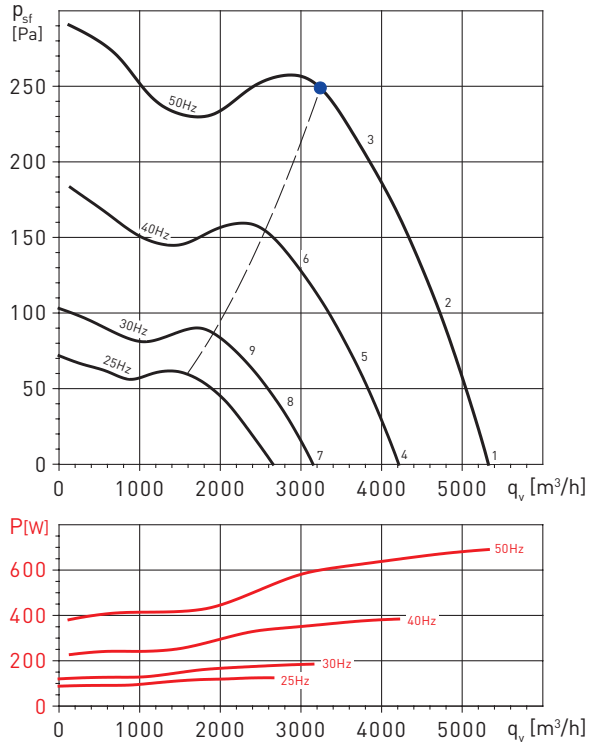

Sound power level spectrums in dB(A)

Working point		63	125	250	500	1.000	2.000	4.000	8.000	LwA
1	Inlet	42	63	68	75	79	79	72	63	83
	Outlet	72	74	73	77	80	78	72	65	85
	Break-Out	25	46	51	54	62	56	49	40	64
2	Inlet	41	63	68	75	78	77	70	60	82
	Outlet	64	66	70	77	79	77	69	60	83
	Break-Out	24	46	51	54	61	54	47	37	63
3	Inlet	52	69	67	70	74	72	65	55	78
	Outlet	50	67	69	72	73	71	64	54	78
	Break-Out	35	52	50	49	57	49	42	32	60
4	Inlet	40	61	66	73	77	77	70	61	82
	Outlet	70	72	71	75	78	76	70	63	83
	Break-Out	23	44	49	52	60	54	47	38	62
5	Inlet	39	61	66	73	76	75	68	58	81
	Outlet	62	64	68	75	77	75	67	58	82
	Break-Out	22	44	49	52	59	52	45	35	61
6	Inlet	51	68	66	69	73	71	64	54	77
	Outlet	49	66	68	71	72	70	63	53	77
	Break-Out	34	51	49	48	56	48	41	31	58
7	Inlet	35	56	61	68	72	72	65	56	77
	Outlet	65	67	66	70	73	71	65	58	78
	Break-Out	18	39	44	47	55	49	42	33	57
8	Inlet	35	57	62	69	72	71	64	54	76
	Outlet	58	60	64	71	73	71	63	54	77
	Break-Out	18	40	45	48	55	48	41	31	57
9	Inlet	47	64	62	65	69	67	60	50	73
	Outlet	45	62	64	67	68	66	59	49	73
	Break-Out	30	47	45	44	52	44	37	27	55

Sound power level spectrums in dB(A)

Working point		63	125	250	500	1.000	2.000	4.000	8.000	LwA
1	Inlet	41	62	68	75	80	80	72	66	84
	Outlet	72	75	74	77	80	79	72	66	85
	Break-Out	26	47	52	53	63	56	49	43	65
2	Inlet	40	62	68	75	79	78	71	64	83
	Outlet	65	67	71	76	79	77	69	61	83
	Break-Out	24	46	53	52	62	55	48	41	64
3	Inlet	51	69	68	72	74	75	65	60	79
	Outlet	56	66	70	74	75	73	66	57	80
	Break-Out	33	53	52	48	57	52	42	38	61
4	Inlet	37	57	63	70	75	75	68	61	79
	Outlet	67	70	69	72	75	74	67	61	80
	Break-Out	21	42	48	48	58	51	45	38	60
5	Inlet	35	57	64	70	74	74	66	59	78
	Outlet	61	62	66	72	74	72	64	56	78
	Break-Out	19	41	48	47	57	50	43	36	59
6	Inlet	46	64	63	67	69	70	60	55	74
	Outlet	51	61	65	69	71	68	61	52	75
	Break-Out	28	49	47	43	52	47	37	33	56
7	Inlet	30	51	56	64	69	69	61	55	73
	Outlet	61	63	63	66	69	67	61	55	74
	Break-Out	15	36	41	42	52	45	38	32	54
8	Inlet	29	51	57	64	68	67	60	53	72
	Outlet	54	56	60	65	68	65	58	50	72
	Break-Out	13	35	42	41	51	44	37	30	52
9	Inlet	40	58	57	60	63	64	54	49	68
	Outlet	45	55	59	63	64	62	55	46	69
	Break-Out	22	42	41	37	46	41	31	27	49

KITS TD-MIXVENT
The TD ventilation kits enable the simple and fast installation of a complete ventilation system. The kits provide efficient extraction for bathrooms, toilets, washrooms and any other applications that require the removal of bad odours, stuffy and humid air.

KIT TD-160/100 N SILENT includes:
1 TD-160/100 N SILENT fan
+ 4 m of flexible aluminium ducting GSA
+ 1 interior circular air valve BOR-100
+ 1 exterior mounted grille GR-100
+ 1 adhesive duct tape BA

KIT TD-250/100 includes:
1 TD-250/100 fan
+ 4 m of flexible aluminium ducting GSA
+ 1 interior circular air valve BOR-100
+ 1 exterior mounted grille GR-100
+ 1 adhesive duct tape BA

KIT TD-160/100 NT SILENT includes:
1 TD-160/100 NT SILENT fan
+ 4 m of flexible aluminium ducting GSA
+ 1 interior circular air valve BOR-100
+ 1 exterior mounted grille GR-100
+ 1 adhesive duct tape BA

KIT TD-250/100T includes:
1 TD-250/100 T fan
+ 4 m of flexible aluminium ducting GSA
+ 1 interior circular air valve BOR-100
+ 1 exterior mounted grille GR-100
+ 1 adhesive duct tape BA

The TD-T extractors are fitted with an adjustable Run-On-Timer between 1 and 30 minutes, keeping the fan in operation for the selected period of time after being switched off.

INSTALLATION AND MOUNTING

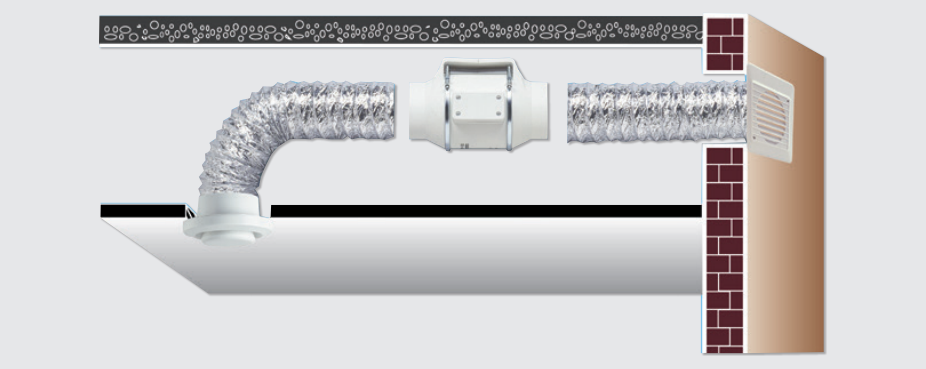

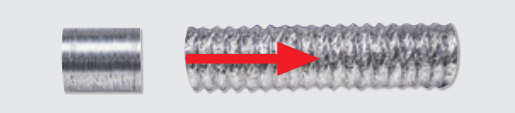

ACCESSORIES INCLUDED IN KIT

GSA-M0 100
100 mm diameter of flexible aluminium ducting.

GR-100
Exterior mounted grille.

BOR-100
Interior circular air valve.

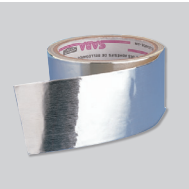

BA-50
Adhesive aluminium duct tape (10 m).