Grid View
Irradiance
Adjust 3D View

www.jinkosolar.com

Building **Your Trust** in Solar

Tiger Neo N-type 54HL4-B

400-420 Watt

ALL-BLACK MODULE

N-Type

Positive power tolerance of 0~+3%

IEC61215(2016), IEC61730(2016)

ISO9001:2015: Quality Management System

ISO14001:2015: Environment Management System

ISO45001:2018
Occupational health and safety management systems

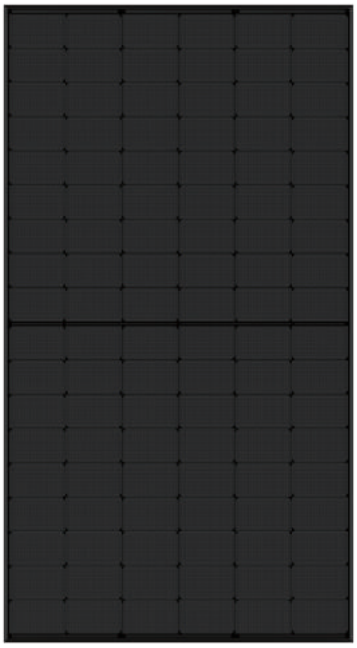

Key Features

SMBB Technology

Better light trapping and current collection to improve module power output and reliability.

Hot 2.0 Technology

The N-type module with Hot 2.0 technology has better reliability and lower LID/LETID.

PID Resistance

Excellent Anti-PID performance guarantee via optimized mass-production process and materials control.

Enhanced Mechanical Load

Certified to withstand: wind load (2400 Pascal) and snow load (5400 Pascal).

Durability Against Extreme Environmental Conditions

High salt mist and ammonia resistance.

LINEAR PERFORMANCE WARRANTY

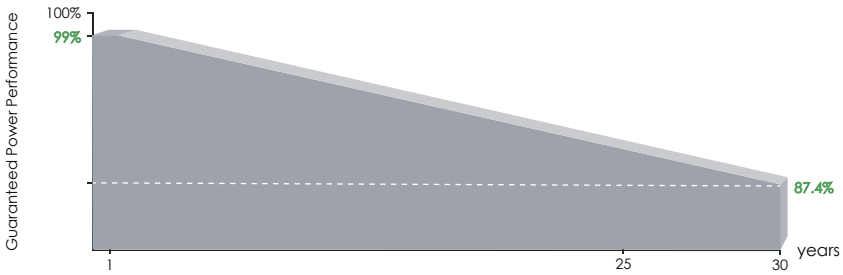

25 Year Product Warranty

30 Year Linear Power Warranty

0.40% Annual Degradation Over 30 years

Engineering Drawings

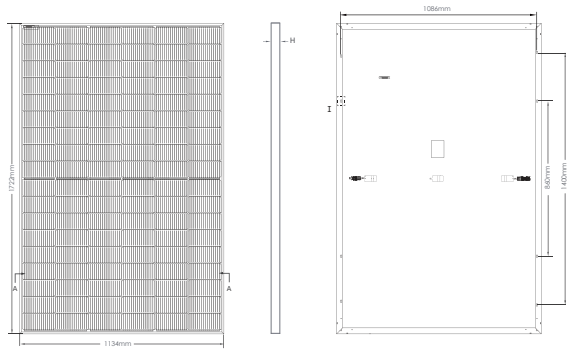

Front Side Back

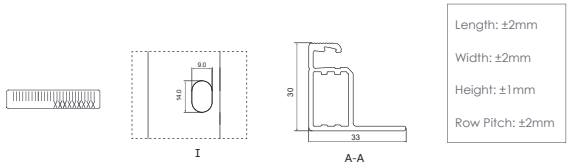

Packaging Configuration

(Two pallets = One stack)

36pcs/pallets, 72pcs/stack, 936pcs/ 40'HQ Container

Electrical Performance & Temperature Dependence

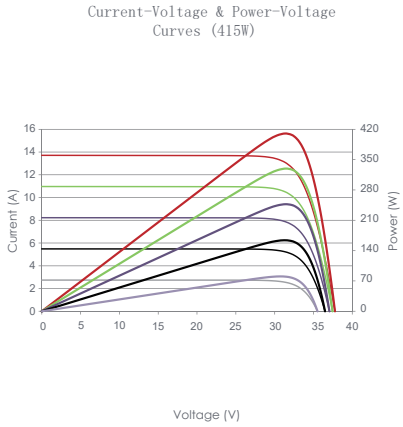

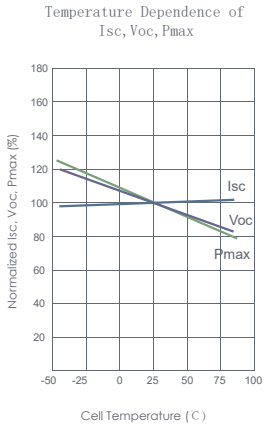

Mechanical Characteristics

Cell Type	N type Mono-crystalline
No. of cells	108 (6×18)
Dimensions	1722×1134×30mm (67.79×44.65×1.18 inch)
Weight	22 kg (48.50 lbs)
Front Glass	3.2mm,Anti-Reflection Coating, High Transmission, Low Iron, Tempered Glass
Frame	Anodized Aluminium Alloy
Junction Box	IP68 Rated
Output Cables	TUV 1×4.0mm² (+): 400mm , (-): 200mm or Customized Length

SPECIFICATIONS

Module Type	JKM400N-54HL4-B		JKM405N-54HL4-B		JKM410N-54HL4-B		JKM415N-54HL4-B		JKM420N-54HL4-B	
	STC	NOCT	STC	NOCT	STC	NOCT	STC	NOCT	STC	NOCT
Maximum Power (Pmax)	400Wp	301Wp	405Wp	305Wp	410Wp	308Wp	415Wp	312Wp	420Wp	316Wp
Maximum Power Voltage (Vmp)	31.28V	28.89V	31.47V	29.08V	31.66V	29.59V	31.85V	29.78V	32.04V	29.97V
Maximum Power Current (Imp)	12.79A	10.30A	12.87A	10.36A	12.95A	10.42A	13.03V	10.48A	13.11A	10.54A
Open-circuit Voltage (Voc)	37.38V	35.50V	37.58V	35.69V	37.77V	35.88V	37.96V	36.06V	38.15V	36.24V
Short-circuit Current (Isc)	13.55A	10.94A	13.62A	11.00A	13.68A	11.04A	13.74A	11.09A	13.80A	11.14A
Module Efficiency STC (%)	20.48%		20.74%		21.00%		21.25%		21.51%	
Operating Temperature(℃)	-40℃~+85℃									
Maximum system voltage	1000VDC (IEC)									
Maximum series fuse rating	25A									
Power tolerance	0~+3%									
Temperature coefficients of Pmax	-0.30%/℃									
Temperature coefficients of Voc	-0.25%/℃									
Temperature coefficients of Isc	0.046%/℃									
Nominal operating cell temperature (NOCT)	45±2℃									

*STC: Irradiance 1000W/m² Cell Temperature 25℃ AM=1.5

NOCT: Irradiance 800W/m² Ambient Temperature 20℃ AM=1.5 Wind Speed 1m/s

©2021 Jinko Solar Co., Ltd. All rights reserved.
Specifications included in this datasheet are subject to change without notice.
Datasheet valid in Europe only.

GS-ROOF

TILE ROOF, TIN ROOF AND
TILT ROOF SYSTEM

PUB16 JAN01

INSTALLATION GUIDE

GS-ROOF SYSTEM

Fastensol
Smart energy

INDEX

Part I. Safety and Installer Responsibilities. 2

Part II. Tools Required for Installation. 3

Part III. Designning Your Frame System 4

Part IV. System Overview and Components

[4.1.] Tile roof mounting system 8

[4.2.] Tin roof mounting system.. 9

[4.3.] Tilt roof mounting system. 10

[4.4.] Triangle roof mounting system.. 11

[4.5.] Klip-lok roof moutning system 12

Part IV. Installation

[5.1.] Installing tile roof mounting system 13

[5.2.] Installing tin roof mounting system 16

[5.3.] Installing tilt roof mounting system. 17

[5.4.] Installing triangle roof mounting system 20

[5.5.] Installing klip-loc roof moutning system 23

[5.6.] Grounding 25

[5.7.] Installing Isolator Bracket 25

Part V. Others

Warranty 26

Consumer Guarantees. 27

Contact Details 27

Maintenance and Cleaning. 28

References 28

Certificate of Compliance 29

Thank you for choosing the Fastensol solar panel roof mounting system. Made from custom-designed aluminium extrusions and components, Fastensol's streamlined design and improved frame strength greatly simplify solar panel installation.

Offering a high level of adjustability for module width and depth Fastensol's versatile design makes it suitable for a wide variety of building types and zones including residential, commercial and remote environments.

Fastensol is backed by a 10-year warranty and is compliant with the AS/NZS 1170.2:2011/ Amdt 2:2012 on wind actions, AS/NZS16641.1:1997 on aluminium structures, AS1720.1:2012 on timber structures, AS/NZS4600:2005 on cold-formed steel structures.

INSTALLATION OF THIS PRODUCT IS TO BE PERFORMED ONLY BY PROFESSIONALLY TRAINED INSTALLERS.

Any attempt by an unqualified person to install this product could result in death or serious injury.

Part I. SAFETY AND INSTALLER RESPONSIBILITIES

Handling and Installing Fastensol

It is critically important that safety practices are observed when installing

- ✓ Do not throw or roughly handle any Fastensol components.
- ✓ Do not bring Fasrensol system into contact with sharp or heavy objects.
- ✓ Do not modify Grace solar components in any way. The exchange of bolts, drilling of holes, bending or any other physical changes not described in standard installation procedure will void the warranty.
- ✓ It is the installer's responsibility to verify the integrity of the structure to which Fastensol components is fixed. Roofs or structures with rotten/rusted bearers, undersized bearers, excessively spaced bearers, or any other unsuitable substructure cannot be used with Fastensol components, and installation on such structures will void the warranty, and could result in death or serious injury.

Wind and Climate Design

A Fastensol frame installed in accordance with this installation manual is compliant with AS/NZS 1170.2:2011/Amdt 2:2012.

This manual (including the drawings) cannot cover all types of buildings and eventualities.

AS/NZS 1170.2:2011/Amdt 2:2012 provides guidance on determining the wind pressures applicable to your Fastensol install site, taking into account roof shape and geographic location. Sufficient guidance is given in this document, but you may wish to procure a copy of these standards if your company installs Australia/New Zealand wide.

- ✓ REMEMBER average wind speeds are higher for structures mounted closer to the roof perimeter zone (edge).
- ✓ Make sure your installation complies with local and national building codes. Take into account relevant design parameters (wind speed, exposure and topographic factor) when determining the loading for the installation.
- ✓ If alternative fasteners are used to fix the framing to the roof (assuming supplied fasteners are unsuitable for any reason), all screw fasteners must conform to corrosion resistance Class 4 Australian Standard AS3566 and be of equal or greater strength to those supplied with your Fastensol order.

Part II. TOOLS REQUIRED FOR INSTALLATION

✓ **T-bar Allen Key or 6 mm hexagonal driver bit**
If using a 6 mm driver bit, make sure the cordless power tool used for driving has a hand-tight clutch setting and a fine (soft) impact drive to prevent damage to the fragile glass panels and threads on the SunLock framing.

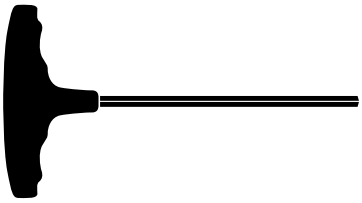

✓ **Cordlessdrill**
Drill or impact driver for driving roof material fixings.

✓ **Angle grinder**
For terracotta tile roof installation, and angle grinder fitted with a continuous edge diamond tipped tile0cutting blade; gloves, hearing protection, a face protection mask, and a suitably rated breathing protection mask for all people in proximity of grinding

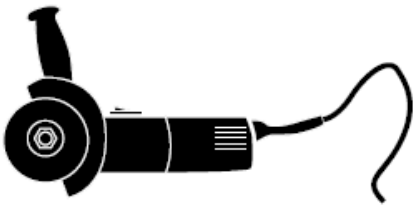

✓ **Gloves**
Protect the hazard of the sharp corners.

✓ **Cord or color pen**
Mark the installation position;

✓ **Spirit level**

✓ **Rule**

Part III. DESIGNING YOUR FRAMING SYSTEM

Step 1: Determine the wind region of your installation site

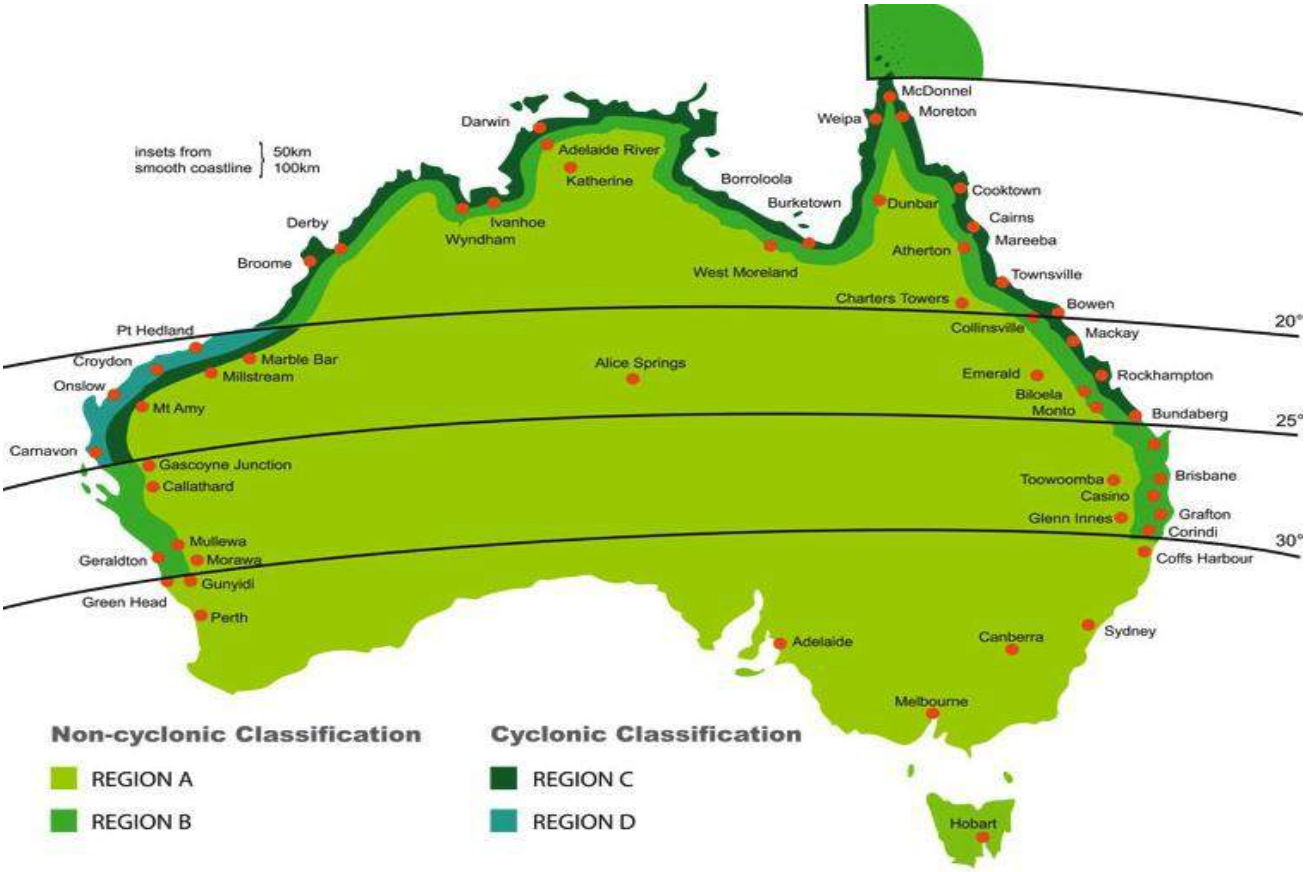

Region A:

- Callytharra Springs
- Gascoyne Junction
- Green Head
- Kununurra
- Lord Howe Island
- Morawa
- Toowoomba
- Wittanoom
- Bourke

Region B:

- Adelaide River
- Atherton
- Biloela
- Brisbane
- Christmas Island
- Collinsville
- Corindi
- Geraldton
- Ivanhoe
- Kyogle
- Marble Bar
- Mullewa
- Norfolk Island
- Torres Strait Islands
- Wyndham

Region C:

- Borroloola
- Broome
- Bundaberg
- Burketown
- Cairns
- Cocos Islands
- Darwin
- Derby
- Karumba
- Mackay
- Mareeba
- Millstream
- Moreton
- Nhulunbuy
- Normanton
- Rockhampton
- Townsville

Region D:

- Carnarvon
- Exmouth
- Karratha
- Onslow
- Port Hedland

Step 2: Determine Roof Installation Roof Areas

Solar panels can be installed anywhere on the roof, as long as sufficient fixings are used. Higher wind speeds are encountered at the edges of roofs and therefore more fixings are required in these areas.

For a flush mounted array, a roof can be divided into two zones, the central zone and the end zone. The width of these zones can be determined based on the length of the building.

For a tilted array, a roof can be divided into three zones, the internal zone, intermediate zone and the edge zone. The width of these outer zones can be determined based on the length, width and average height of the building.

If fixings are located in the intermediate, edge or end zones, then the maximum spacing to the next fixing must be reduced, as per the table in the drawings.

Determining the width of the central and end zones, óB/3ô

The width of the central and end zones is determined by calculating the roof length and dividing this result by 3.

An exclusion zone of 200 mm must be made on the edges of the roof.

Determining the width of the edge and intermediate zones, óAô

The width of the edge and and intermediate zones, ‘A’, is determined by calculating each of the following values, and then using the smallest:

- 0.2 x B
- 0.2 x D
- H

Flush mounted arrays:

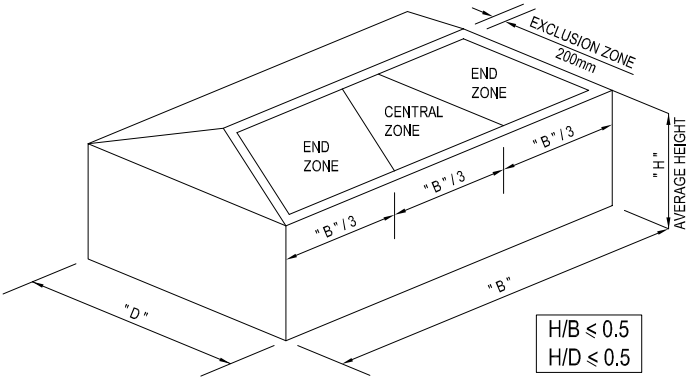

Tilt mounted arrays:

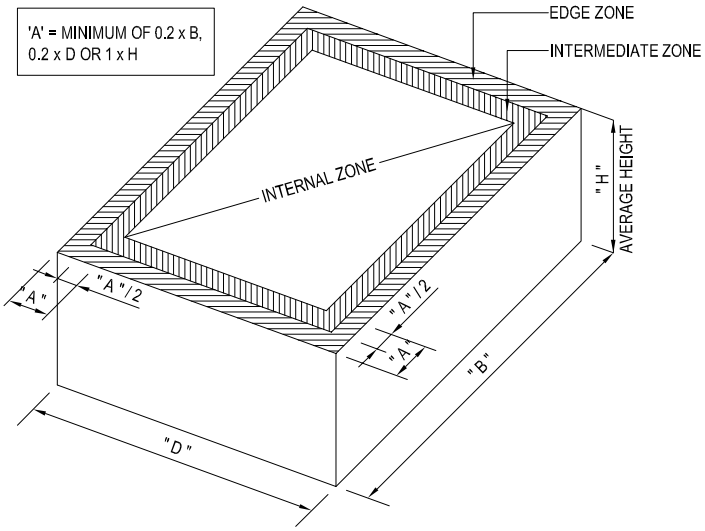

Determine the height of the of your installation site:

- This document provides sufficient information for Fastensol system installation height less than 20meters. If your installation site is more than 20 meters in height, please contact Fastensol to obtain engineering data to support your installation.

Determine Roof slope:

- Fastensol's system can be used for roof slope up to 60 degrees. Please verify the Installation site roof slope should be between 0 degrees and 60 degrees.

Step 3: Determine the Maximum Rail Support Spacing

FASTEN SOLAR FR RAIL 2 FOR PITCHED ROOFS

Maximum Fixing Spacing Table Tiled Roof With Roof Hook Fixed to Rafter with minimum of 2x12 gauge (5.5 mm minimum diameter, 10 tpi) screws with 50 mm minimum embedment into timber Wind Region to AS Code 1170.2 - 2011								
	Wind Region A		Wind Region B		Wind Region C		Wind Region D	
Height above Ground	Remote from Roof Edge	Adjacent to Roof Edge	Remote from Roof Edge	Adjacent to Roof Edge	Remote from Roof Edge	Adjacent to Roof Edge	Remote from Roof Edge	Adjacent to Roof Edge
5 metres	**2,250**	1,590	**1,480**	950	**885**	580	**540**	N/S
10 metres	**2,015**	1,300	**1,200**	780	**790**	520	**480**	N/S
15 metres	**1,820**	1,165	**1,080**	700	**690**	450	**420**	N/S
20 metres	**1,700**	1,100	**1,020**	660	**615**	400	**375**	N/S

Maximum Fixing Spacing Table Pitched Metal Roof with “L” Bracket Fixed to Purlin with minimum of 1x12 gauge (5.5 mm minimum diameter, 14 tpi & 10 tpi) screws for fixing to steel & timber respectively Wind Region to AS Code 1170.2 - 2011								
	Wind Region A		Wind Region B		Wind Region C		Wind Region D	
Height above Ground	Remote from Roof Edge	Adjacent to Roof Edge	Remote from Roof Edge	Adjacent to Roof Edge	Remote from Roof Edge	Adjacent to Roof Edge	Remote from Roof Edge	Adjacent to Roof Edge
5 metres	**2,250**	1,530	**1,420**	915	**850**	555	**515**	N/S
10 metres	**1,950**	1,240	**1,155**	750	**760**	500	**460**	N/S
15 metres	**1,750**	1,120	**1,040**	675	**660**	430	**405**	N/S
20 metres	**1,640**	1,050	**980**	640	**590**	390	**360**	N/S

FASTEN SOLAR FR RAIL 2 FOR FLAT METAL ROOFS

Maximum Fixing Spacing Table **Fixing at between 10 to 15 degrees** Fixed to Flat Metal Roof with minimum of 2x12 gauge (5.5 mm minimum diameter, 14 tpi & 10 tpi) screws for fixing to steel & timber respectively Screwed through to 1.2 mm minimum BMT steel or 50 mm minimum embedment into timber Wind Region to AS Code 1170.2 - 2011				
	Wind Region A	Wind Region B	Wind Region C	Wind Region D
5 metres	1,300	800	500	N/S
10 metres	1,100	650	450	N/S
15 metres	900	600	400	N/S
20 metres	800	550	350	N/S

Maximum Fixing Spacing Table **Fixing at between 10 to 15 degrees** Fixed to Flat Metal Roof with Klip-Loc Clamp Wind Region to AS Code 1170.2 - 2011				
	Wind Region A	Wind Region B	Wind Region C	Wind Region D
5 metres	1,300	800	500	N/S
10 metres	1,100	650	450	N/S
15 metres	900	600	400	N/S
20 metres	800	550	350	N/S

Maximum Fixing Spacing Table
Fixing at between 15 to 30 degrees
Fixed to Flat Metal Roof with minimum of
2x12 gauge (5.5 mm minimum diameter, 14 tpi & 10 tpi) screws for fixing to steel & timber respectively
Screwed through to 1.2 mm minimum BMT steel or 50 mm minimum embedment into timber
Wind Region to AS Code 1170.2 - 2011

	Wind Region A	Wind Region B	Wind Region C	Wind Region D
5 metres	650	400	250	N/S
10 metres	550	325	220	N/S
15 metres	500	300	200	N/S
20 metres	450	275	N/S	N/S

Maximum Fixing Spacing Table
Fixing at between 15 to 30 degrees
Fixed to Flat Metal Roof with Klip-Loc Clamp
Wind Region to AS Code 1170.2 - 2011

	Wind Region A	Wind Region B	Wind Region C	Wind Region D
5 metres	650	400	250	N/S
10 metres	550	325	220	N/S
15 metres	500	300	200	N/S
20 metres	450	275	N/S	N/S

Maximum Fixing Spacing Table
Fixing at between 30 to 60 degrees
Fixed to Flat Metal Roof with minimum of
2x12 gauge (5.5 mm minimum diameter, 14 tpi & 10 tpi) screws for fixing to steel & timber respectively
Screwed through to 1.2 mm minimum BMT steel or 50 mm minimum embedment into timber
Wind Region to AS Code 1170.2 - 2011

	Wind Region A	Wind Region B	Wind Region C	Wind Region D
5 metres	650	400	250	N/S
10 metres	550	325	220	N/S
15 metres	500	300	200	N/S
20 metres	450	275	N/S	N/S

Maximum Fixing Spacing Table
Fixing at between 30 to 60 degrees
Fixed to Flat Metal Roof with Klip-Loc Clamp
Wind Region to AS Code 1170.2 - 2011

	Wind Region A	Wind Region B	Wind Region C	Wind Region D
5 metres	650	400	250	N/S
10 metres	550	325	220	N/S
15 metres	500	300	200	N/S
20 metres	450	275	N/S	N/S

Part IV. System Overview and Components

[4.1.] Tile roof mounting system

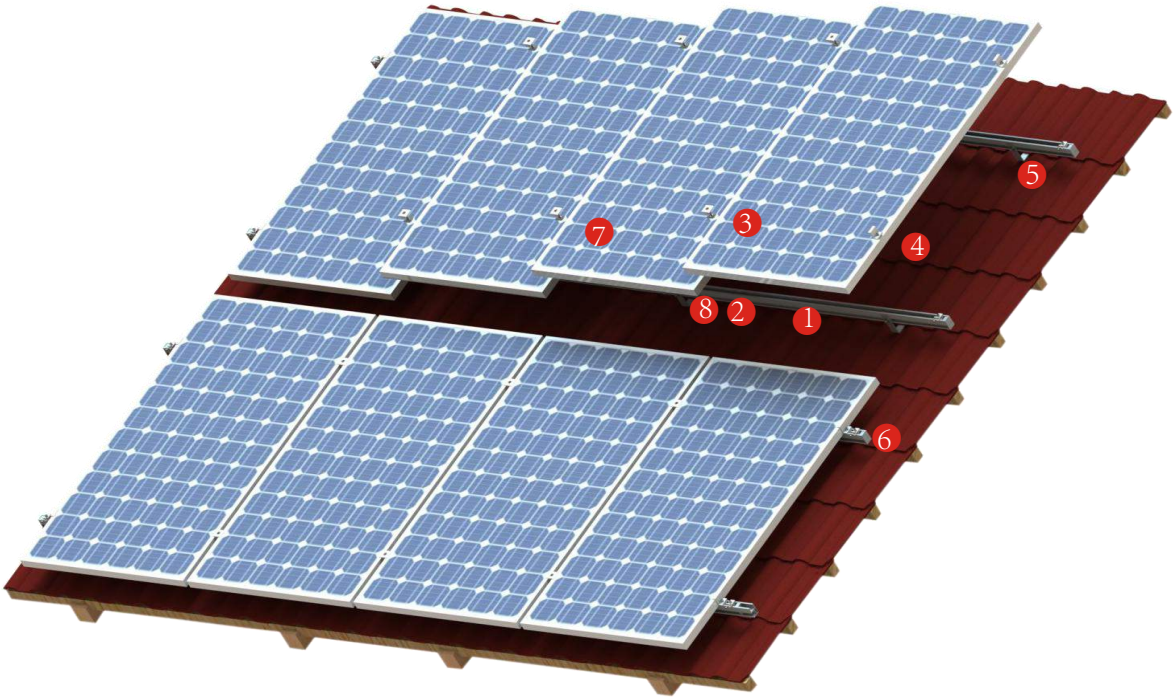

❶ **Standard Rail** – Supports PV modules. Use two per row of modules. Aluminum extrusion, anodized.

Standard Rail Length	
808~826mm wide panels	990~1020mm wide panels
2560mm	4200mm
3405mm	

❷ **Rail splice** – Extend Fastensol Rails to any length as required by the quantity or width of the solar panels.
Tapping screw for Rail splice - st6.3*25 ×4pcs.

❸ **Mid Clamp Kit** – Standard pre-assembly for the usual panels with thickness 30, 35, 40, 46, 50, 57mm

❹ **End Clamp Kit** – Standard pre-assembly for the usual panels with thickness 30, 35, 40, 46, 50, 57mm

❺ **Stainless Steel Tile Hook** - Roof mounts secure the railing to tile roofs.
Aluminum Tile Hook - Roof mounts secure the railing to tile roofs.
Wood screw - st6.3*80 ×3pcs

❻ **Grounding Lug -**To ensure the entire system grounded and safe.

❼ **Bonding Jumper -**Electorically connect spliced rails .

❽ **Grounding Clip -**Cooperated with mid Clamp to install under the Rail

[4.2.] Tin roof mounting system

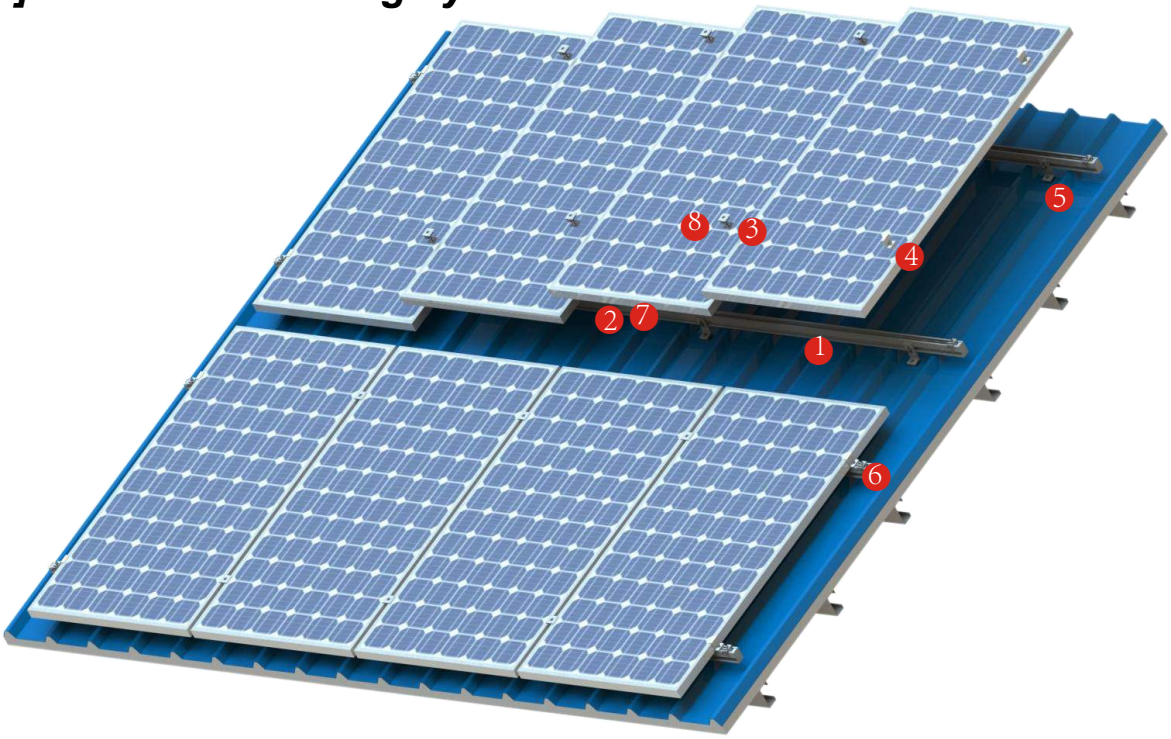

❶ **Standard Rail** – Supports PV modules. Use two per row of modules. Aluminum extrusion, anodized.

Standard Rail Length	
808~826mm wide panels	990~1020mm wide panels
2560mm	4200mm
3405mm	

❷ **Rail splice** – Extend Fastensol Rails to any length as required by the quantity or width of the solar panels.

Tapping screw for Rail splice - st6.3*25 ×4pcs.

❸ **Mid Clamp Kit** – Standard pre-assembly for the usual panels with thickness 30, 35, 40, 46, 50, 57mm

❹ **End Clamp Kit** – Standard pre-assembly for the usual panels with thickness 30, 35, 40, 46, 50, 57mm

❺ **L-foot** - Roof mounts secure the railing to steel roofs.

Each L-foot is supplied with a potable grade EPDM washer to prevent water ingress or galvanic corrosion with the roof material.

Tapping screw for L-foot - st6.3*80 ×1pc

❻ **Grounding Lug -**To ensure the entire system grounded and safe.

❼ **Bonding Jumper -**Electorically connect spliced rails .

❽ **Grounding Clip -**Cooperated with mid Clamp to install under the Rail

[4.3.] Tilt roof mounting system

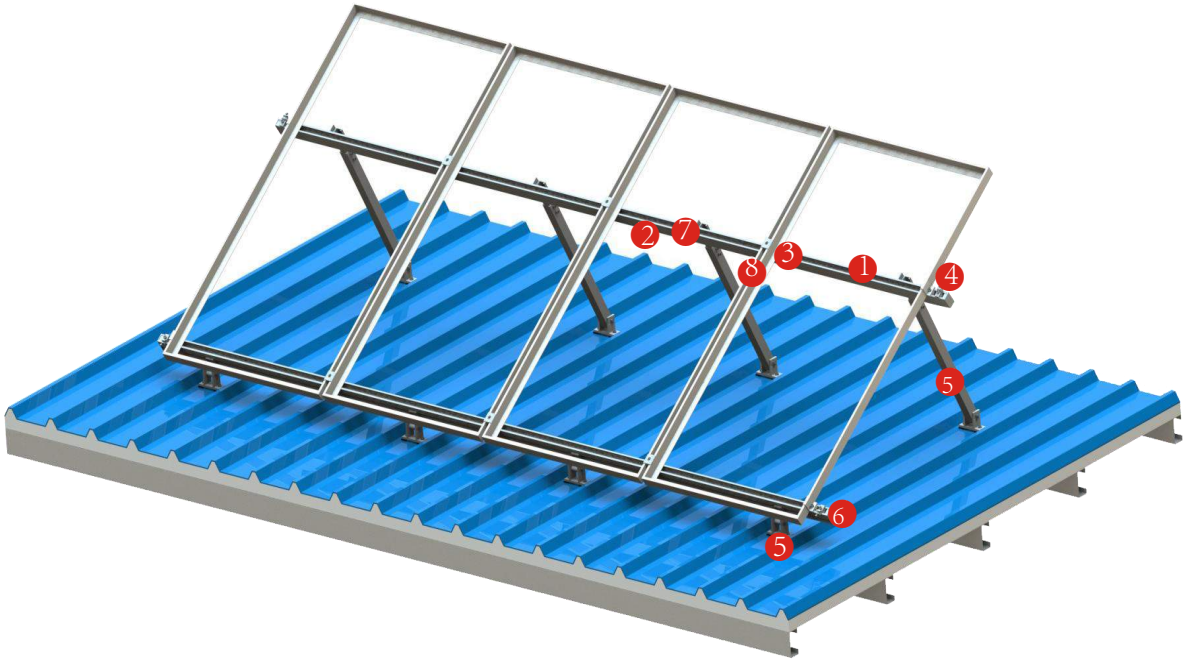

❶ **Standard Rail** – Supports PV modules. Use two per row of modules. Aluminum extrusion, anodized.

Standard Rail Length	
808~826mm wide panels	990~1020mm wide panels
2560mm	4200mm
3405mm	

❷ **Rail splice** – Extend Fastensol Rails to any length as required by the quantity or width of the solar panels.
Tapping screw for Rail splice - st6.3*25 ×4pcs.

❸ **Mid Clamp Kit** – Standard pre-assembly for the usual panels with thickness 30, 35, 40, 46, 50, 57mm.)

❹ **End Clamp Kit** – Standard pre-assembly for the usual panels with thickness 30, 35, 40, 46, 50, 57mm.

❺ **Tilt Front Leg / Tilt Rear Leg** - 10/15°, 15/30° and 30/60° tilt solutions.
Each base is supplied with a potable grade EPDM washer to prevent water ingress or galvanic corrosion with the roof material.
Tapping screw - st6.3*80 ×3pcs

❻ **Grounding Lug -**To ensure the entire system grounded and safe.

❼ **Bonding Jumper -**Electorically connect spliced rails .

❽ **Grounding Clip -**Cooperated with mid Clamp to install under the Rail

[4.4.] Triangle roof mounting system

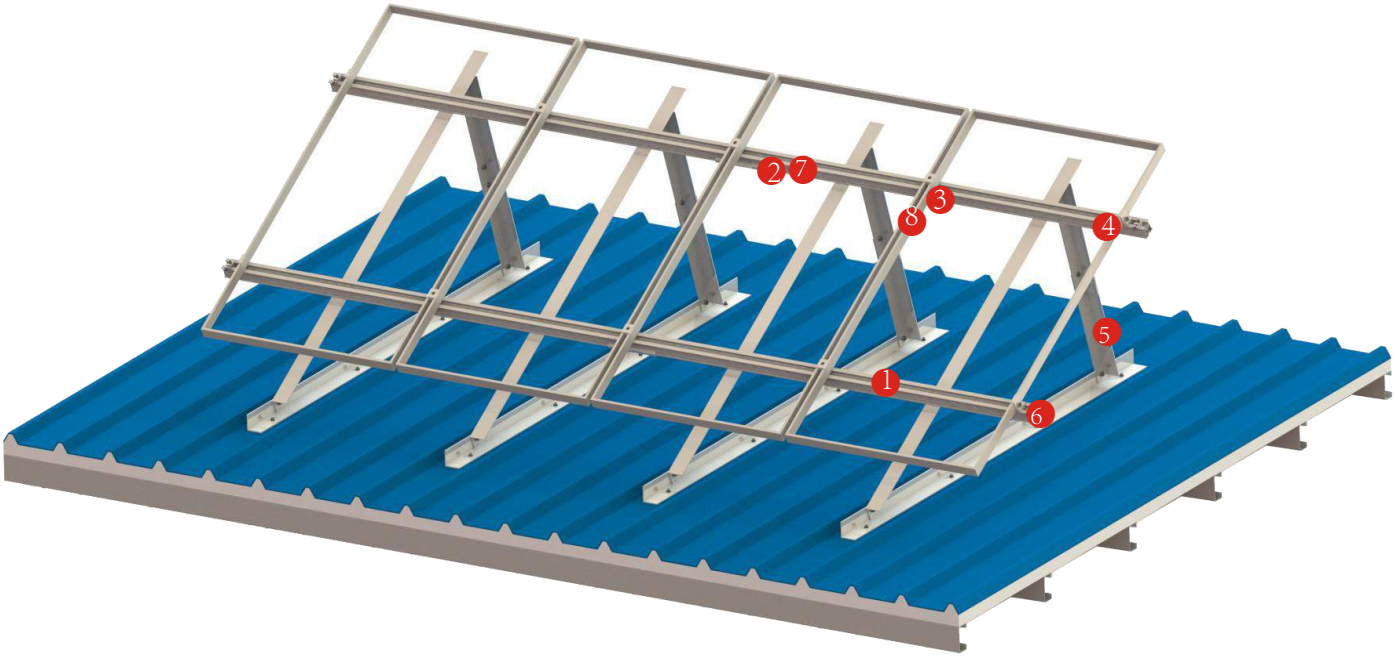

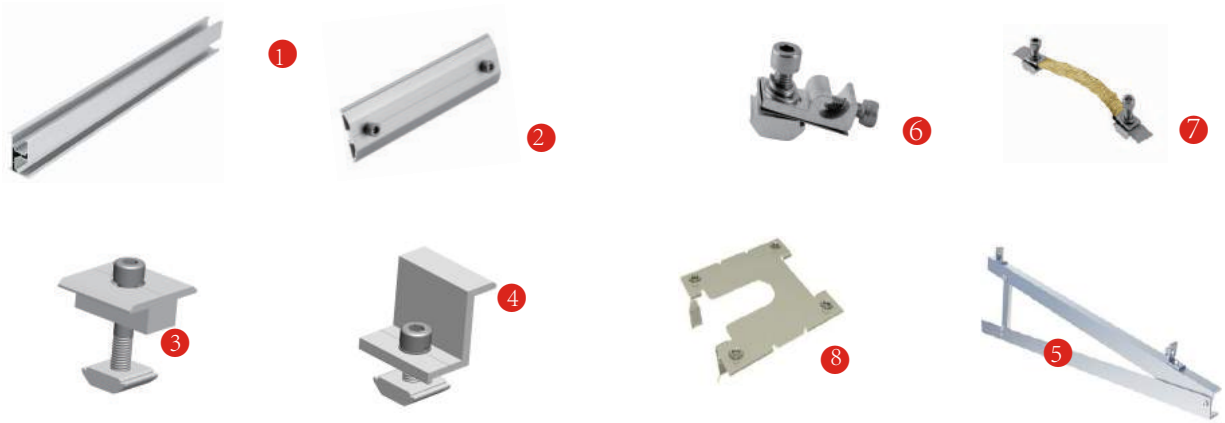

❶ **Standard Rail** – Supports PV modules. Use two per row of modules. Aluminum extrusion, anodized.

Standard Rail Length	
808~826mm wide panels	990~1020mm wide panels
2560mm	4200mm
3405mm	

❷ **Rail splice** – Extend Fastensol Rails to any length as required by the quantity or width of the solar panels.
Tapping screw for Rail splice - st6.3*25 ×4pcs.

❸ **Mid Clamp Kit** – Standard pre-assembly for the usual panels with thickness 30, 35, 40, 46, 50, 57mm.

❹ **End Clamp Kit** – Standard pre-assembly for the usual panels with thickness 30, 35, 40, 46, 50, 57mm.

❺ **Triangle bracket** - mount the module tilt a certain angle on a roof. Each Tri-bracket include 2 pcs L connector to connect with rail.
Tapping screw - st6.3*80 ×2pcs

❻ **Grounding Lug -**To ensure the entire system grounded and safe.

❼ **Bonding Jumper -**Electorically connect spliced rails .

❽ **Grounding Clip -**Cooperated with mid Clamp to install under the Rail

[4.5.] Klip-lok roof mounting system

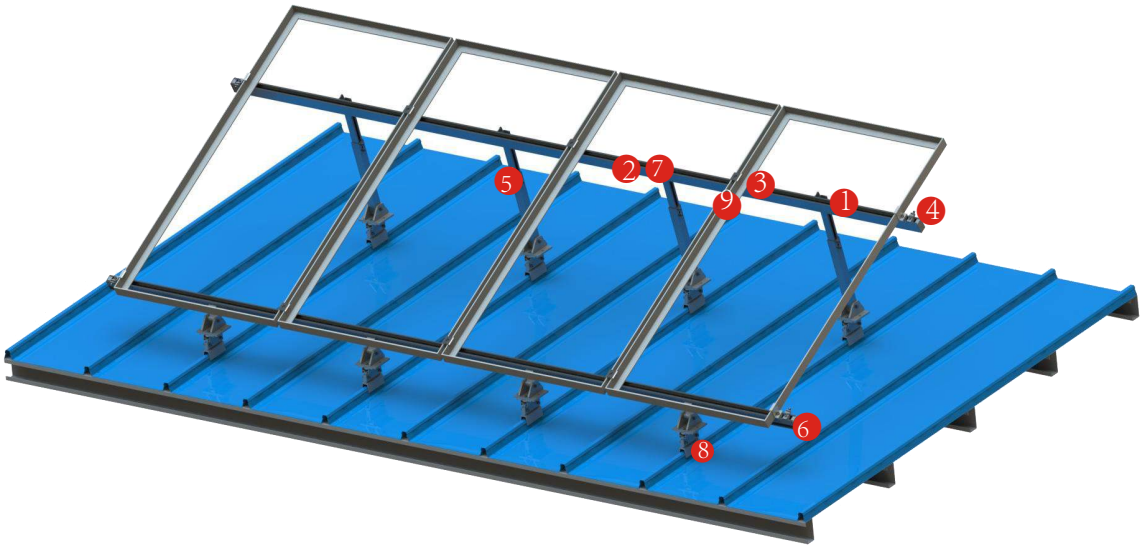

❶ **Standard Rail** – Supports PV modules. Use two per row of modules. Aluminum extrusion, anodized.

Standard Rail / Cable Rail Length	
808~826mm wide panels	990~1020mm wide panels
2560mm	4200mm
3405mm	

❷ **Rail splice** – Extend Fastensol Rails to any length as required by the quantity or width of the solar panels.
Tapping screw for Rail splice - st6.3*25 ×4pcs.

❸ **Mid Clamp Kit** – Standard pre-assembly for the usual panels with thickness 30, 35, 40, 46, 50, 57mm.

❾ **Grounding Clip -**Cooperated with mid Clamp to install under the Rail

❹ **End Clamp Kit** – Standard pre-assembly for the usual panels with thickness 30, 35, 40, 46, 50, 57mm.

❺ **L-foot / Tilt Front Leg &Tilt Rear Leg** - Fixed with the clamps. (no need the EPDM wahser and tapping screw).

❻ **Grounding Lug -**To ensure the entire system grounded and safe.

❼ **Bonding Jumper -** Electorically connect spliced rails .

❽ **klamp Lock 406** - For klip-Lok 406;
klamp Lock 700 - For klip-Lok 700\Speed Deck Ultra KingKlip 700 ;
Sand seam Clamp - For Butler roof.

Part IV. Installation

[5.1.] Installing tile roof mounting system

Step 1: Designing the module field

According to the specification of modules, calculate the length of rails, distance and span between two hooks. Details and drawings is as below:

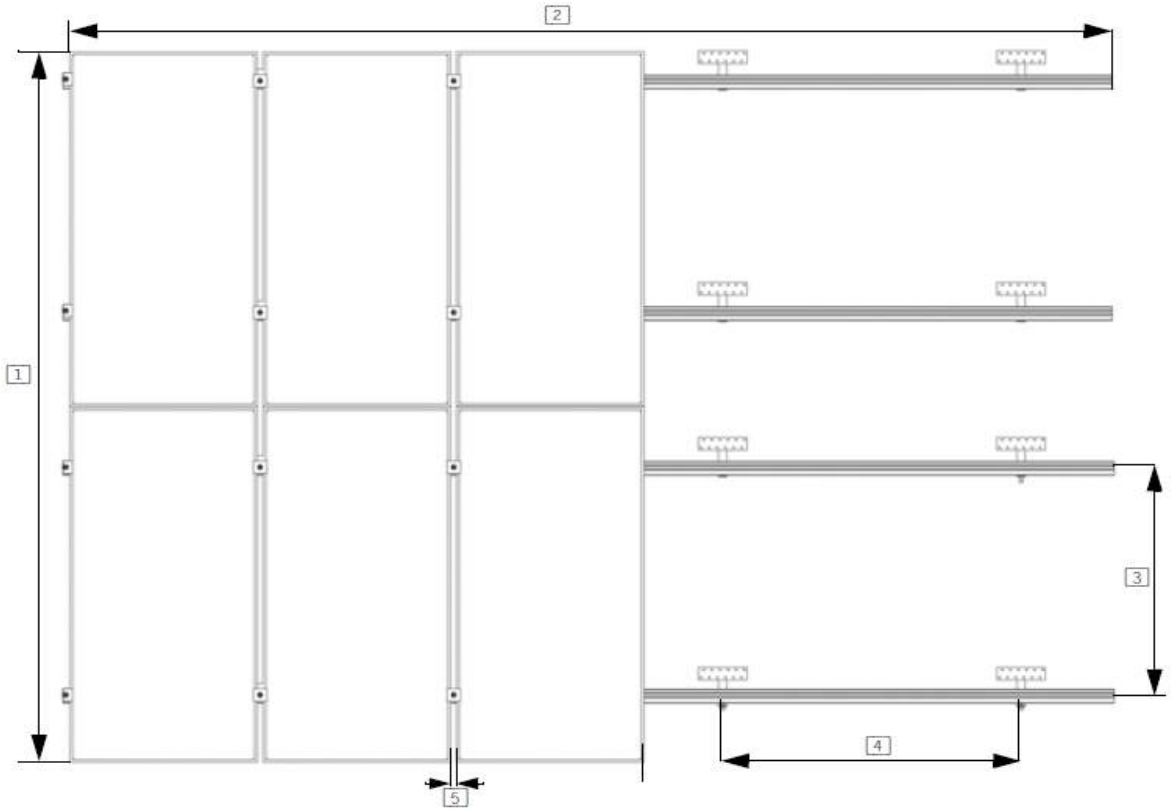

1. Height of the module field: module height x number of modules vertically
2. Width of the module field: number of modules horizontally x (width of the module + 18 mm)+32 mm
3. Distance between roof connections vertically (according to the clamping points pre-defined by the module producer): Quarter-points of the modules, about 1/2 of module height.
4. Distance between roof connections horizontally: Depending on the distance between rafters and on the static requirements (please see the ***Part III*** on page 6).
5. Distance between modules: 17 mm

When positioning the modules, please take into consideration

- That the values above are
- That dimensions of tiles or other roof covering and the position of the rafters define the precise actual horizontal distance between roof connections
- That the distance between roof laths defines the precise actual vertical distance between roof connections.

Part IV. Installation

[5.1.] Installing tile roof mounting system

Step 2: Installing tile bracket

Remove the roof tiles at the marked positions or simply lift them up slightly. Input the roof hook to the wooden beam. Fix the roof hooks with 3pcs wood screws (st6.3x80).

Note: Minimum 2 pcs wooden screws

Cover the hooks by the removed tile

If necessary, use an angle grinder or hammer to cut a concavity in the tile that covers the roof hook at the point where the roof hook comes through.(Caution! Must not use fixed roof hook as a ladder, as this extreme point load could damage the tile below.

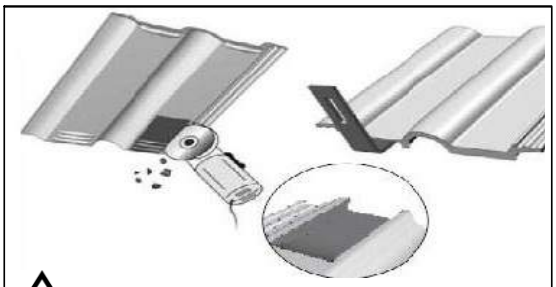

⚠ To minimize risk of injury, exercise caution when operating tile cutting tool, and follow tool manufacturer's safety instructions. Failure to follow appropriate safety procedures could result in severe lacerations of dismemberment.

Step 2: Installing the rail

Fix the rail to tile hook by inserting the Tbolt into the rail channel, and then fasten the flange nut. The rail can be adjusted vertically within the roof attachment slot when bolts are loosely fastened.

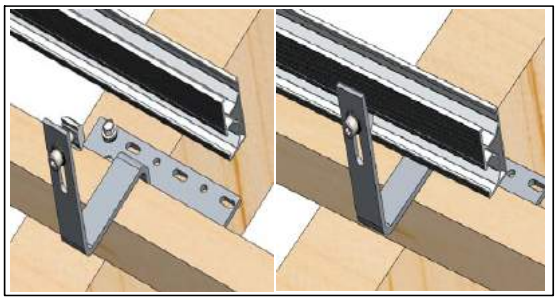

Installation of the splice to connect multiple rails together. Slide the splices on the rear side of the pre-assembled rails halfway to the side. Fasten the first M8 bolt firmly using the Allen key. Now slide the next rail segment into the splice. Tighten the second M8 bolt .The connection is finished.

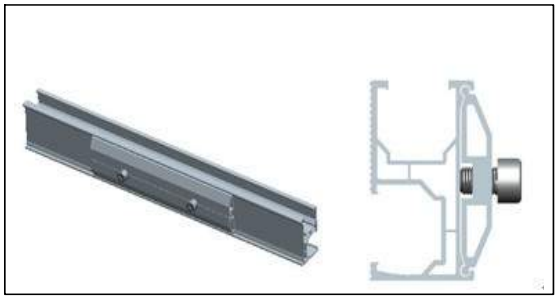

Step 3. Installing the End Clamp

Insert Tbolt of the end clamp into the rail channel. Using a 10 mm hex driver, secure the first solar panel to the railing starting as close to the end of the row as possible. A minimum of 50 mm between the end of the rail and edge of the first solar panel is required(recommended torque is 15-20Nm).

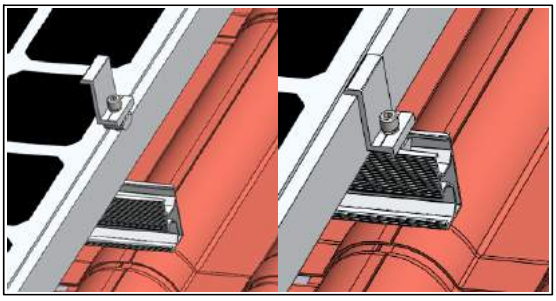

Step 4. Installing the Mid Clamp

Insert the T-clip of the mid clamp into the rail channel and position the clamp against the first panel frame. Hand-tighten the screw 2-3 turns to loosely hold the clamp in position. Ensure the EarthLock washer is placed between the rail and the frame of the panel ***(pls refer to the chapter [5.6.] if you have any questions about the grounding installation).***

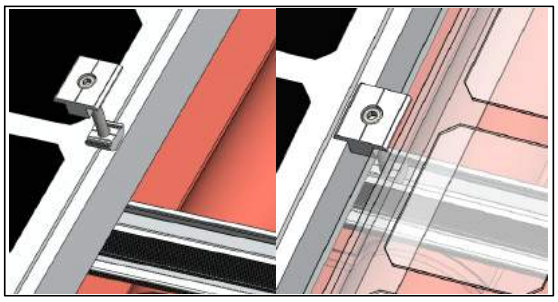

Step 5. Finish installing all the panels

Repeat doing last step till finish installing all the panels. Check the whole system and re-fix all outer screws after finish installing the panels.

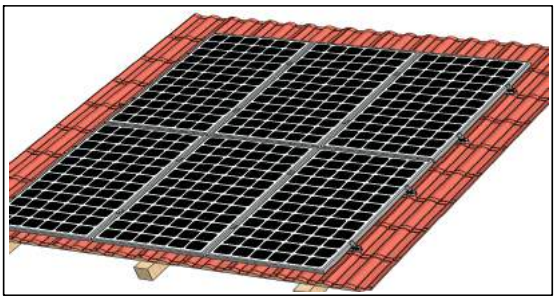

[5.2.] Installing tin roof mounting system

Step 1: Installing L foot

Fasten the first L foot with the purlin using 1 pc st6.3 x 80 tapping screw; fix other L foot to the rafter according to your plans. (Note: The EPDM rubber pad play the role of waterproof).

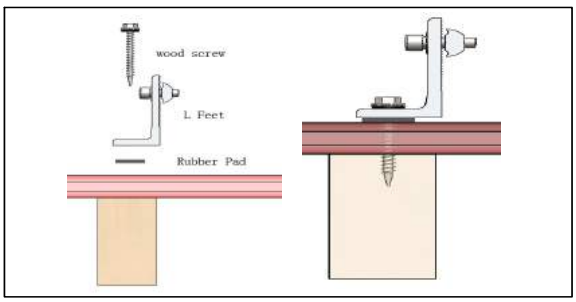

Fix the last L foot and then wire those two feet. Please make sure the two L feet are in the same height. Repeat the above solutions, Make sure all L feet are in a straight line and in the same height.

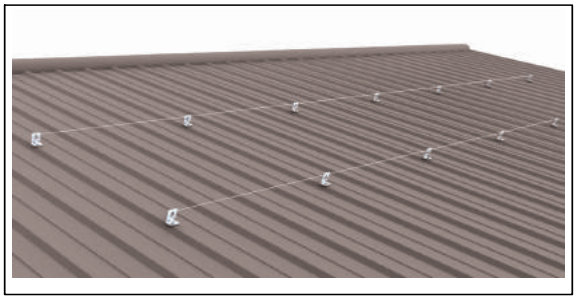

Step 2: Installing the Rail

Connect the rail to L foot by inserting the T-clip into the rail channel. Make sure the ridged rail surface faces the ridged surface of L foot. Fasten the cap screw on the keylock 2-3 turns to loosely hold the rail in position. The rail can be adjusted vertically within the roof attachment slot when bolts are loosely fastened.

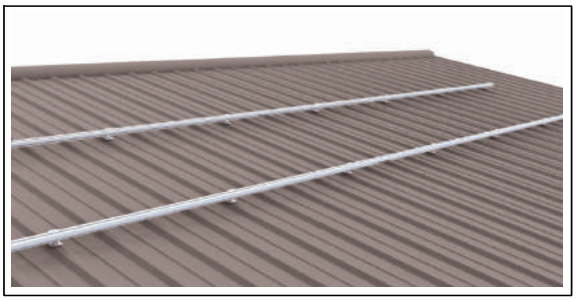

Step 3. Installing the End Clamp

Insert T-clip of the end clamp into the rail channel. Using a 6 mm hex driver/Allen key, secure the first solar panel to the railing starting as close to the end of the row as possible. A minimum of 50 mm between the end of the rail and edge of the first solar panel is required(recommended torque is 15-20Nm).

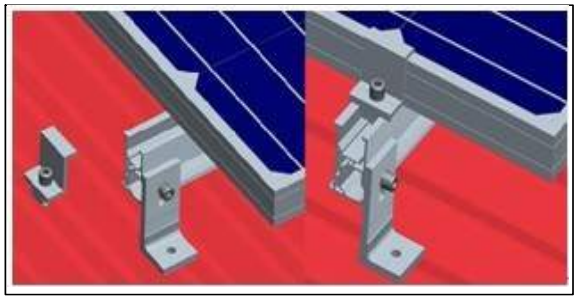

Step 4. Installing the Mid Clamp

Insert the T-clip of the mid clamp into the rail channel and position the clamp against the first panel frame. Hand-tighten the screw 2-3 turns to loosely hold the clamp in position. Ensure the EarthLock washer is placed between the Fastensol rail and the frame of the pane***l (pls refer to the chapter [5.6.] if you have any questions about the grounding installation).***

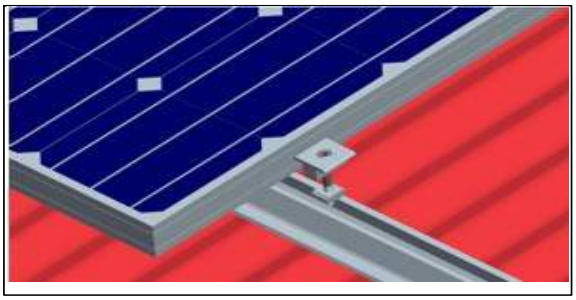

Step 5. Finish installing all the panels

Repeat doing last step till finish installing all the panels. Check the whole system and re-fix all outer screws after finish installing the panels.

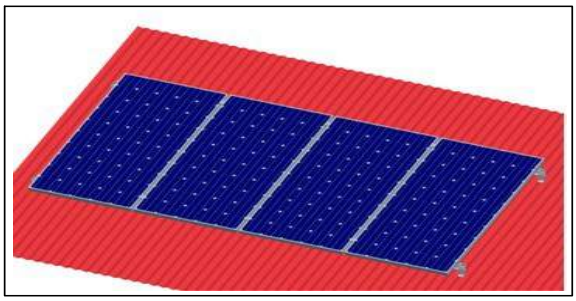

[5.3.]Installing tilt roof mounting system(adjustable)

Step 1: Designing the module field

According to the specification of modules, calculate the length of rails, distance and span between two support leg. Details and drawings is as below:

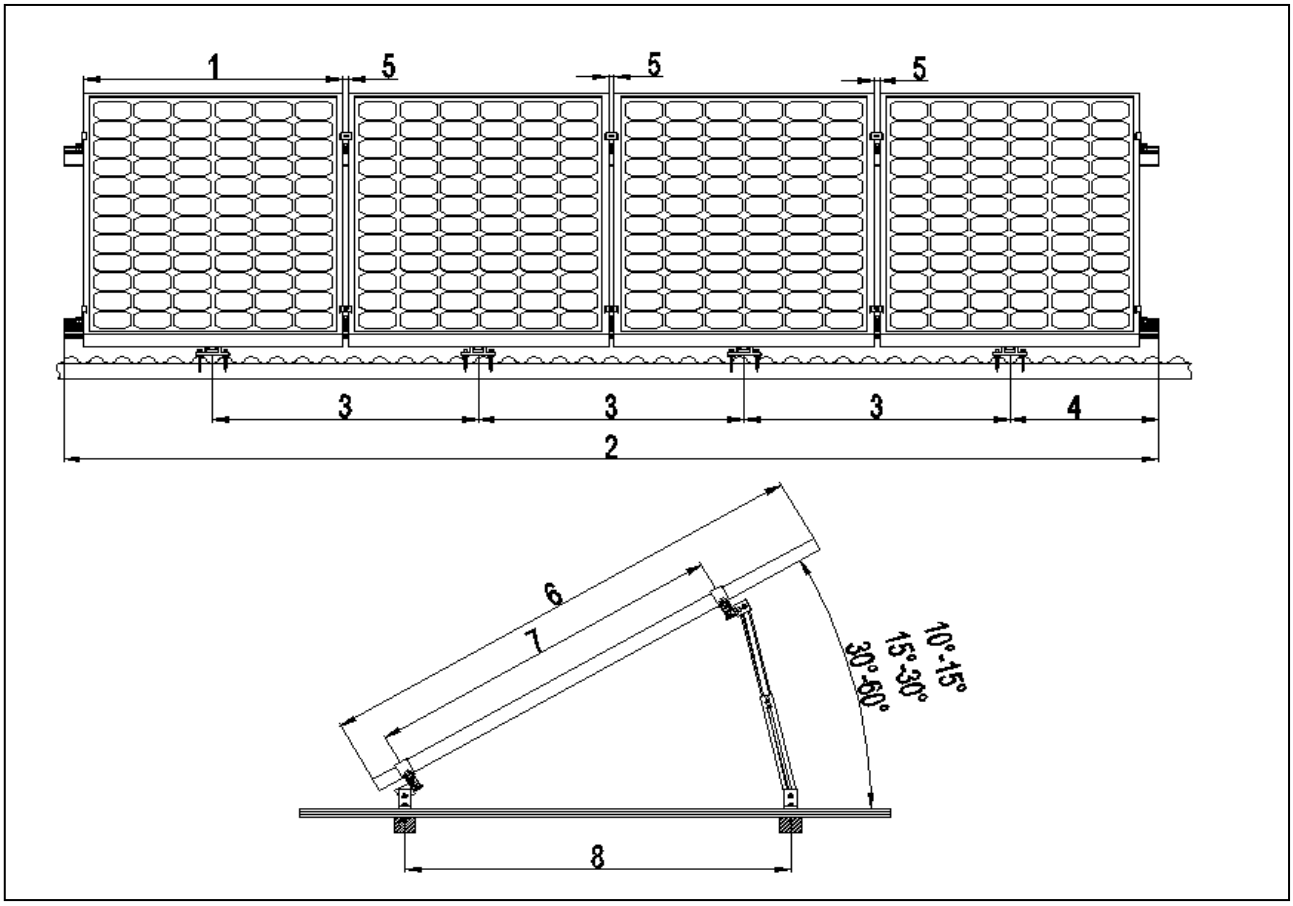

1. Width of the module
2. Length of Rail: number of modules horizontally x (width of the module + 18 mm)+32 mm
3. Distance between roof connections horizontally: Depending on the distance between rafters and on the static requirement.
4. Cantilever Length: less than half of dimension 3
5. Distance between modules: 17 mm
6. Length of the module
7. Length of support: similar with the dimension 8
8. Front and Rear Space: 1200~1400mm

Step 2: Installing the Front Leg

Determine the position of the front leg according to your plans. Shim the front leg with rubber, Fix the front leg to the rafter using 2pcs st6.3*80 tapping screws.

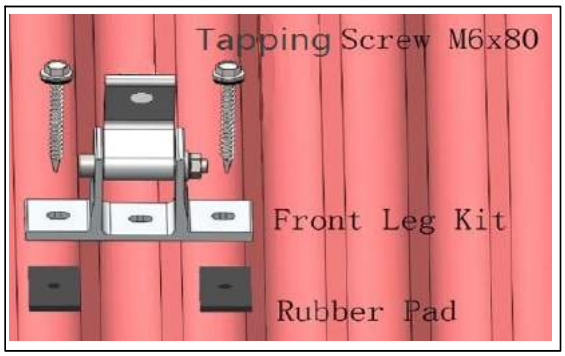

Step 3: Installing the Rear Leg

Determine the position of the rear leg according to your plans. Shim the rear leg with rubber, fix the rear leg to the rafter using 2pcs st6.3*80 tapping screws.

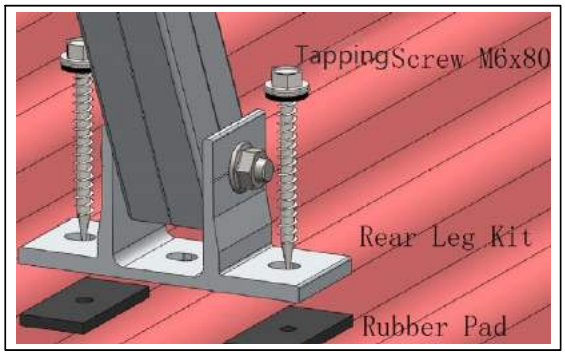

Finsh the remaining of the front leg and rear leg to the rafters according to your plans. please make sure the legs are in one line.

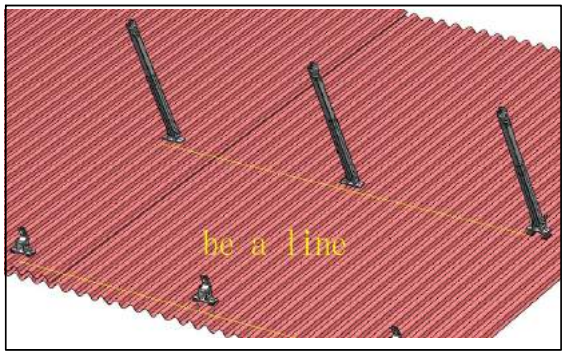

Loosen the 2 Hex screws in the rear leg and adjust the length of rear legs as per demanding angle(recommended torque is 15-20Nm).

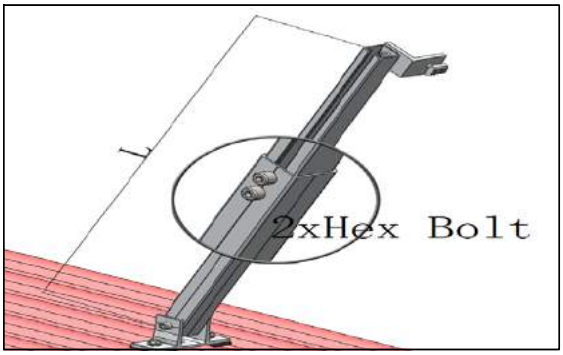

Step 4: Installing the rail

Connect the rail to rail clamp of the front leg and rear leg by inserting the T bolt into the rail channel ***(recommended torque is 15-20Nm).***

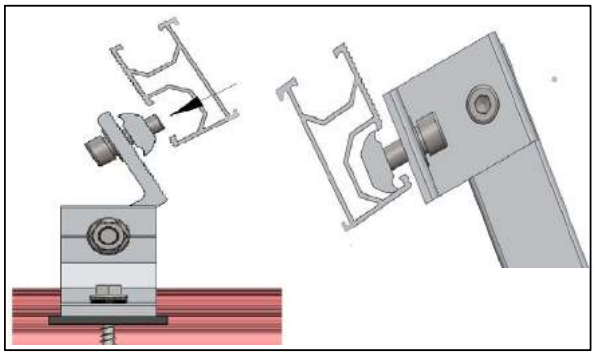

Installation of the splice to connect multiple rails together. Slide the splices on the rear side of the pre-assembled rails halfway to the side. Fasten the first M8 bolt firmly using the Allen key. Now slide the next rail segment into the splice. Tighten the second M8 bolt .The connection is finished.

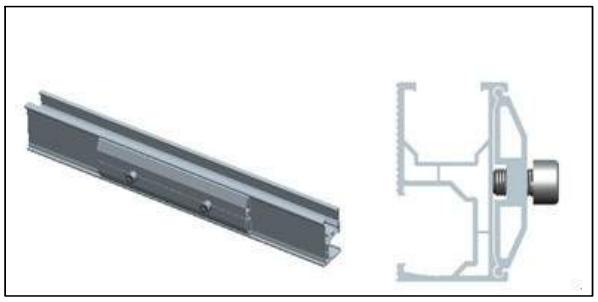

Step 5. Installing the End Clamp

Insert T bolt of the end clamp into the rail channel. Using a 6 mm hex driver/Allen key, secure the first solar panel to the railing starting as close to the end of the row as possible. A minimum of 50 mm between the end of the rail and edge of the first solar panel is required ***(recommended torque is 15-20Nm).***

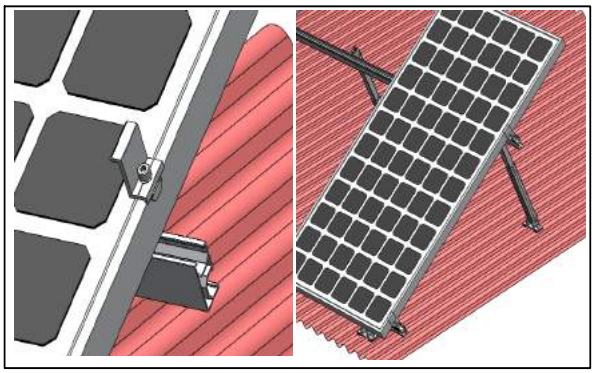

Step 6. Installing the Mid Clamp

Insert the T bolt of the mid clamp into the rail channel and position the clamp against the first panel frame. Hand-tighten the screw 2-3 turns to loosely hold the clamp in position.
Ensure the groundingclip is placed between the Fastensol rail and the frame of the panel ***(pls refer to the chapter [5.6.] if you have any questions about the grounding installation).***

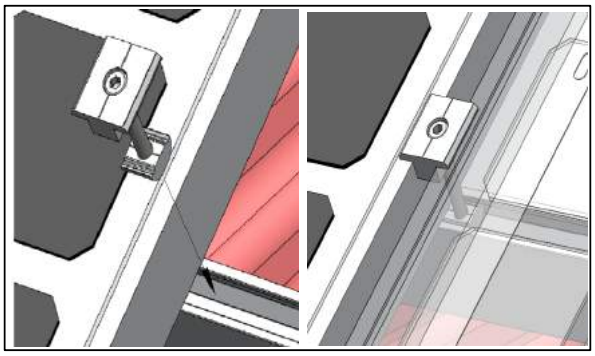

Step 7. Finish installing all the panels

Repeat doing last step till finish installing all the panels. Check the whole system and re-fix all outer screws after finish installing the panels.

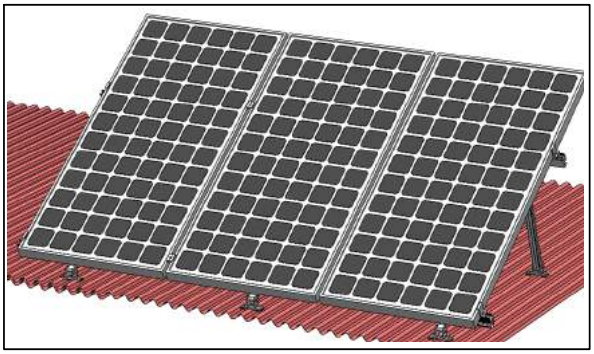

[5.4.] Installing tilt roof mounting system(fixed)

Step 1: Designing the module field

According to the specification of modules, calculate the length of rails, distance and span between two triangle brackets. Details and drawings is as below:

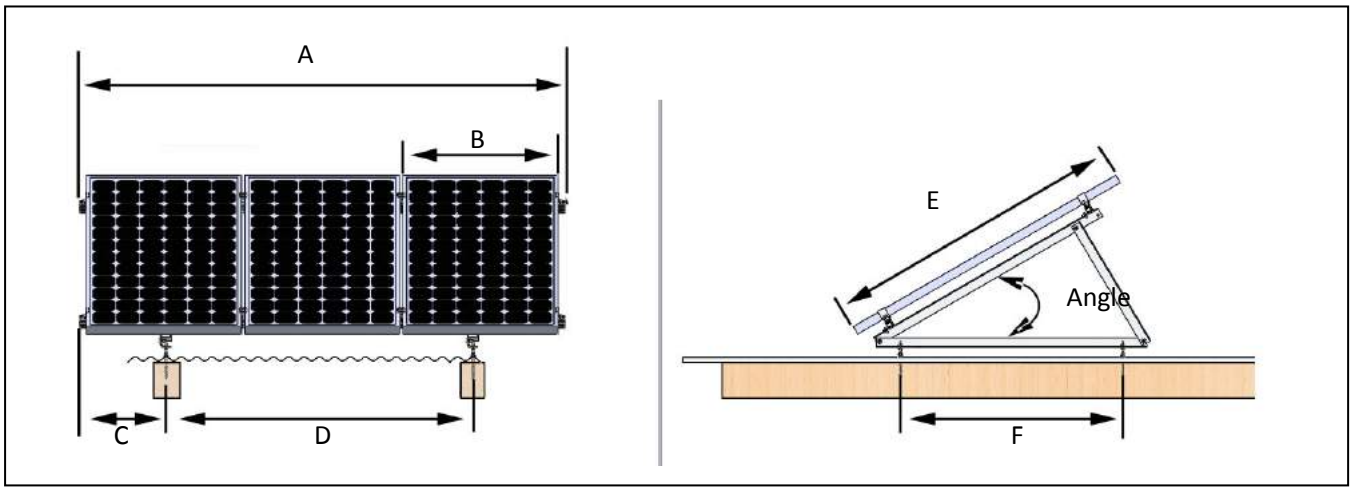

A	Rail Length= (Module width B +18)*Module Qty + 32 mm
B	Module Width
C	Cantilever Length <= Span D / 2
D	Triangle Bracket Span
E	Module Length
F	Foundation Bolts Spacing, Please look the 2. 6 to plan

Step 2. Installing the triangle bracket

Fix the tri-bracket to the rafter using 2 pcs 6.3*80mm tapping screws.

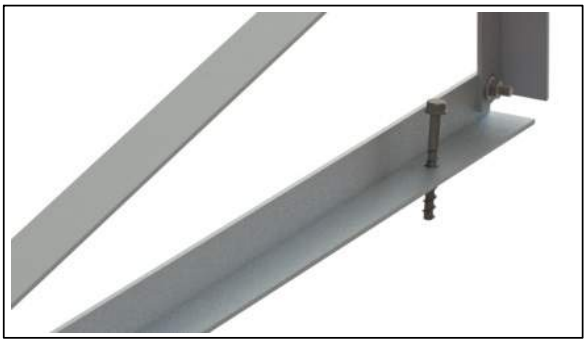

Fix the tri-bracket to the rafter using 2 pcs hanger bolt.

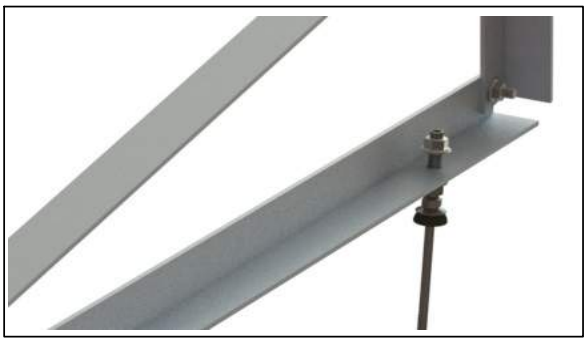

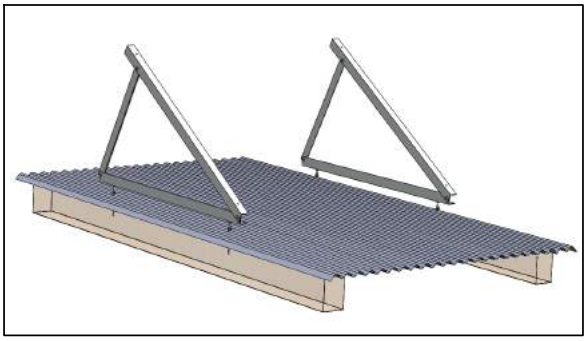

Step 3. Installing the Rail

Connect the rail to L connector of the tri-bracket by inserting the T-clip into the rail channel ***(recommended torque is 15-20Nm).***

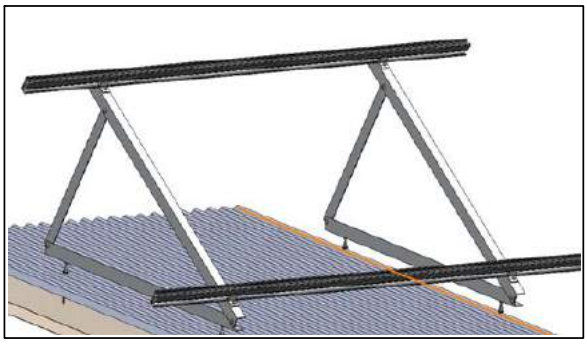

Installation of the splice to connect multiple rails together. Slide the splices on the rear side of the pre-assembled rails halfway to the side. Fasten the first M8 bolt firmly using the Allen key. Now slide the next rail segment into the splice. Tighten the second M8 bolt .The connection is finished.

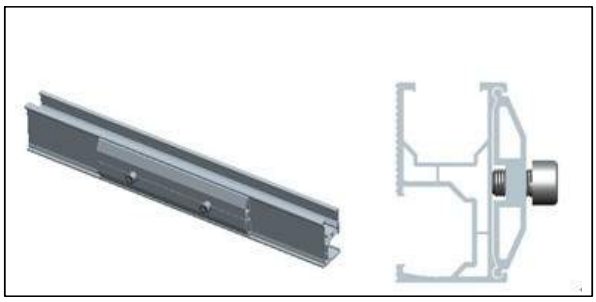

Step 4. Installing the End Clamp

Insert T-clip of the end clamp into the rail channel. Using a 6 mm hex driver/Allen key, secure the first solar panel to the railing starting as close to the end of the row as possible. A minimum of 50 mm between the end of the rail and edge of the first solar panel is required***(recommended torque is 15-20Nm)***.

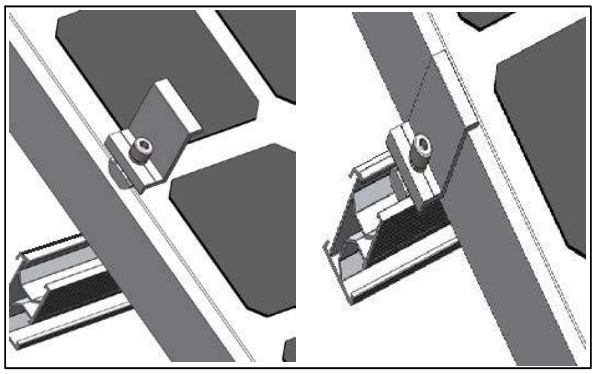

Step 5. Installing the Mid Clamp

Insert the T-clip of the mid clamp into the rail channel and position the clamp against the first panel frame. Hand-tighten the screw 2-3 turns to loosely hold the clamp in position. Ensure the EarthLock washer is placed between the Fastensol rail and the frame of the panel ***(pls refer to the chapter [5.6.] if you have any questions about the grounding installation).***

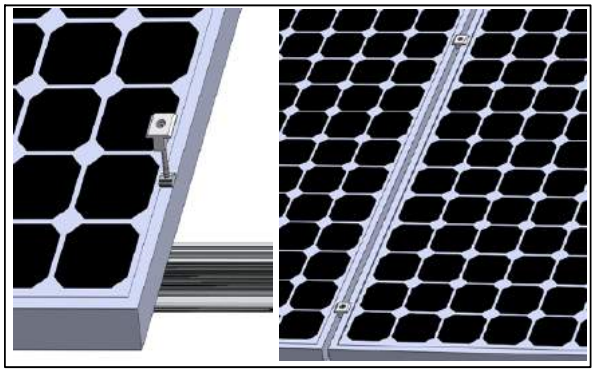

Step 6. Finish installing all the panels

Repeat doing last step till finish installing all the panels. Check the whole system and re-fix all outer screws after finish installing the panels.

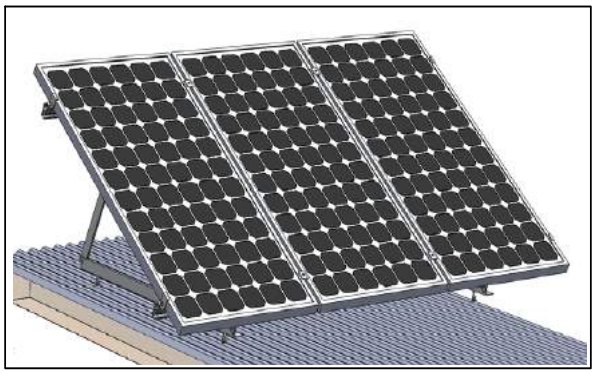

[5.5.] Installing Klip-lok roof moutning system

Step 1. Determine the type of concealed roof

The best way to identify the type of concealed roof installed is to check the label normally located underneath the roofing sheet. Otherwise, you can contact the builder or check the building plan to find out the exact type of the roofing sheet.

THE USE OF THE KLIP-LOK TYPE BRACKET IS NOT ACCREDITED ON ANY OTHER ROOF TYPES THAN THE FOUR LISTED BELOW.

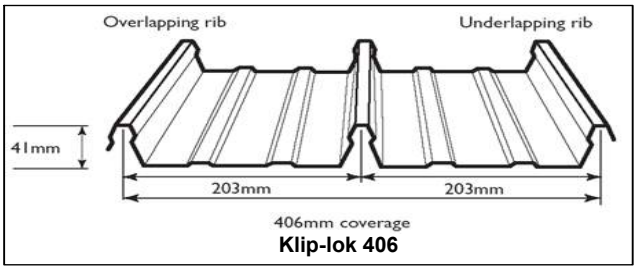

Klip-lok 406

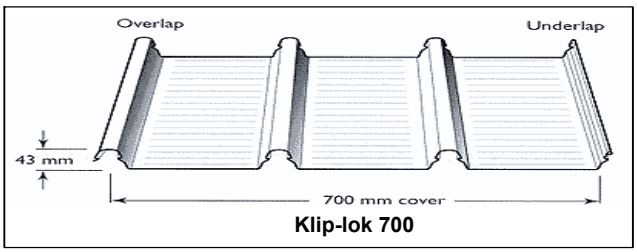

Klip-lok 700

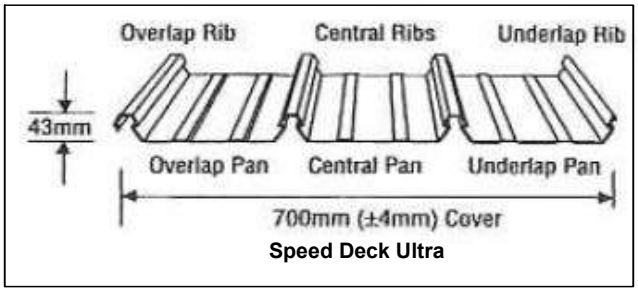

Speed Deck Ultra

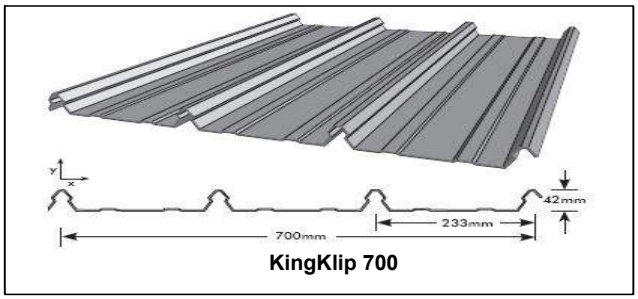

KingKlip 700

Step 2. Installing the stand seam roof clamp

Installing the Klamp 406

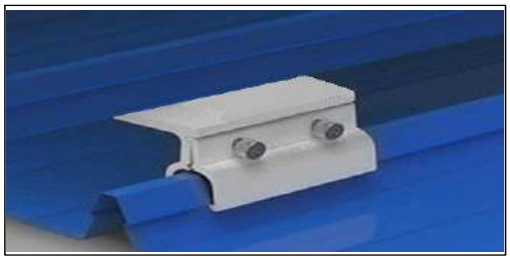

Installing the Klamp 700

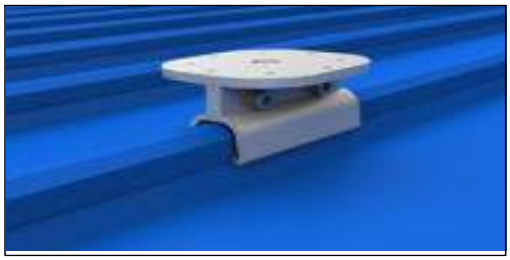

Step 3. Installing the End Camp

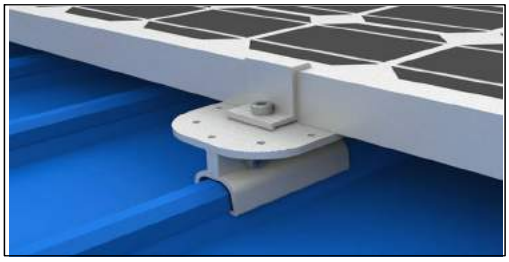

Step 4. Installing the Mid Camp

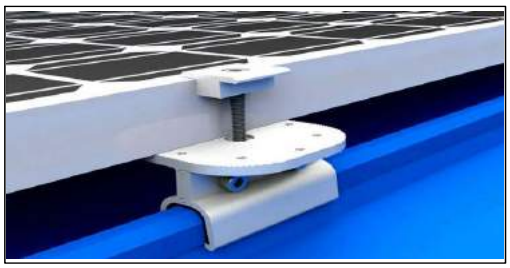

Step 5. Finish installing all the panels

Repeat doing last step till finish installing all the panels. Check the whole system and re-fix all outer screws after finish installing the panels.

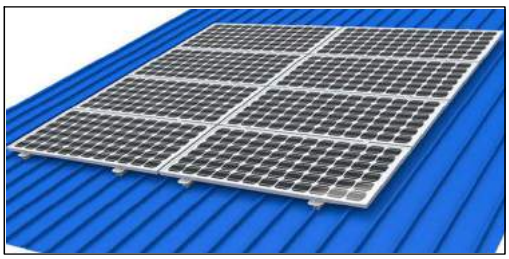

Also, you could connect the tilt front leg and rear leg with the klip-lok roof clamps (***pls refer to the chapter of the [5.3.]Installing tilt roof mounting system(adjustable).***

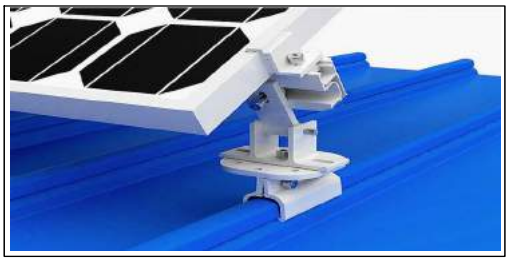

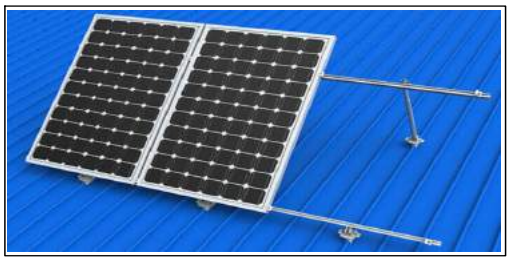

[5.6.] Grounding

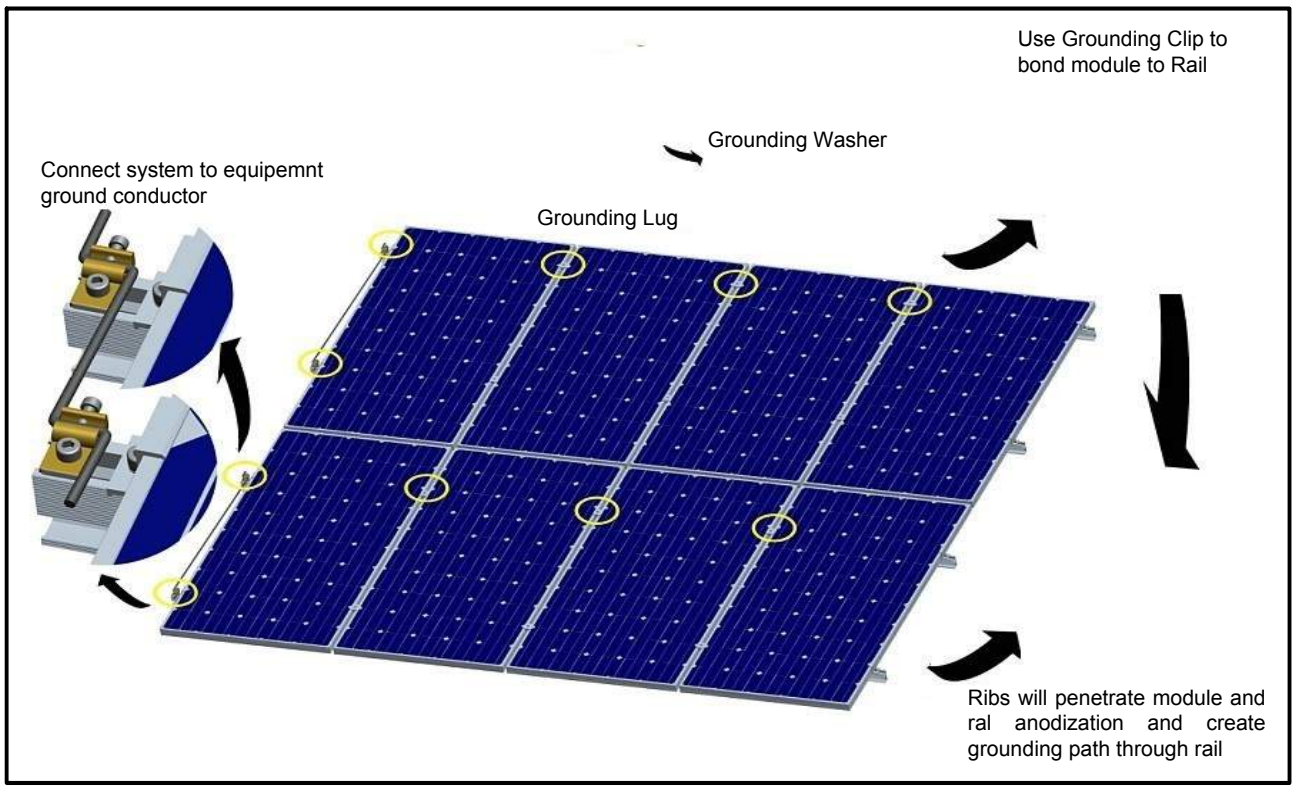

[5.7.] Installing Isolator Bracket

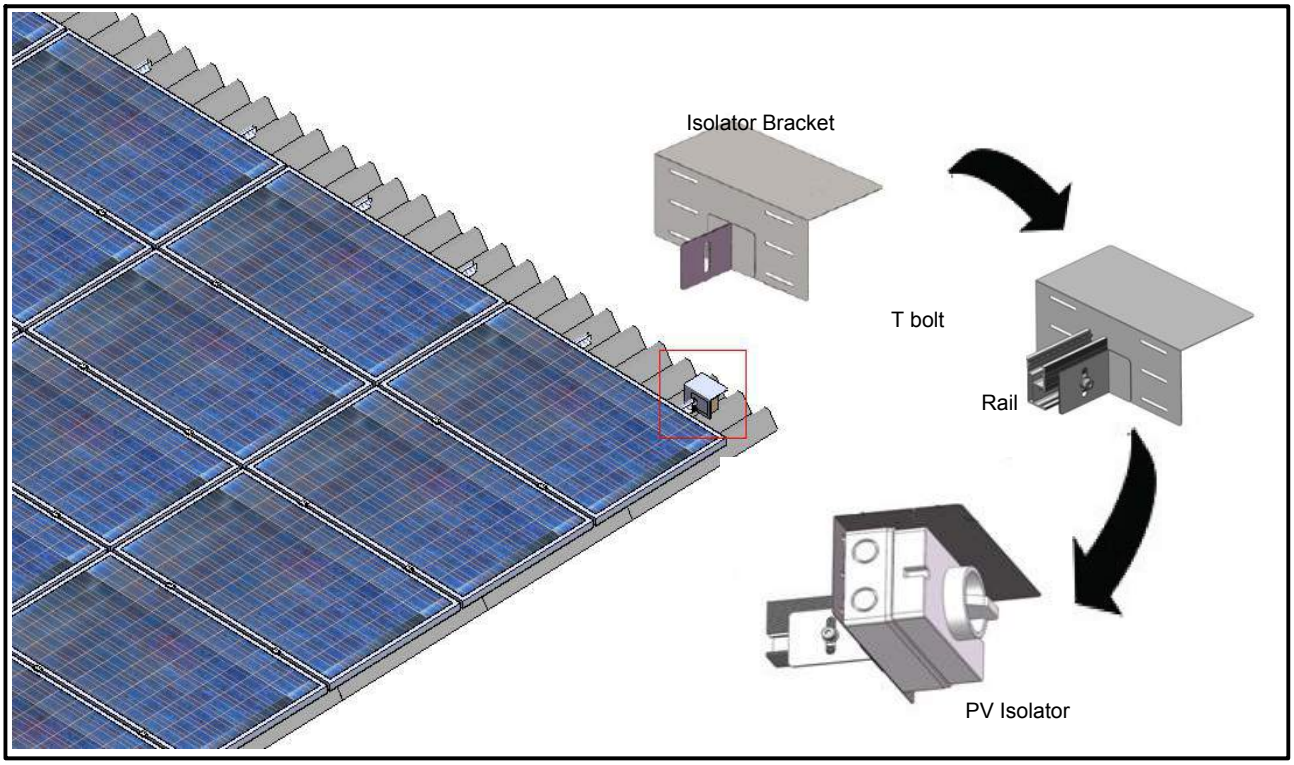

WARRANTY

12 year limited Product Warranty, 5 year limited Finish Warranty

Fastensol co. Ltd warrants to the original purchaser ("Purchaser") of product(s) that it manufactures ("Product") at the original installation site that the Product shall be free from defects in material and workmanship for a period of ten (10) years, except for the anodised finish, which finish shall be free from visible peeling, or cracking or chalking under normal atmospheric conditions for a period of five (5) years, from the earlier of 1) the date the installation of the Product is completed, or 2) 30 days after the purchase of the Product by the original Purchaser ("Finish Warranty").

The Finish Warranty does not apply to any foreign residue deposited on the finish. All installations in corrosive atmospheric conditions are excluded. The Finish Warranty is VOID if the practices specified by AAMA 609 & 610-02 – "Cleaning and Maintenance for Architecturally Finished Aluminum" (www.aamanet.org) are not followed by Purchaser. This Warranty does not cover damage to the Product that occurs during its shipment, storage, or installation.

This Warranty shall be VOID if installation of the Product is not performed in accordance with Fastensol's written installation instructions, or if the Product has been modified, repaired, or reworked in a manner not previously authorized by Fastensol IN WRITING, or if the Product is installed in an environment for which it was not designed. Fastensol shall not be liable for consequential, contingent or incidental damages arising out of the use of the Product by Purchaser under any circumstances.

If within the specified Warranty periods the Product shall be reasonably proven to be defective, then Fastensol shall repair or replace the defective Product, or any part thereof, in Fastensol's sole discretion. Such repair or replacement shall completely satisfy and discharge all of Fastensol's liability with respect to this limited Warranty. Under no circumstances shall Fastensol be liable for special, indirect or consequential damages arising out of or related to use by Purchaser of the Product.

Manufacturers of related items, such as PV modules and flashings, may provide written warranties of their own. Fastensol's limited Warranty covers only its Product, and not any related items.

CONSUMER GUARANTEES

In addition to our Warranty against Defects, the Frame also comes with guarantees that cannot be excluded under the Australian Consumer Law (**Consumer Guarantees**).

In the event that the Frame fails to satisfy a Consumer Guarantee, you are entitled to a replacement or refund for a major failure and compensation for any other reasonably foreseeable loss or damage. You are also entitled to have the Frame repaired or replaced if the Frame fails to be of acceptable quality and the failure does not amount to a major failure.

Please note that in addition to the rights and remedies set out in this document, you may also have other rights and remedies available to you under the law.

CONTACT DETAILS

Xiamen Fasten Solar Technology Co.,ltd

Address: *Room4B , No.16 Xiangxing 3 Road, Huli Bonded District, Huli District, Xiamen, China 361006*

Sales and Service: 00*86-592-5685378*

Fax: 00*86-592-5215070*

Email: *info@fastensolar.com*

MAINTENANCE AND CLEANING

6005-T5 aluminium is largely maintenance free. Only in highly polluted or marine conditions is rinsing with clean water required, during scheduled panel cleaning.

REFERENCES

AS/NZS 1170.2:2011/Amdt 2:2012 on wind actions

AS/NZS16641.1:1997 on aluminium structures

AS1720.1:2012 on timber structures AS/

NZS4600:2005 on cold-formed steel structures

AS3566-2011, self-drilling screws for the building

and construction industries.

Don Moore & Associates
Consulting Structural & Civil Engineers

20 April, 2016 Reference 2169.15

Xiamen Fasten Solar Technology Co., Ltd
31 Xiangxing 1st Road
Huli District 361006 Xiamen
China

Dear Sirs

FASTEN SOLAR T RAIL 2 FOR PITCHED ROOFS

As requested we have calculated the Maximum Fixing Spacing's for Fasten Solar Rail 2 as outlined in the attached Tables.

The tables have been calculated for Australian conditions based on the following criteria:-

- Wind Loads are in accordance with AS Code 1170.2:2011.
- Wind average recurrence interval of 500 years.
- Wind Terrain Category 2.
- Shielding and topographic multipliers, Ms and Mt taken as unity.
- Racks mounted on roofs of enclosed buildings of nominal rectangular shape.
- Roof slopes from 0 degrees up to 45 degrees from horizontal.
- Maximum solar panel length of 2.00 metres.
- Maximum solar panel width of 1.20 metres.
- Minimum of 2 rails per panel.
- Maximum panel weight of 15 kilograms per square metre.
- Roof structure to be checked and certified as suitable for applied rack loads prior to installation.
- Solar panels to be certified by Manufacturer as able to resist wind loads in accordance with AS Code 1170.2:2011.

I certify that that installations in accordance with these attached Tables will be structurally sufficient for Australian conditions provided the above conditions are adhered to.

Yours faithfully,

Don Moore FIE Aust. FIStructE. CPEng. NER.
Registered Building Practitioner No. EC-1106

11 Oak Street, Hawthorn Victoria 3122 Australia • **Telephone:** 03 9853 2323 • **Facsimile**: 03 9853 2324
• **Email:** dmoore@donmooreassociates.com.au • **Web:** www.donmooreassociates.com.au • **Mobile:** 0412 392 933
Charlett & Moore Pty Ltd ABN 27 004 859 956

Don Moore & Associates
Consulting Structural & Civil Engineers

30 May, 2016 Reference 2169.15

Xiamen Fasten Solar Technology Co., Ltd
31 Xiangxing 1st Road
Huli District 361006 Xiamen
China

Dear Sirs

FASTEN SOLAR T RAIL 2 FOR FLAT METAL ROOFS

As requested we have calculated the Maximum Fixing Spacing's for Fasten Solar Rail 2 as outlined in the attached Tables.

The tables have been calculated for Australian conditions based on the following criteria:-

- Wind Loads are in accordance with AS Code 1170.2:2011.
- Wind average recurrence interval of 500 years.
- Wind Terrain Category 2.
- Shielding and topographic multipliers, Ms and Mt taken as unity.
- Racks mounted on roofs of enclosed buildings of nominal rectangular shape.
- Roof slopes from 0 degrees up to 45 degrees from horizontal.
- Maximum solar panel length of 2.00 metres.
- Maximum solar panel width of 1.20 metres.
- Minimum of 2 rails per panel.
- Maximum panel weight of 15 kilograms per square metre.
- Roof structure to be checked and certified as suitable for applied rack loads prior to installation.
- Solar panels to be certified by Manufacturer as able to resist wind loads in accordance with AS Code 1170.2:2011.

I certify that that installations in accordance with these attached Tables will be structurally sufficient for Australian conditions provided the above conditions are adhered to.

Yours faithfully,

Don Moore FIE Aust. FIStructE. CPEng. NER.
Registered Building Practitioner No. EC-1106

11 Oak Street, Hawthorn Victoria 3122 Australia • **Telephone:** 03 9853 2323 • **Facsimile**: 03 9853 2324
• **Email:** dmoore@donmooreassociates.com.au • **Web:** www.donmooreassociates.com.au • **Mobile:** 0412 392 933
Charlett & Moore Pty Ltd ABN 27 004 859 956