JCDECAUX
LAND ADJOINING THE A33
PROPOSED DOUBLE SIDED ILLUMINATED ADVERTISEMENT DISPLAY BOARD

STAGE 1/2 - ROAD SAFETY AUDIT

JUNE 2022

the journey is the reward

Report title:	**JCDecaux** **Land Adjoining the A33** **Proposed Double Sided Illuminated Advertisement Display Board** **Stage 1 - Road Safety Audit**
Date:	**June 2022**
Document reference and revision:	**S/JCDReading.1-2.6 Rev A**
Prepared by:	**Martyn Parr - Mayer Brown Ltd**
Approved by:	**John Reid - Mayer Brown Ltd**
On behalf of:	**JCDecaux**
Status:	**Final**

Mayer Brown Limited, Lion House, Oriental Road, Woking, Surrey GU22 8AR
Telephone 01483 750508 Fax 01483 750437 wokingoffice@mayerbrown.co.uk www.mayerbrown.co.uk

JCDecaux

Land Adjoining the A33

Proposed Double Sided Illuminated Advertisement Display Board

Stage 1/2 - Road Safety Audit

List of Contents

Sections

1 Introduction 1

2 Items Raised at Previous Road Safety Audits 3

3 Items Raised at the Stage 1/2 Road Safety Audit.....4

4 Audit Team Statement.....5

Appendices

APPENDIX A: Site Location Plan

APPENDIX B: Supplemental Information Provided for Audit Relating to the Proposed A33 Site

APPENDIX C: Supplemental Information Provided for Audit Relating to the A33 Approved Site

1 Introduction

1.1 This report results from a Stage 1/2 Road Safety Audit carried out following instructions from JCDecaux, on a proposed double sided illuminated advertisement display board, on land adjoining the A33, adjacent to Marshalls Volkswagen dealership.

1.2 As advised by the Design Team, the proposals subject to this Audit comprise of: *"a double sided 48 sheet display in a 'V' format. The advertisement displays will be illuminated and show only static images that change every 10 seconds, and which will switch off between 11:59pm and 6:00a.m. The max night time luminance will be 300 Cdm2".*

1.3 The A33 adjacent to the proposed installation is dual carriageway and is subject to a 40mph speed limit. The junction adjacent operates as a 'left in', left' out arrangement and an uncontrolled crossing facility is provided for both pedestrians and pedal cyclists using the shared-use pedestrian/cycle facility alongside the A33.

1.4 This junction provides both vehicular and pedestrian access to several large commercial developments, a number of these are currently motor vehicle showrooms.

1.5 The Road Safety Audit took place on during June 2022.

1.6 The Overseeing Organisation is Reading Borough Council.

1.7 The Road Safety Audit comprised an examination of the drawings and information provided by Mr Martin Stephens at JCDecaux (Design Team), given as **Appendix B** in this report.

1.8 The Road Safety Audit Team membership was as follows:

Audit Team Leader

Martyn Parr MSoRSA, MCIHT, HECoC
Road Safety Manager – Mayer Brown Limited

Audit Team Member

John Reid MSc, DipHTE, MCIHT, FSoRSA, MITAI, HECoC
Technical Director (Safety) – Mayer Brown Limited

1.9 A site visit was undertaken on 6th June 2022 from 15:15hrs onwards, during which the weather was overcast, and the existing road surface was dry. Traffic conditions were moderate, pedestrian numbers were low. No pedal cycles were observed during the site inspection.

1.10 The terms of reference of the Road Safety Audit follow the principles of GG 119.

1.11 The Audit Team are not advised of any Departures from Standard.

1.12 The Audit Team are requested by the Design Organisation to review recorded collisions in the vicinity of the proposed installation and assess the causation factors of collisions over the previous five years in relation to the Road Safety Audit.

1.13 As indicated on website 'Crash-Map', during the five-year period (2017-2021), one collision was recorded. It was a single vehicle collision, which appeared to have occurred when a driver travelling southbound towards the siting of the proposed installation, lost control and struck a wall and a lamp column. The collision occurred during January 2020 at 3am when the road surface was wet/damp. The injuries sustained by the driver were 'slight'.

1.14 Having considered the very low collision rate on this busy section of carriageway and having carefully inspected the site and adjacent highway links and roadside environment and observed road user behaviour, the Auditors do not consider there to be an existing road safety issue at this location.

1.15 Furthermore, due to the low collision rate and the details available to the Auditors regarding this collision, they are unable to positively determine with any certainty whether the proposed installation will have any material impact on collision rates. On this basis, the Auditors would recommend that a stage 4 Road Safety Audit is conducted in order to review any recorded collisions post installation of the works subject to this Audit.

2 Items Raised at Previous Road Safety Audits

2.1 The Audit team are not aware of any previous Road Safety Audits having been carried out on the scheme proposals.

3 Items Raised at the Stage 1/2 Road Safety Audit

3.1 Subject to the recommendation made in Section 1, paragraph 1.15 of this Audit report and having carefully inspected the site and adjacent highway links and roadside environment and observed road user behaviour and assessed the information provided by the Design Team (JCDecaux) the Auditors consider that no material increase in risk to road users will arise as a result of the proposed double sided illuminated advertisement display board, adjacent to the A33.

4 Audit Team Statement

Audit Team Statement

We certify that this Road Safety Audit has been carried out following the principles of GG119.

Road Safety Audit Team Leader

Martyn Parr – MSoRSA, MCIHT, HECoC
Road Safety Manager
Mayer Brown Limited
Lion House
Oriental Road
Woking
Surrey
GU22 8AR

Signed

Date 17/06/22

Road Safety Audit Team Member

John Reid - MSc, DipHTE, MCIHT, FSoRSA, MITAI, HECoC
Technical Director (Safety)
Mayer Brown Limited
Lion House
Oriental Road
Woking
Surrey
GU22 8AR

Signed

Date 20/06/22

APPENDIX A: Site Location Plan

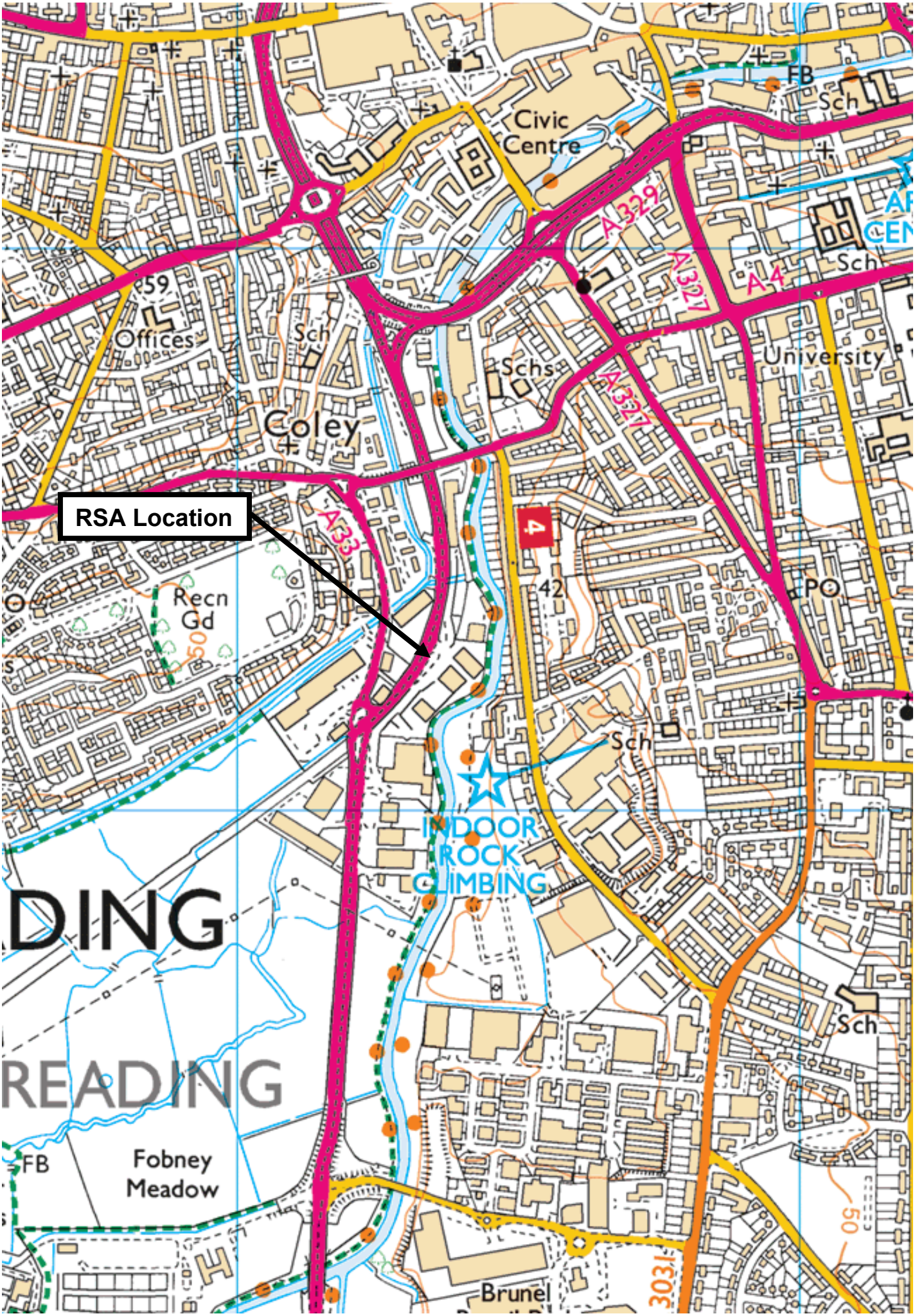
RSA Location
Civic Centre
FB
Sch
A329
A327
A4
Sch
University
Offices
Sch
Schs
Coley
A33
Recn Gd
42
PO
Sch
INDOOR ROCK CLIMBING
DING
READING
Sch
FB
Fobney Meadow
Brunel

APPENDIX B: Supplemental Information Provided for Audit Relating to the Proposed A33 Site

JCDecaux

Appendix A

Reading Borough Council

Proposal Site

Land adjoining the A33

Reading Borough Council
Working better with you

JCDecaux

READING
NEWTOWN
WEST READING
SOUTHCOTE
COLEY PARK
PROPOSAL SITE
WHITLEY

JCDecaux

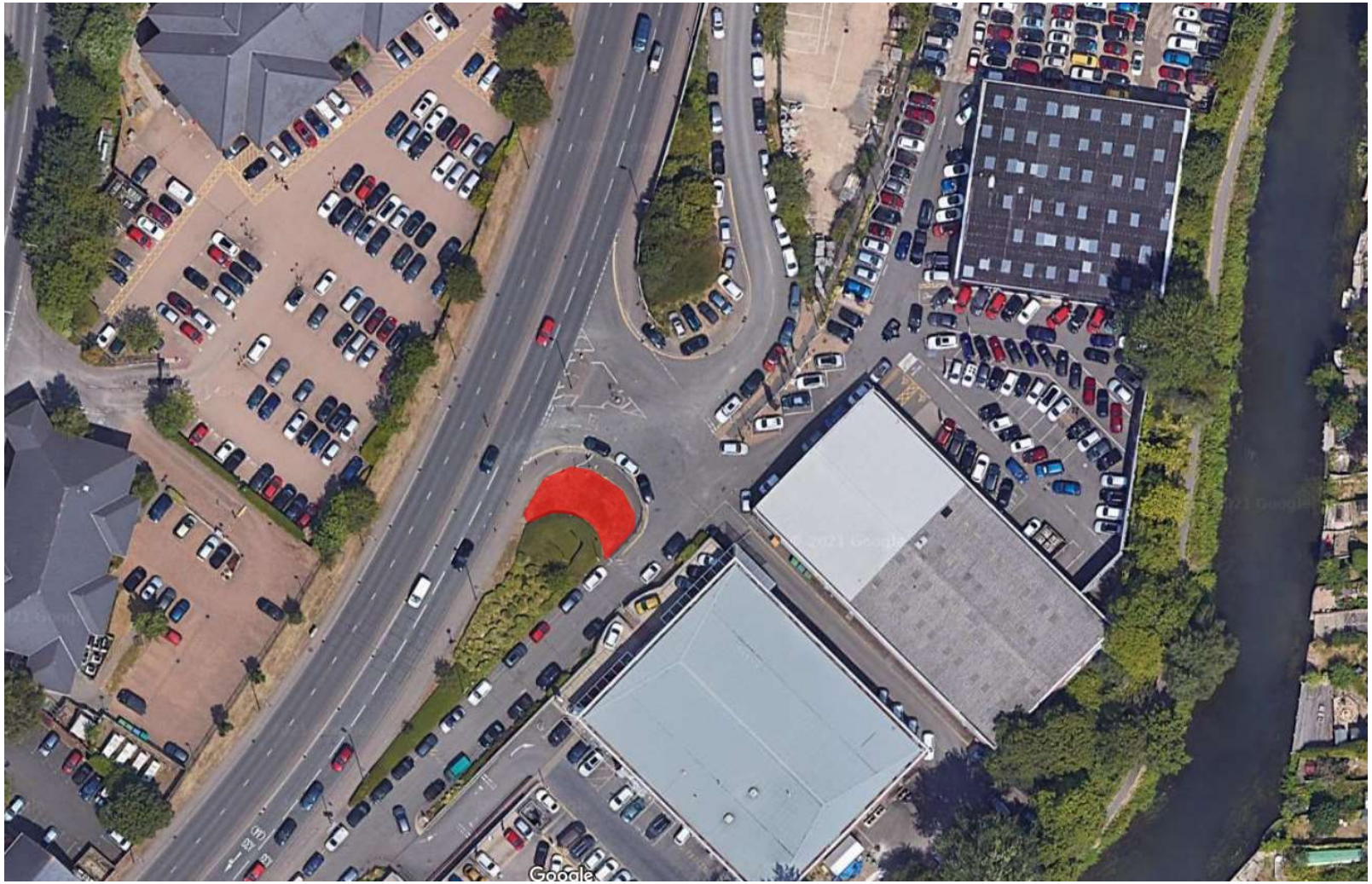

Hyundai Parts
Marshall Volkswagen
Cadogan House
ROSE KILN LANE
A 33
Towing Path
Co Const Bdy
Boro Const & Ward Bdy
El Sub Sta
Kennet
Display unit
Hardstanding
Promap
LANDMARK INFORMATION GROUP

JCDecaux

JCDecaux

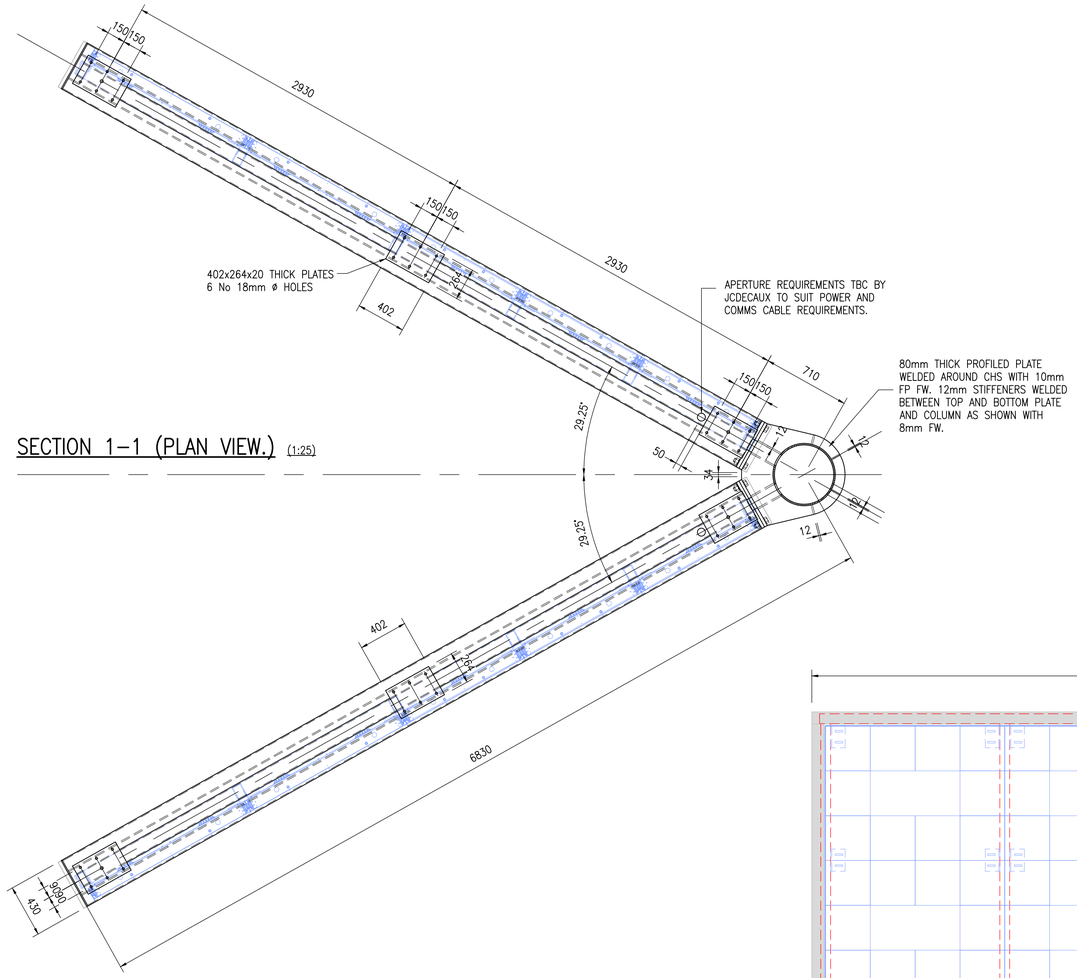

SECTION 1–1 (PLAN VIEW.) (1:25)

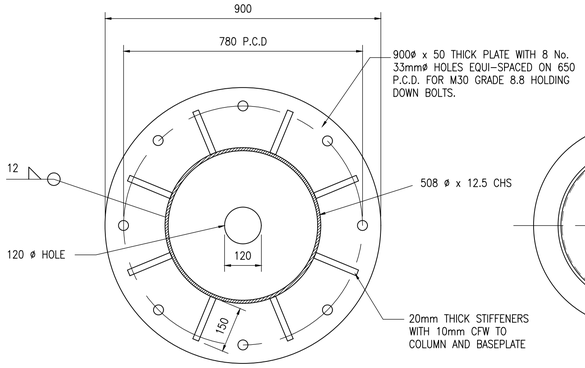

SECTION Z–Z [BASEPLATE]
(1:10)

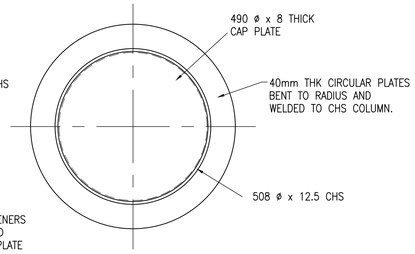

SECTION V–V [UPPER COLLARS]
(1:10)

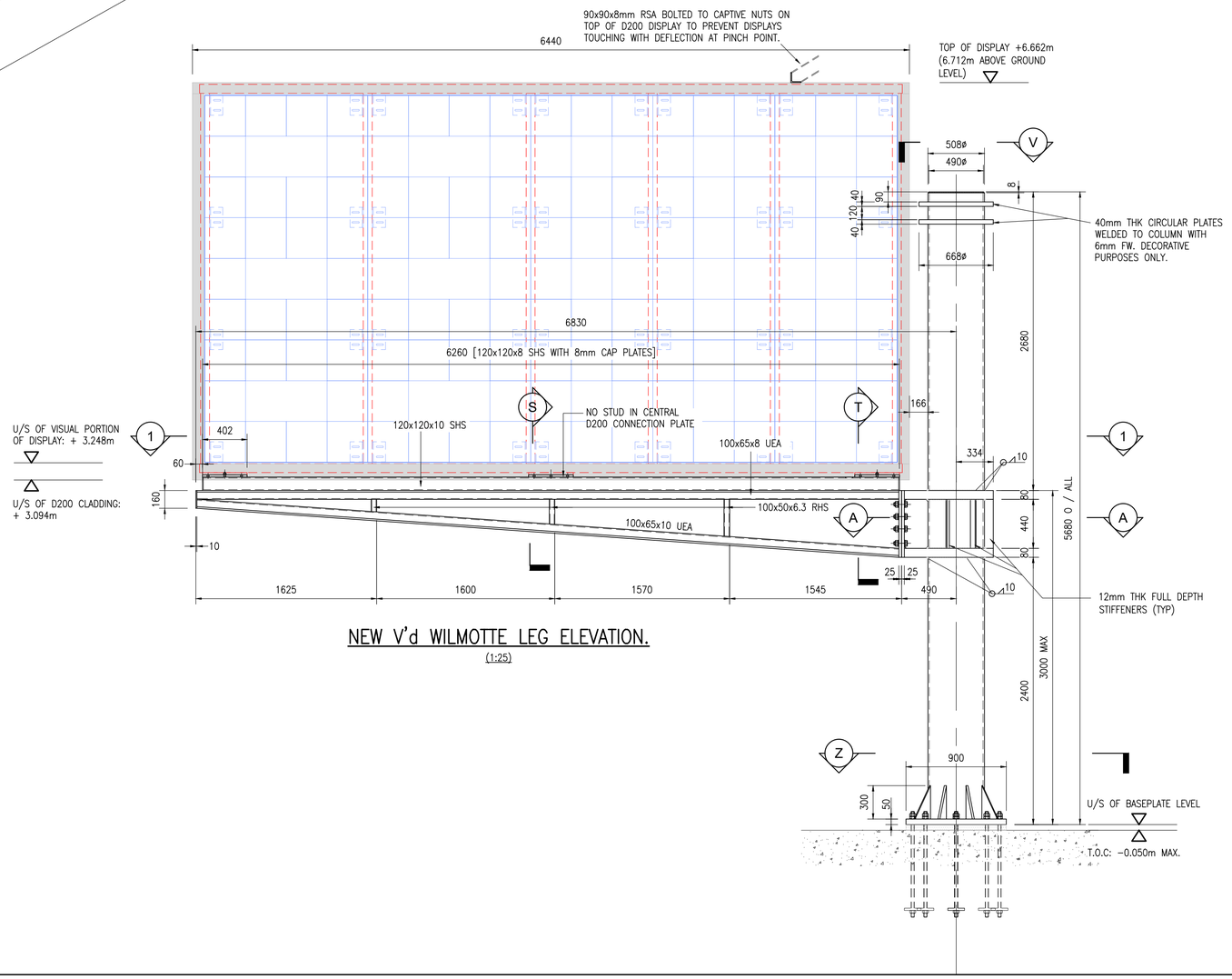

NEW V'd WILMOTTE LEG ELEVATION.
(1:25)

INSTALLATION AND ANTICIPATED DEFLECTIONS

DUE TO THE NATURE OF THE STRUCTURE I.E. A CANTILEVER SYSTEM VISIBLE DEFLECTIONS/ROTATIONS ARE ANTICIPATED. INCREASING MEMBER SIZE HAS A LIMITED REDUCTION IN THESE DEFLECTIONS PAST A CERTAIN POINT AND IT IS THEREFORE RECOMMENDED THAT DEFLECTIONS/ROTATIONS ARE PARTIALLY MITIGATED THROUGH INSTALLATION PROCEDURES. IT IS RECOMMENDED A LEVELLING AND SHIMMING PROCEDURE SHOULD TAKE PLACE AFTER INSTALLATION OF THE CANTILEVER ARM AND AGAIN AFTER INSTALLATION OF THE DISPLAY TO ENSURE FINAL INSTALLED DISPLAY IS LEVEL.

General Notes

GENERAL NOTES

1. ALL DRAWINGS ARE TO BE READ IN CONJUNCTION WITH ALL RELEVANT ENGINEERS, ARCHITECTURAL AND SPECIALISTS DRAWINGS AND SPECIFICATIONS.
2. ALL LEVELS ARE IN METRES ABOVE ORDINANCE DATUM. ALL DIMENSIONS ARE IN mm, UNLESS NOTED OTHERWISE.
3. DO NOT SCALE FROM THE DRAWINGS. WORK TO FIGURES/DIMENSIONS ONLY. ANY DISCREPANCIES IN DIMENSIONS ARE TO BE REFERRED TO THE ENGINEER BEFORE WORK COMMENCES.
4. ALL WORK BY THE CONTRACTOR MUST BE CARRIED OUT IN SUCH A WAY THAT ALL CURRENT HEALTH AND SAFETY REQUIREMENTS ARE SATISFIED.
5. ALL WORK BY THE CONTRACTOR MUST BE CARRIED OUT IN COMPLIANCE WITH THE REQUIREMENTS OF THE RELEVANT STATUTORY AUTHORITIES AND REGULATIONS.

STEELWORK GENERAL

1. OVERALL STRUCTURE AND ALL INDIVIDUAL STEELWORK COMPONENTS TO COMPLY WITH BS:EN1090–2 EXECUTION CLASS EXC 2.
2. ALL STEELWORK (EXCEPT HOLLOW SECTIONS) TO BE GRADE S355J2+N U.N.O TO BS EN10025–2:2004 (INCLUDING LATEST AMENDMENTS). ALL HOLLOW SECTIONS TO BE GRADE S355J2H TO BS EN10210–1:2006 (INCLUDING LATEST AMENDMENTS) UNLESS NOTED OTHERWISE.
3. ALL BOLT ASSEMBLIES TO BE GRADE 8.8 GALVANIZED.
4. ALL WELDS TO BE MIN. 8mm CONTINUOUS FILLET WELD. U.N.O.
5. SHOP DRAWINGS ARE TO BE SUBMITTED TO FURNESS PARTNERSHIP FOR COMMENT. COPIES TO BE MADE AVAILABLE 10 WORKING DAYS PRIOR TO COMMENCING FABRICATION.
6. HOT ROLLED STEELWORK DESIGNATED TO BE GALVANISED SHALL BE HOT DIP GALVANISED IN ACCORDANCE WITH BS EN ISO 1461:2009, WITH A MINIMUM MEAN COATING TO BE 85 MICRONS.
7. ALL STEELWORK TO BE FABRICATED AND ERECTED IN ACCORDANCE WITH THE NATIONAL STRUCTURAL STEELWORK SPECIFICATION FOR BUILDING CONSTRUCTION, 5th EDITION (BCSA & SCI PUBLICATION No. 203/02)
8. FABRICATOR TO SUPPLY ALL HOLDING DOWN BOLTS, TUBES, ANCHOR PLATES AND SHIM PLATES FOR LEVELING COLUMNS. BASEPLATES ARE TO BE FULLY GROUTED USING AN APPROVED NON–SHRINK GROUT BY THE CONTRACTOR AFTER THE STEELWORK HAS BEEN PLUMBED, LINED AND LEVELED AND ALL CONNECTIONS HAVE BEEN CHECKED FOR TIGHTNESS.
9. TEMPORARY STABILITY OF THE STRUCTURAL FRAME, DURING ERECTION SHALL BE THE RESPONSIBILITY OF THE FABRICATOR, AND SHALL BE MAINTAINED AT ALL TIMES BY THE USE OF TEMPORARY BRACING, SCAFFOLDING, PROPS AND STAYS AS NECESSARY UNTIL ERECTION IS COMPLETE.
10. NO ON SITE CUTTING/WELDING OF STEELWORK SHALL BE PERMITTED WITHOUT PRIOR WRITTEN APPROVAL FROM THE ENGINEER.

ALL STEELWORK TO BE HOT DIPPED GALVANISED. JCDECAUX TO CONFIRM ANY FINISH REQUIREMENTS OVER THE GALVANISING (PAINT etc.). ALL FINISHES MUST BE COMPATIBLE WITH GALVANISING.

THE DETAILS SHOWN ON THIS DRAWING ARE FOR USE AT THE BRIDGEWATER WAY, TRAFFORD SITE IN MANCHESTER ONLY AND SHOULD NOT BE USED ELSEWHERE WITHOUT FURNESS PARTNERSHIP APPROVAL.

THE D200 PRODUCT HAS BEEN DESIGNED BY OTHERS AND IS ASSUMED SUITABLE FOR INSTALLATION ON THE BRIDGEWATER WAY, TRAFFORD SITE IN MANCHESTER, WITH FIXINGS AT THE BASE ONLY. DESIGN RESPONSIBILITY FOR THE D200 PRODUCT REMAINS WITH JCDECAUX AND/OR THEIR DESIGN SUB–CONSULTANTS

Rev	Date	Comment	By	Check

Status Code: S0
Drawing Status: PRELIMINARY

This drawing may only be used for construction/manufacture if status is CONSTRUCTION

Furness Partnership
Consulting Structural/Civil Engineers
London: 20 Britton Street, London, EC1M 5TX tel: 020 7490 4353 fax: 020 7490 4354 e-mail: info@furnesspartnership.com
Bradford: The Paper Hall, Anne Gate, Bradford, BD1 4EQ tel: 01274 392092 e-mail: mail@furnesspartnership.com

Project
V'D DOUBLE WILMOTTE FOR D200 DIGITAL DISPLAYS. BRIDGEWATER WAY. TRAFFORD.

Drawing Title
V'd WILMOTTE LEG DETAIL FOR 2 D200 DIGITAL DISPLAYS. STEELWORK DETAILS SHEET 1

FP Job No.	Drawn	Date	Checked	Scale @ A1
L2474	R.C	12.06.2020	L.D.W	AS SHOWN.

PROJECT	OPERATOR	ZONE / VOLUME	LEVEL / LOCATION	FILE TYPE	ROLE	SHEET No.	Rev.
L2474	FP	XX	ZZ	DR	S	0551	-

APPENDIX C: Supplemental Information Provided for Audit Relating to the A33 Approved Site

Reading Borough Council
Working better with you

TOWN AND COUNTRY PLANNING ACT 1990
TOWN & COUNTY PLANNING (CONTROL OF ADVERTISEMENTS) (ENGLAND) REGULATIONS 2007

APPLICATION FOR CONSENT FOR DISPLAY OF AN ADVERTISEMENT

Colony Architects Ltd
250 South Oak Way
Green Park
Reading
RG2 6UG

Application No: 190523
Application type: Advertisement Consent

Applicant: Project Audio Visual

READING BOROUGH COUNCIL as Local Planning Authority **give consent** for the display of the following advertisements:

Proposal: Proposed two-sided 6m x 3m LED advertising hoarding on steel support

At: Land At A33 Spring Gardens Whitley Reading RG2 OGH

Subject to such conditions and for such reasons as may be attached

OTHER STATUTORY CONSENTS MAY BE REQUIRED
PLEASE READ THE NOTES ISSUED WITH THIS DECISION NOTICE

Date: 25-9-19

BCN
Head of Planning, Development
& Regulatory Services

Reading Borough Council
Working better with you

Application At: Land At A33 Spring Gardens Whitley Reading RG2 OGH
Application No: 190523
Application type: Advertisement Consent

CONDITIONS & REASONS

1. The Standard Conditions:

i. No advertisement is to be displayed without the permission of the owner of the site or any other person with an interest in the site entitled to grant permission.

ii. No advertisement shall be sited or displayed so as to:
a) endanger persons using any highway, railway, waterway, dock, harbour or aerodrome (civil or military);
b) obscure, or hinder the ready interpretation of, any traffic sign, railway signal or aid to navigation by water or air; or
c) hinder the operation of any device used for the purpose of security or surveillance or for measuring the speed of any vehicle.

iii. Any advertisement displayed, and any site used for the display of advertisements, shall be maintained in a condition that does not impair the visual amenity of the site.

iv. Any structure or hoarding erected or used principally for the purpose of displaying advertisements shall be maintained in a condition that does not endanger the public.

v. Where an advertisement is required under these Regulations to be removed, the site shall be left in a condition that does not endanger the public or impair visual amenity.

Reason: In accordance with Schedule 2, Regulation 2(1) of the Town and Country Planning (Control of Advertisements) (England) Regulations 2007.

2. This consent shall operate for a period of five years from the date of this notice.

Reason: By virtue of the Town and Country Planning (Control of Advertisements) (England) Regulations 2007

2. The development hereby permitted shall be carried out in accordance with the following approved plans:

Drawing No: 497-4-03-04 P4 - Elevations as proposed rev B
Drawing No: 497-4-02-01 P4 - Block plan as existing and proposed

Date: 25-9-19

BCN
Head of Planning, Development
& Regulatory Services

Reading Borough Council
Working better with you

Reason: As permission is granted in respect of the development as detailed in the approved plans only.

4. The maximum luminance from either side of the advertisement hereby approved shall not exceed 300 cd/m2.

Reason: To avoid glare, which could lead to danger to highway users. And/or in the interests of amenity in accordance with Core Strategy Policy CS20 and Sites and Detailed Policies document Policy DM12 and Emerging Local Plan (Reading Borough Local Plan (2019)) Policy TR1 and Policy TR3.

5. There advertising device hereby approved shall only display static imaging with no animated or video advertisements to be shown at any time.

Reason: To protect the visual amenity of highway users in accordance with the LDF Core Strategy Policy CS7 (Design and the Public Realm) LDF SDPD Policy DM12 (Access, Traffic and Highway-Related Matters) LDF SDPD Policy DM22 (Advertisements) and Emerging Local Plan (Reading Borough Local Plan (2019)) Polices CC7, TR3, and OU4.

6. Static advertisements shall not change more frequently than once every ten seconds on both sides of the double sided screen.

Reason: To protect the visual amenity and avoid excessive glare that could lead to a danger to highway users in accordance with the LDF Core Strategy Policy CS7 (Design and the Public Realm) LDF SDPD Policy DM12 (Access, Traffic and Highway-Related Matters) LDF SDPD Policy DM22 (Advertisements) and Emerging Local Plan (Reading Borough Local Plan (2019)) Policies CC7, TR3, and OU4.

INFORMATIVES

1. The local planning authority has worked positively and proactively with the applicant to resolve relevant matters to allow consent to be granted within the agreed extended timescale for the decision to be issued.

2. Your attention is drawn to the terms and conditions of this consent. Any development which is carried out but which differs materially from the approved plans and details, or does not comply with any condition(s) attached to the consent may result in the Council taking action to remedy the breach of planning control. If you are in any doubt please contact the Council.

Date: 25-9-19

BCN

Head of Planning, Development
& Regulatory Services

Reading Borough Council
Working better with you

3. i) The attention of the applicant is drawn to Section 59 of the Highways Act 1980, which enables the Highway Authority to recover expenses due to damage caused by extraordinary traffic.
ii) Any works affecting the Highway shall be in accordance with Reading Borough's Council's document "Guidance Notes for Activities on the Public Highway within the Borough of Reading". The applicant should note that compliance with this document is mandatory and licences to work on the Highway will only be issued if the requirements contained within it are met. A copy can be obtained from the Council's website.

Date: 25-9-19

BCN
Head of Planning, Development
& Regulatory Services

NOTES

APPEALS TO THE SECRETARY OF STATE

If you are aggrieved by the decision of the Council to refuse consent for the proposed display of advertisements or to grant it subject to conditions, then you can appeal to the Secretary of State under section 78 of the Town and Country Planning Act 1990 within 8 weeks of the date of this notice.

Appeals can be made online at: https://www.gov.uk/planning-inspectorate.
If you are unable to access the online appeal form, please contact the Planning Inspectorate to obtain a paper copy of the appeal form on tel: 0303 444 5000.

The Secretary of State can allow a longer period for giving notice of an appeal but will not normally be prepared to use this power unless there are special circumstances which excuse the delay in giving notice of appeal.

The Secretary of State need not consider an appeal if it seems to the Secretary of State that the local planning authority could not have granted planning permission for the proposed development or could not have granted it without the conditions they imposed, having regard to the statutory requirements, to the provisions of any development order and to any directions given under a development order.

If you intend to submit an appeal that you would like examined by inquiry then you must notify the Local Planning Authority and Planning Inspectorate (inquiryappeals@planninginspectorate.gov.uk) at least 10 days before submitting the appeal. Further details are on GOV.UK.

DELEGATED APPLICATION REPORT **Target Date: 25/9/19**

Application No: 190523/FUL

Address: Land at A33, Spring Gardens, Whitley, Reading

Proposal: Proposed two-sided 6m x 3m LED advertising hoarding on steel support

Case Officer: Anthony Scholes

1. **Site Description and Surrounding Area**

The site relates to land adjacent to the A33 (Basingstoke Road). The signage would be located approximately 87m from Lindisfarne Way and setback 0.6m from the A33. The proposed signage would be within a landscaped portion adjacent to the A33 and adjacent to the Kennet Island turn bus stop.

2. **Proposal**

The proposed includes the construction of a 8m high structure containing a 2m high steel support, with two 6m x 3m digital advertising as a double sided 'V' sign.

3. **Internal Consultations**

RBC Transport Development Control

No Objections, subject to conditions and informatives.

4. **External Consultees**

CCTV/ Thames Valley Police (TVP)

No objections

Neighbours

A site notice was erected on site, no objections have been received to date.

5. **Relevant Planning History**

None applicable.

6. **Equality Act 2010**

In determining this application, the Council is required to have regard to its obligations under the Equality Act 2010. However, there is no indication or evidence (including from consultation on the application) that the protected groups identified by the Act have or will have different needs, experiences, issues and priorities in relation to this particular

planning application. Therefore in terms of the key equalities protected characteristics it is considered there would be no significant adverse impacts as a result of the development.

7. Relevant Planning Policy and Guidance

The Town and Country Planning (Control of Advertisements) Regulations 2007 apply.

8. Relevant Policies

The application has been assessed against the following policies:

National Planning Policy Framework (2019)
Part 12: Achieving well designed places
Part 16: Conserving and Enhancing the Historic Environment

National Planning Practice Guidance
Advertisements

Reading Borough Local Development Framework Core Strategy (2008) (altered 2015)
CS7: Design and the Public Realm
CS33: Protection and Enhancement of the Historic Environment

Sites and Detailed Policies Document (2012) (Altered 2015)
DM4: Safeguarding Amenity
DM12: Access, Traffic and Highway-Related Matters
DM22: Advertisements

9. Appraisal

Legislative context

As set out above under the advertisement regulations factors relevant to public safety include highway safety and whether the adverts would hinder security or surveillance devices. In this instance, the key issue in this instance would be highways safety and public safety in relation to distraction of drivers, or opportunities for concealment points around such advertisements. In this instance, the proposed signage is located a sufficient distance from any junction, and conditions can be imposed which restrict the use of the signage in ways that could distract drivers. Additionally, the proposal is to be built on two steel supports allowing a clear view and no concealment points around the proposed sign.

Design and appearance

Policy DM22 (Advertisements) states that advertisements will not have a detrimental impact on public safety. It also specifies that the cumulative impact of adverts will be taken into account. Policy CS7 (Design) seeks that all development should create safe and accessible environments. Policy DM12 (Highway Matters) states that development will only be permitted where it is not detrimental to highway safety. Policy CS20 (Reading Transport Strategy) seeks to promote transport safety. The surrounding area is adjacent to a high speed road area, and contains no noteworthy structures.

The proposed sign would be located 2m above ground level at its lowest point (as the land slopes away from the road) the sign would be double sided and V-shaped being 6m in height and 3m in width. The proposed sign would be situated adjacent to the road, and be highly elevated above the adjoining public footpath. The overall footprint of the proposal is quite small. There are currently no other structures within the grass verge and landscaped section between Basingstoke Road and the bicycle/footpath adjacent. The proposed signage would be 8-9m above ground level, though there are no buildings, trees, or other structures surrounding the proposed sign and as such would not detract from their appearance. Given the open nature of the area, and lack of structures, vegetation, and overall setting, the proposed advertisement is considered to respect its setting in accordance with Policy DM22 and Emerging Policy OU4.

Finally, as this is to be the first digital sign approved on or around the A33, the proliferation, or cumulative impact of such signs is not considered to raise any concerns in this instance.

10. Conclusion

Having regard to the material considerations and all matters raised, the Local Planning Authority considers that the balance of considerations therefore weigh in favour of granting advertisement consent subject to conditions.

Recommendation

GRANT

Items to add to Planning Application

- Illumination for the panels will be below the limit set out in the Institute of Lighting Engineers (ILE) technical note number 5 "The brightness of illuminated advertisement", to ensure drivers are not distracted and so there is no adverse impact on highway safety. The intensity of the luminance of the advertisement shall be no greater than 1000Cdm2 during daylight hours and 300Cdm2 during the hours of darkness. This will be limited by the use of an appropriately calibrated and programmed light sensor attached to the controller system.

- The proposed panels will not have any intermittent light source, moving feature, animation or exposed cold cathode tubing, to ensure drivers are not distracted and so there is no adverse impact on highway safety.

- The frequency of change in the displayed image is no greater than 10 seconds, and a transition from one image to another whereby the ending display is phased out and its replacement phased in over a period a period of no more than 3 seconds, to ensure drivers are not distracted and so there is no adverse impact on highway safety.

- No visual effects of any kind to be permitted to accompany the transition between any two successive messages. The replacement image must not incorporate any fading, swiping or other animated transitional method.

Items to review:

Planning subject to the requirements of Regulation 14(7)(b) of the Town and Country Planning (Control of Advertisements) (England) Regulations 2007 which states that every grant of express consent is subject to the following standard conditions stipulated in Schedule 2 to the said Regulations:-

(i) No advertisement is to be displayed without the permission of the owner of the site or any other person with an interest in the site entitled to grant permission.

(ii) no advertisement shall be sited or displayed so as to endanger persons using any highway, railway, waterway, dock, harbour or aerodrome (civil or military).

(iii) no advertisement shall be sited or displayed so as to obscure, or hinder the ready interpretation of, any traffic sign, railway signal or aid to navigation by water or air.

(iv) no advertisement shall be sited or displayed so as to hinder the operation of any device used for the purpose of security or surveillance or for measuring the speed of any vehicle.

(v) any advertisement displayed, and any site used for the display of advertisements, shall be maintained in a condition that does not impair the visual amenity of the site.

(vi) any structure or hoarding erected or used principally for the purpose of displaying advertisements shall be maintained in a condition that does not endanger the public

(vii) where an advertisement is required under the Regulations to be removed, the site shall be left in a condition that does not endanger the public or impair visual amenity.

Reason: To conform with the requirements of the Town and Country Planning (Control of Advertisements) (England) Regulations 2007.

3 The proposed illuminated signs shall not have any intermittent light source, moving feature, animation or exposed cold cathode tubing unless such features are subsequently agreed in writing by the Local Planning Authority.

Reason: To ensure that the signage is not detrimental to public safety or local amenity

4 At all times when vehicles are attending the site for the purpose of installing, servicing or maintaining the signage hereby approved, the attending vehicles shall park, load and unload within the site boundary and away from the public highway.

Reason: To ensure that the installation of the signage does not disturb the safe and free flow of traffic along the public highway.

5 Illumination for the panels will be below the limit set out in the Institute of Lighting Engineers (ILE) technical note number 5 “The brightness of illuminated advertisement”, to ensure drivers are not distracted and so there is no adverse impact on highway safety. The intensity of the luminance of the advertisement shall be no greater than 1000Cdm2 during daylight hours and 300Cdm2 during the hours of darkness. This will be limited by the use of an appropriately calibrated and programmed light sensor attached to the controller system.

Reason: To ensure that the proposed display does not prejudice the amenities of the locality or the conditions of general safety along the neighbouring highway.

6 The sequential advertisements will not change more than once every 10 seconds and any sequential change between advertisements will take place over a period no greater than one second.

Reason: To ensure that the signage is not detrimental to public safety or local amenity