This drawing may be scaled with reference to the scale bar for planning application purposes only. Do not scale for any other purpose, use only annotated dimensions. All dimensions are to be checked by parties using the drawing, and any errors or omissions are to be reported to Weston & Co Architects Ltd.

Rev.	Date	Note	Author	Checked
A	26/04/23	Revised following RBC comments	IG	CTW

EXISTING BASEMENT B-03
EXISTING WINDOW W-B-04

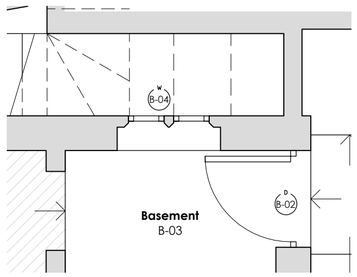

GENERAL ARRANGEMENT PLAN 1/50

Figure 01

Figure 02

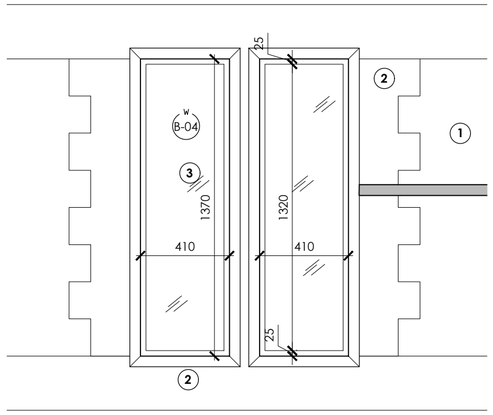

EXTERNAL ELEVATION 1/20

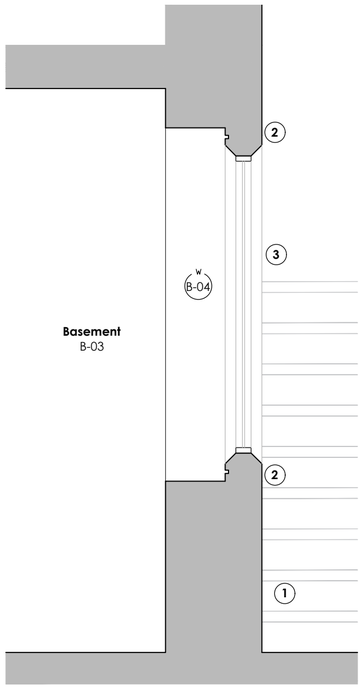

SECTION 1/20

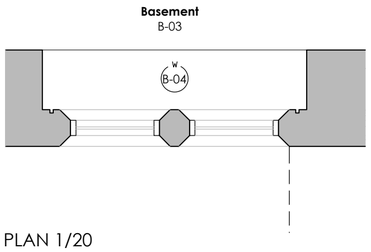

PLAN 1/20

PROPOSED FLAT 1 DINING ROOM
PROPOSED NEW WINDOWS W-B-04

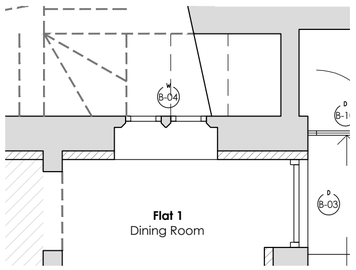

GENERAL ARRANGEMENT PLAN 1/50

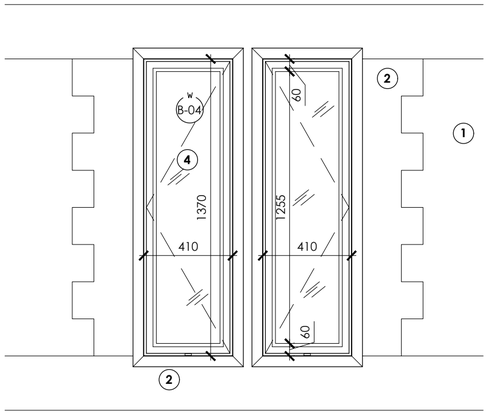

EXTERNAL ELEVATION 1/20

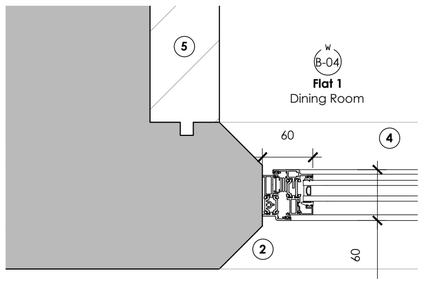

WINDOW JAMB DETAIL 1/5

MATERIAL KEY

1. Coarse stonework wall finish
2. Dressed stone splayed window surround
3. Dilapidated slim metal framed window
4. Proposed new slim-framed PPC aluminium heritage frame profile window, colour: off white
5. Proposed damp proofing & insulating dry-lining system

1:50 — 0 1 2 3 4 5m

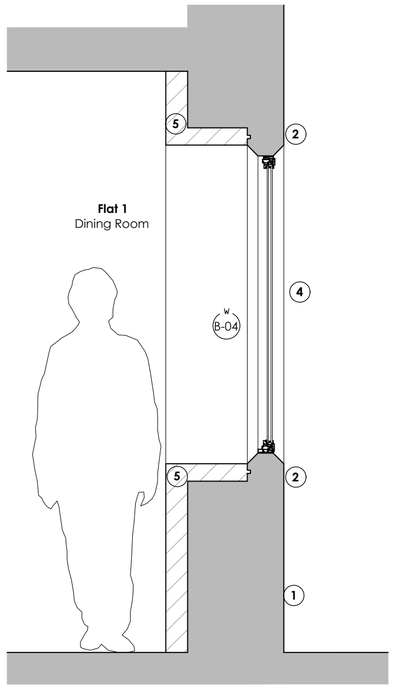

SECTION 1/20

Project	Refurbishment & Alterations Carlisle House, 118 Oxford Road Reading RG1 7NG			Drawing	Existing & Proposed Windows (4) W-B-04
				Job-Dwg Number	18009-PL-41 — Rev. A
Client	Turner Property Ltd				
Status	Planning				
Scale	1/5 , 1/20 & 1/50	Sheet Size	A2		
Author	IG	Checked	CTW	Date	17/04/2023

WESTON + CO ARCHITECTS

Watlington House
44 Watlington Street
Reading, RG1 4RJ
T. 0118 375 0252

www.weston-co.com

© Weston & Co Architects Ltd.